Inset Hood **DHL755BUC**

Ventilation Spec Sheet

BOSCH
Invented for life

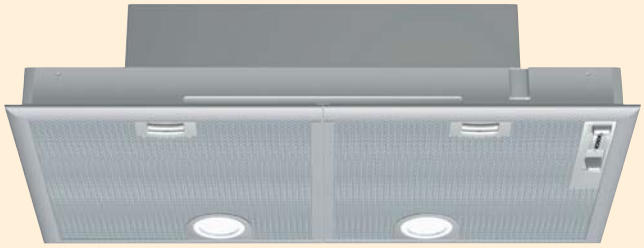

DHL755BUC

Product Name	**Custom Inset Hood**
Model Number	**DHL755BUC**
Appearance	
Width	29" up to 36"
Style	Custom Inset Hood
Controls	4-Speed Slider Switch
Lighting	2 Halogen
Color Options	Stainless Steel
Technical	
Blower Included	400 CFM
Ducting Direction	Vertical
Duct Size	6"
Recirculation	Optional
Filters	2 Dishwasher safe
Electrical Requirements	120 VAC, 60Hz
Amps	15A

Features & Benefits

- Custom solution for Versatile Design
- 400 CFM Powerful Ventilation
- 4-speed Slider Control
- Optional Recirculation

Dimensions:

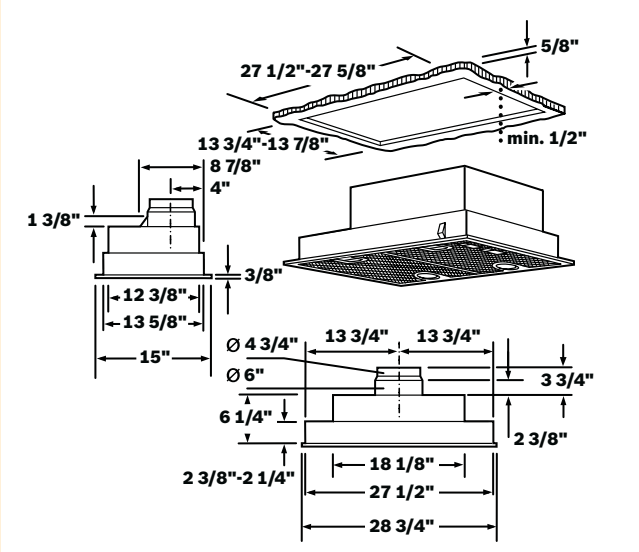

Ventilation is UL approved. Notes: All height, width and depth dimensions are shown in inches. *Please refer to installation instructions prior to making cutout. BSH reserves the absolute and unrestricted right to change product materials and specifications, at any time, without notice. Consult the product's installation instructions for final dimensional data and other details. Applicable product warranty can be found in accompanying product literature or you may contact your account manager for further details.

For more information on our entire line of products, go to boschappliances.com or call 1-800-944-2904.

Copyright ©2007 BSH Home Appliances Corporation. All rights reserved. Bosch is a registered trademark of Robert Bosch GmbH.

63-136-0507B Litho Date: 7/07