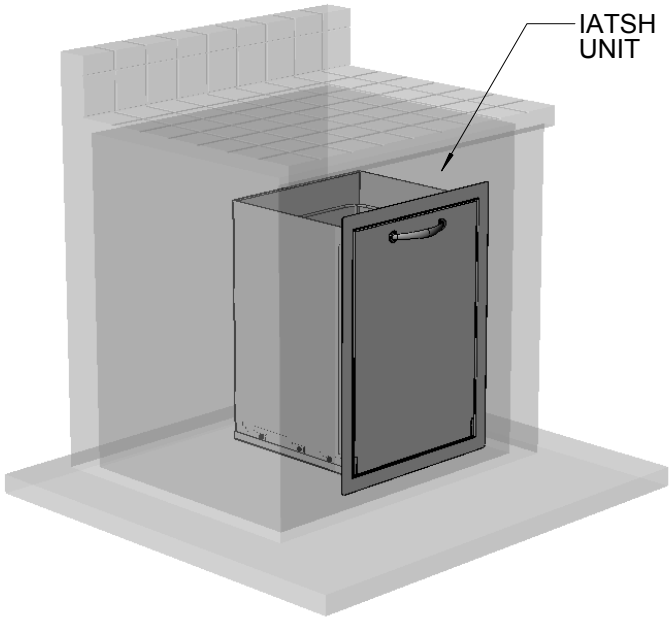

IATSH TYPICAL INSTALLATION

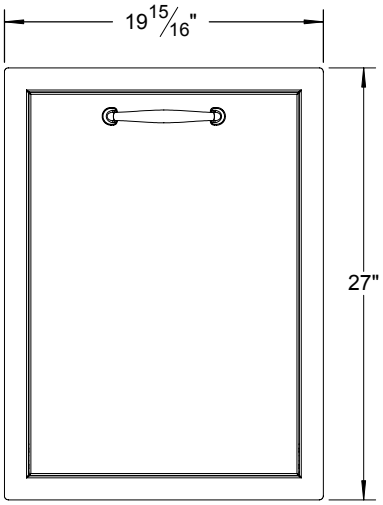

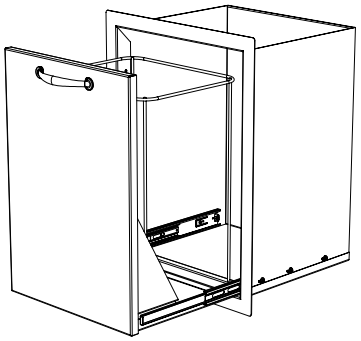

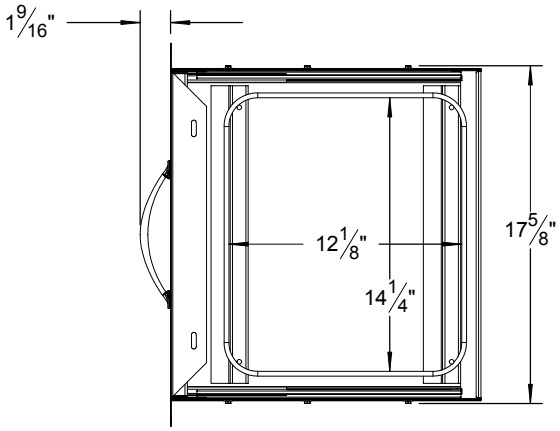

COUNTER FRONT CUTOUT REQUIREMENTS

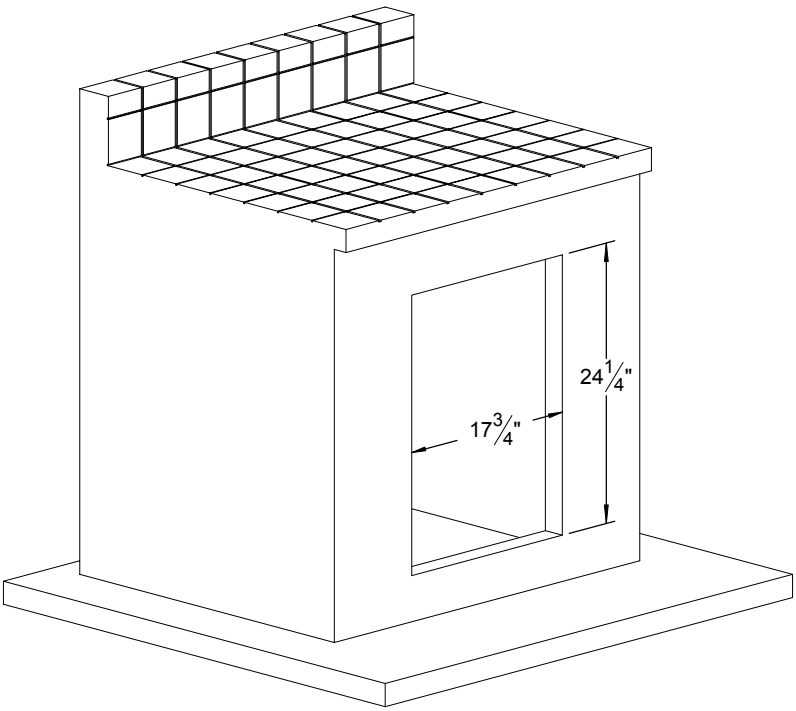

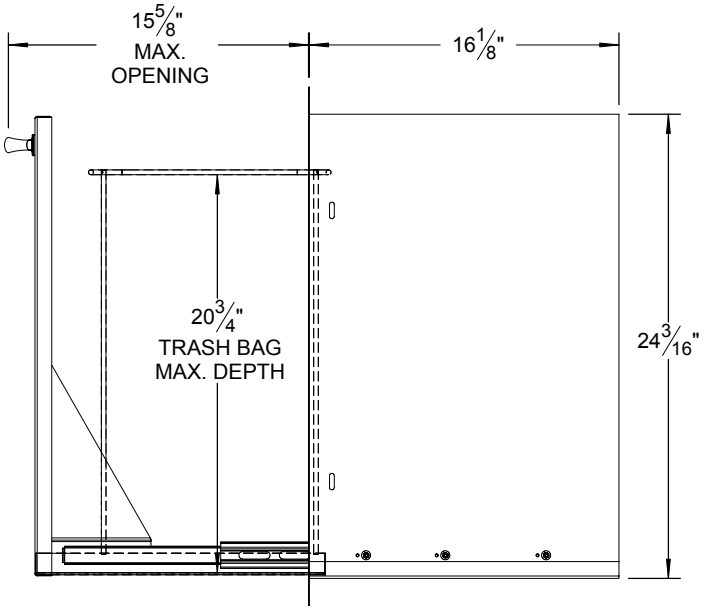

Alfresco™
SUPERIOR EQUIPMENT SOLUTIONS
7039 EAST SLAUSON AVENUE
COMMERCE, CA. 90040

THE INFORMATION CONTAINED IN THIS DRAWING IS THE SOLE PROPERTY OF SUPERIOR EQUIPMENT SOLUTIONS INC. ANY REPRODUCTION IN PART OR AS A WHOLE WITHOUT WRITTEN PERMISSION FROM SUPERIOR EQUIPMENT SOLUTIONS, INC. IS PROHIBITED.

DRAWN BY: ADRIAN CRISCI
CREATED: September 26, 2007 3:35:15 PM

PROJECT TITLE: **IATSH**

DRAWING TITLE:

IATSH - TRASH CENTER SPECIFICATIONS

DRAWING NO.:
IATSH SPEC SHEET