Job Name :
Purchaser :
Engineer :
Submitted To :
Submitted By :
Unit Designation : Schedule No.:

Location :
P.O. No. :
Architect :
Date :
For : ☐ Reference ☐ Approval ☐ Construction
Model No.:

Submittal Data : LA245HV

Art Cool ™ Inverter Heat Pump
Single Zone Mini Split

Capacities :

Rated Cooling Capacity (Btu/h)	24,000/23,600
Power Input (W, Cooling)	2,450/2,450
SEER	16.2
EER	9.8
Rated Heating Capacity (Btu/h)	27,600/27,200
Power Input (W, Heating)	2,900/2,900
HSPF (IV)	8.2

Cooling Nominal Test Condition :
Indoor : 80°FDB / 67°F WB
Outdoor : 95°F DB / 75°F WB
Pipe Length : 25ft

Heating Nominal Test Condition :
Indoor : 70°FDB / 60°F WB
Outdoor : 47°F DB / 43°F WB
Pipe Length : 25ft

Indoor Unit :

Power Supply (V,Ph,Hz)	230/208,1,60
Minimum Circuit Ampacity (A)	5
Maximum Overcurrent Protection (A)	15
Weight (lbs)	31.1
Sound Pressure (dB(A), H/M/L Cool, 3.3ft front)	47/42/39
Air Circulation (CFM, H/M/L Cool)	530/445/380
Dehumidification (pts/hr)	6.6
Drain Pipe (inches, O.D, I.D)	3/4, 5/8

Outdoor Unit :

Power Supply (V,Ph,Hz)	230/208,1,60
Minimum Circuit Ampacity (A)	20
Maximum Overcurrent Protection (A)	25
Running Current (A, Cooling/Heating)	11.0/13.0
Weight (lbs)	172.2
Sound Pressure (dB(A), High Cool, 3.3ft front)	56

Refrigerant Piping :

Maximum Length (ft)	50
Maximum Height Difference (ft)	25
Liquid Side (inches, O.D)	1/4
Gas Side (inches, O.D)	1/2
Refrigerant	R410A

Operating Range :

Cooling Operating Range (°F, standard)	14 - 115
Heating Operating Range (°F)	14 - 75

Standard Features :

- Five Year Compressor Warranty
- Three Year Functional Parts Warranty
- Customizable Option Color Panel
- Plasma Air Purifying System
- Chaos Swing Air Circulation
- Jet Cool ™
- LCD Wireless Remote Controller
- Auto Restart
- 24 Hour On/Off Timer
- Built-in Low Ambient Standard down to 14°F at cooling mode

Note :

LAN245HV

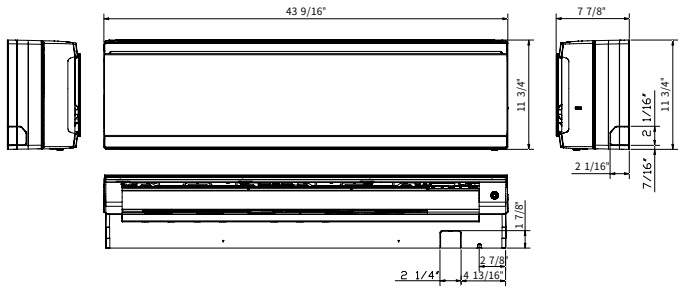

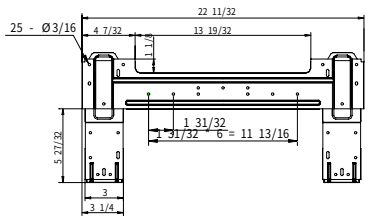

LAU245HV

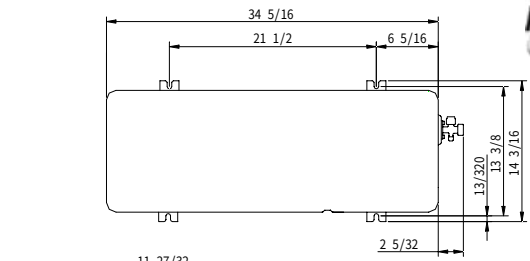

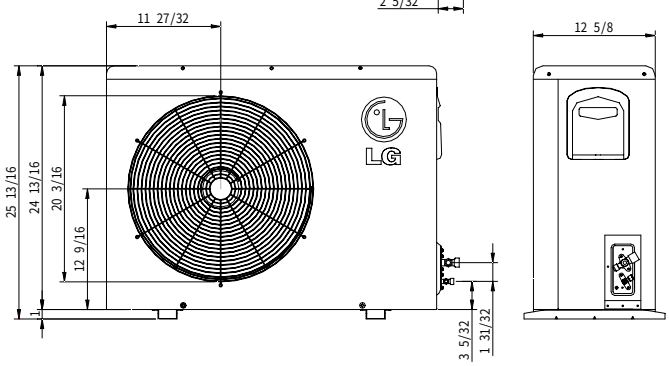

© LG Electronics USA 2008 SD-LA245HV-VER1
Specifications and information in this submittal data are subject to change without notice.