SU 47-P

SU 47-P 36” 00911475601

SU 47-P

- Motor: 600 CFM
  Aluminium die-cast motor housing
- Pressure: 480 Pa
- Noise level: 63 dBA /4,9 sones

- Lighting: 2 x 20 W halogen lamps

- Control panel:4 speed + delay off timer + light switch

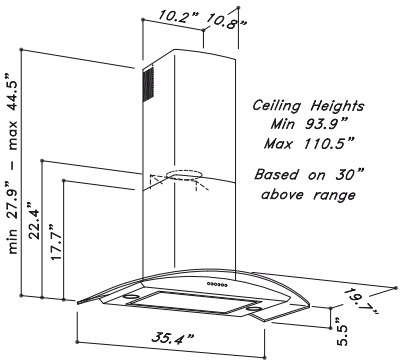

- Grease filter: anodized aluminium (5+1 layers)
- Air Outlet: 6” round

- **Accessories**:

Charcoal filters: KF6 (order 1 pc)	60080466002
Air Deviator: Def S47	75050900147