QUALITY AND PERFORMANCE
BY DESIGN.
LYNX
LYNX
PROFESSIONAL GRILLS

EVERYTHING FOR THE OUTDOOR KITCHEN.

The outdoors is our habitat. It's also our specialty - we're experts at it.

And while the world's greatest grill will always be our flagship, we've applied the Lynx philosophy and outstanding workmanship to the whole collection of outdoor products and accessories, from refrigerators to warming drawers.

Lynx's complete line of outdoor kitchen products combines advanced proprietary technologies and refined features that you can use to design your own outdoor cooking center.

Shown: 42" grill with access doors, utility drawers, double side burner with prep center, warming drawer and cocktail pro.

WELL BUILT
BY HIGHLY TRAINED CRAFTSMEN.

Lynx craftsmen begin as apprentices on our shop floor. After three years of working on the parts of the grill you don't see, only then do they work on the ones you do.

They take a lot of pride in their work. We think it shows.

CAST BRASS BURNERS
FOR AN EXTREMELY EVEN COOKING TEMPERATURE.

Lynx cast burners hold and radiate a high temperature, so a passing breeze can't rob the grill of heat. We cast ours in brass, a tough-as-nails alloy that is less prone to corrosion. In combination with the ceramic briquette array, this makes for an extremely even cooking temperature.

THE LYNX COLLECTION

Built-in models available

54" Professional Grill

42" Professional Grill

36" Professional Grill

PROSEAR™ 2 TECHNOLOGY
FOR RESTAURANT-QUALITY PERFORMANCE.

Unlike many grills with infrared searing burners, which only offer two settings – hi or off – the Lynx ProsSear™ 2 infrared burner is variable, allowing you to sear the baseball-cut filet mignon like the restaurant, then throttle it back to cook delicate seafood like scallops.

ProSear™

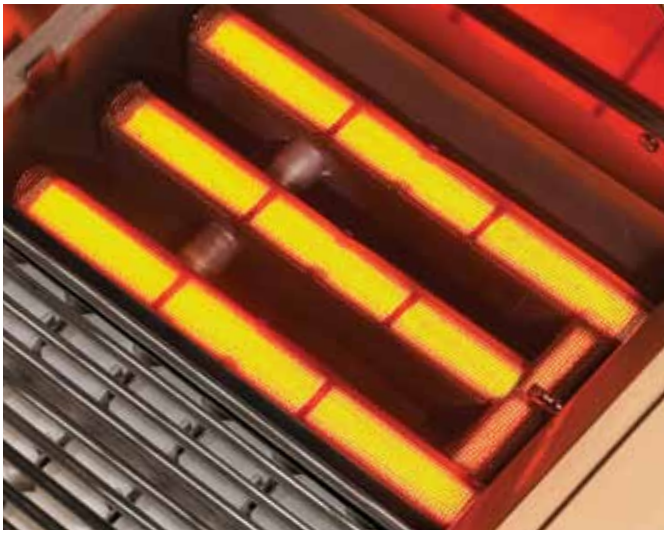

INTEGRATED ILLUMINATION
SO YOU CAN SEE WHAT YOU'RE DOING.

The blue LED lights – a Lynx signature – light up the control knobs, and our ultra-bright internal halogen lights illuminate the grilling surface. Without these features, it can be difficult to tell when *al dente* is about to become overcooked, or rare is about to become medium.

30″ Professional Grill

27″ Professional Grill

Grill Surface Light

Rotisserie System

Hot Surface Ignition System

Lynx Hood Assist Kit

The Heat Stabilizer

Removable Smoker Box

SPECIFICATIONS

The guides, measurements and dimensions detailed below are designed to assist you with planning your outdoor kitchen. Please note: because of continuing product innovation, specifications are subject to change without notice. **Important:** Please reference the Care & Use / Installation Manual for details on gas plumbing requirements, electrical specifications and the proper installation of your Lynx outdoor kitchen equipment. This manual can be downloaded from the Lynx website at www.lynxgrills.com

PROFESSIONAL GRILLS

Model	A	B	C	D	E	F	G	H
L27	–	26	22	–	–	–	–	10 7/8
L30	–	29	24 1/2	–	–	–	–	10 7/8
L36	–	35	22	–	–	–	–	10 1/8
L42	–	41	24 1/2	–	–	–	–	10 7/8
L54	–	53	24 1/2	–	–	–	–	10 7/8

WITH INSULATED JACKET INSTALLED

Model	a	b	c	d	e	f
LIJ27	33	5	24	4 1/2	3	11 5/8
LIJ30	36	5	26 1/2	4 1/2	3	11 5/8
LIJ36	42	5	24	4 1/2	3	11 5/8
LIJ42	48	5	26 1/2	4 1/2	3	11 5/8
LIJ54	60	5	26 1/2	4 1/2	3	11 5/8

Note: Insulated jacket required for all grills installed into a combustible enclosure.

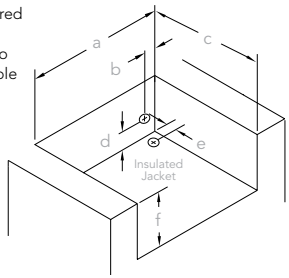

Countertop Notch Detail

Only required if island countertop overhangs the face of the island

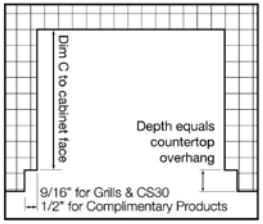

COMPLEMENTARY PRODUCTS

Model	A	B	C	D	E	F	G	H
ACCESS DOORS								
LDR21-1	–	–	–	19 1/4	–	–	–	–
LDR27-1	–	–	–	25 1/4	–	–	–	–
LDR30-1	–	–	–	28 1/4	–	–	–	–
LDR36-2	–	–	–	34 1/4	–	–	–	–
LDR42-1	–	–	–	40 1/4	–	–	–	–
LSA36	–	–	24 1/2	34 1/4	–	–	–	–
LSA30	–	–	24 1/2	28 1/4	–	–	–	–
SIDE BURNERS								
LSB1	12 1/8	–	24 1/2	–	–	–	–	10 5/8
LSB2	12 1/8	–	24 1/2	–	–	–	–	10 5/8
LSB2PC	24 1/4	–	24 1/2	–	–	–	–	10 5/8
LPB	19	–	22	–	–	–	–	10 5/8
UTILITY DRAWERS								
LUDE	–	–	24	–	12 1/8	19 1/4	–	–
LUDXL	–	–	24 1/4	–	17 1/4	18 9/16	–	–
LDW19	–	–	24 1/2	–	17 1/4	19	–	–
LDW16	–	–	24 1/2	–	14 1/4	19	–	–
WARMING DRAWERS								
L30WD	–	–	20 1/2	–	–	–	28 1/2	10
L42CC	–	–	24 1/2	–	–	–	40 1/4	19 3/8
COCKTAIL PRO								
CS30	–	–	22 3/4	–	–	–	–	10 5/8

COMPLEMENTARY PRODUCTS

2 drawer/door combination

Cocktail Pro/Built In

Cocktail Pro/Free Standing

24" Outdoor Refrigerator

15" Outdoor Ice Machine

Power Burner

Side Burners

Double Side Burner-Prep Center

20" Outdoor Refrigerator

Infrared Outdoor Patio Heater

OUTDOOR REFRIGERATOR

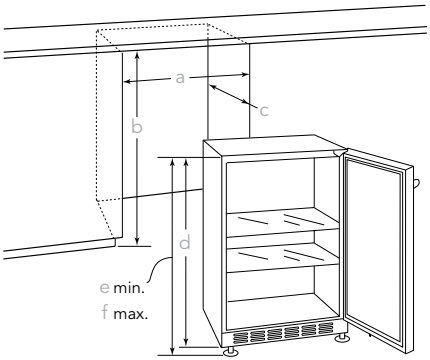

ICE MACHINE

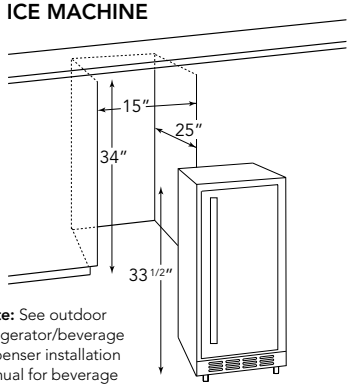

Note: See outdoor refrigerator/beverage dispenser installation manual for beverage tower details.

TRASH CENTER AND TOWEL DISPENSER

Trash Center Model No. L18TC & L20TR

Cutout width and height indicated below; depth 22″

Trash Chute Model No. L18TS

Cutout width and depth indicated below; height 6 1/4″

Towel Dispenser Model No. L16TWL

Cutout width and height indicated below; depth 8″

OUTDOOR REFRIGERATORS

Model	a	b	c	d	e	f
L500REF	21 1/2	35	26	33 1/8	33 5/8	34 1/4
L24REF	24	33	26	32	32 1/2	33 1/8
L24BF	24 1/4	35	26	34 1/4	34 3/8	35 1/2
L24DWR	24 1/4	35	26	34 1/4	34 3/8	35 1/2

CLEARANCE

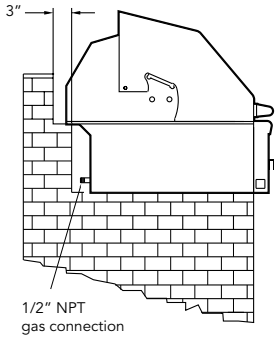

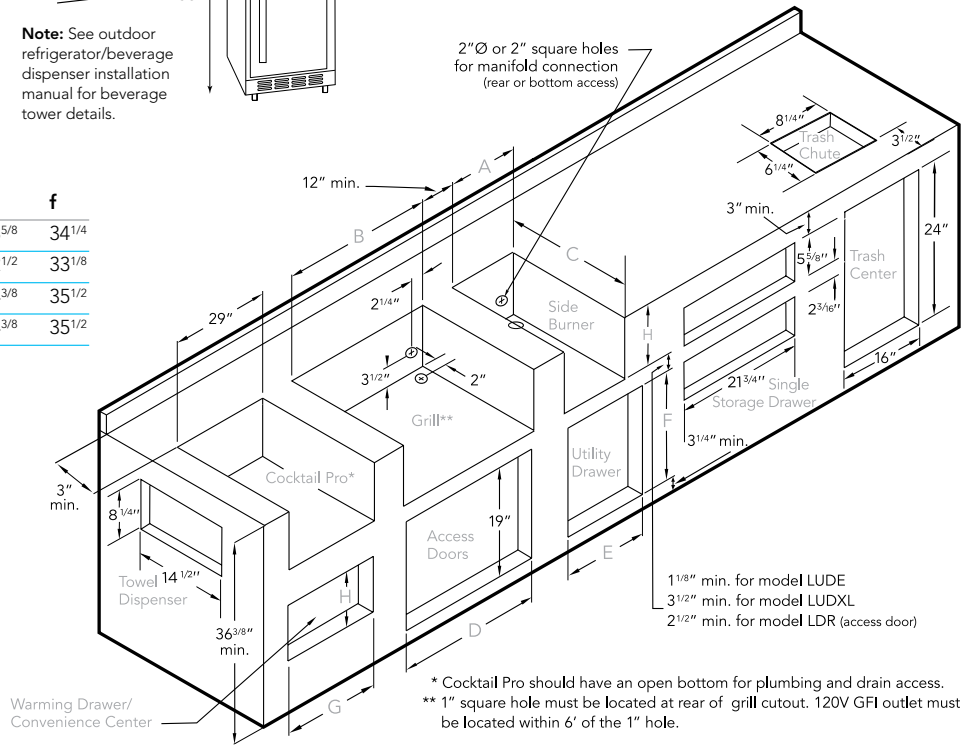

* Cocktail Pro should have an open bottom for plumbing and drain access.
** 1″ square hole must be located at rear of grill cutout. 120V GFI outlet must be located within 6′ of the 1″ hole.

30″ Warming Drawer

42″ Convenience Center & Warming Drawer

Trash Center

Towel Dispenser

Towel Bar

Access Doors

Utility Drawers

Griddle Plate

Sliding Tank Tray

Custom Covers

The best outdoor kitchen products come from:
Lynx Professional Grills,
6023 East Bandini Blvd.
Commerce, CA 90040

For more information please call,
1-888-879-2322 or visit **www.lynxgrills.com**

P/N 32598 2/12 2012 **©Lynx Professional Grills**

PROFESSIONAL GRILLS