24" Bar Handle Dishwasher
300 Series- Stainless steel
SHX53T55UC

Features and Benefits

Key Features

- 46 dBA- Quietest Brand
- InfoLight® Beams on Floor to Indicate Dishwasher is Running
- Detergent Tray Optimizes Detergent Dissolving
- AquaStop® Leak Protection Works 24/7
- Self-Latching Door

Design

- Full Size Stainless Steel Tall Tub Installs Perfectly Flush
- 15 Place Setting Capacity
- LED Remaining Time Display
- Manual Height Adjustment for Upper Rack

Performance

- 46 dBA- Quietest Brand
- 4 Programs and 4 Options
- Detergent Tray Optimizes Detergent Dissolving
- Load Size Sensor Automates Wash Temperature
- Sanitize Option Eliminates Bacteria and Enhances Drying Results
- ExtraShine™ Option Enhances Shine and Drying Results of your Dishes

Efficiency

- 259 kwh/yr - Energy Star®

Convenience

- InfoLight® Beams on Floor to Indicate Dishwasher is Running
- 24 h Delay Start Timer
- AquaStop® Leak Protection Works 24/7
- Self-Latching Door

LEARN MORE AT energystar.gov

Notes: All height, width and depth dimensions are shown in inches. *Please refer to installation instructions prior to making cutout. BSH reserves the absolute and unrestricted right to change product materials and specifications, at any time, without notice.Consult the product's installation instructions for final dimensional data and other details. Applicable product warranty can be foundin a ccompanying product literature or you may contact your account manager for further details.

For more information on our entire line of products, go to boschappliances.com or call 1-800-944-2904.

Copyright ©2014 BSH Home Appliances Corporation. All rights reserved. Bosch is a registered trademark of Robert Bosch GmbH.

Litho Date: 01/2014

24" Bar Handle Dishwasher
300 Series- Stainless steel
SHX53T55UC

BOSCH

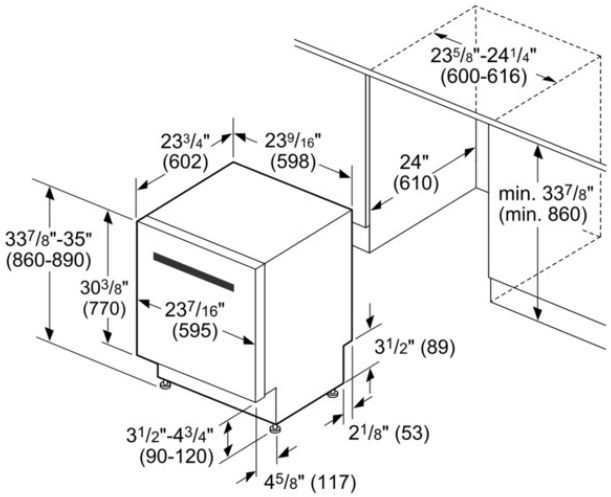

measurements in inches (mm)

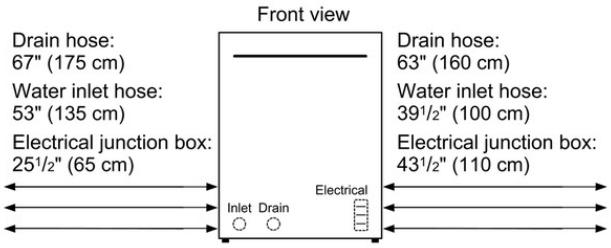

All connections are at the rear of the appliance.
Extension for drain hose available as accessory.
Power cord for connection to electrical outlet (3-prong plug) available as accessory.

Features

Watts (W)	1300
Current (A)	12
Volts (V)	120
Frequency (Hz)	60
Power Cord Length	43 1/2"
Minimum Water Pressure (lb/sin)	14.0
Length inlet hose (in)	53"
Length outlet hose (in)	67 "
Overall appliance dimensions (HxWxD) (in)	33 7/8 " x 23 9/16 " x 23 3/4 "
Required cutout size (HxWxD) (in)	33 7/8 " x 23 5/8 " x 24 "
Adjustable feet	Yes

Technical Specification

Number of wash cycles	4
Number of options	4
Third Rack	
Tub material	Stainless steel
Concealed heating element	Yes
Leak protection system	
Five-level wash	Yes
Water softener	No
ChildLock	No
Total annual energy consumption (kWh)	259
Energy Efficiency Class	Tier 1
Energy Star® qualified	Yes
Total annual energy consumption (kWh)	623.5
Total annual water consumption (g)	624
Number of place settings	15

Notes: All height, width and depth dimensions are shown in inches. *Please refer to installation instructions prior to making cutout. BSH reserves the absolute and unrestricted right to change product materials and specifications, at any time, without notice.Consult the product's installation instructions for final dimensional data and other details. Applicable product warranty can be foundin a ccompanying product literature or you may contact your account manager for further details.

For more information on our entire line of products, go to boschappliances.com or call 1-800-944-2904.
Copyright ©2014 BSH Home Appliances Corporation. All rights reserved. Bosch is a registered trademark of Robert Bosch GmbH.

Litho Date: 01/2014