No.	Spare Part No.	Description of Spare Part
		RA3106WT
1	10011147	Cabinet
2	20010187	Cover of door hinge screw hole
3	20010186	Door hinge cover
4	20020062	Upper hinge assembly
5	20016008	Upper door bar
6	20016012	Upper door gasket
8	10023720	Upper door
9	20010068	Right limit block of door
10	20010371	Left limit block of door
11	10023721	Lower door
12	20016110	Lower door right aid-closer
13	20016111	Lower door left aid-closer
14	20016013	Lower door gasket
15	20023237	Drink bottle holder
16	20020105	Drink bottle holder bar
17	20020966	Short straight bar
18	20020965	Short curved bar
19	20011610	Crisper Box (emeral green)
20	10200607	Crisper box cover
21	20021052	Compressor support base
22	20050128	Power supply cord
23	20060086	Drier filter (for R600a)
24	20060046	Connecting tube (short)
25	20061712	Compressor(QD3511Y)
26	20050012	Earthing wire of compressor
27	20050195	Connecting wire of compressor
28	20060010	Process tube
29	20014437	Wire Box
30	20014438	Base of wire box
31	20010123	Long Adjustable Foot
32	20010111	Short Adjustable Foot
33	10201976	Shelves of fridge
34	20022150	Lower Door Hinge Assembly
35	20011051	Lamp cover
36	20050045	Lamp Bulb (E14,110V)
37	20010024	Knob
38	20010216	Thermostat cover
39	20061368	Thermostat
40	20050241	Lamp holder（E14）
41	20050016	Door switch
43	20021249	Middle hinge
44	20012230	Middle hinge bottom plate
46	20010030	Ice Cube Tray

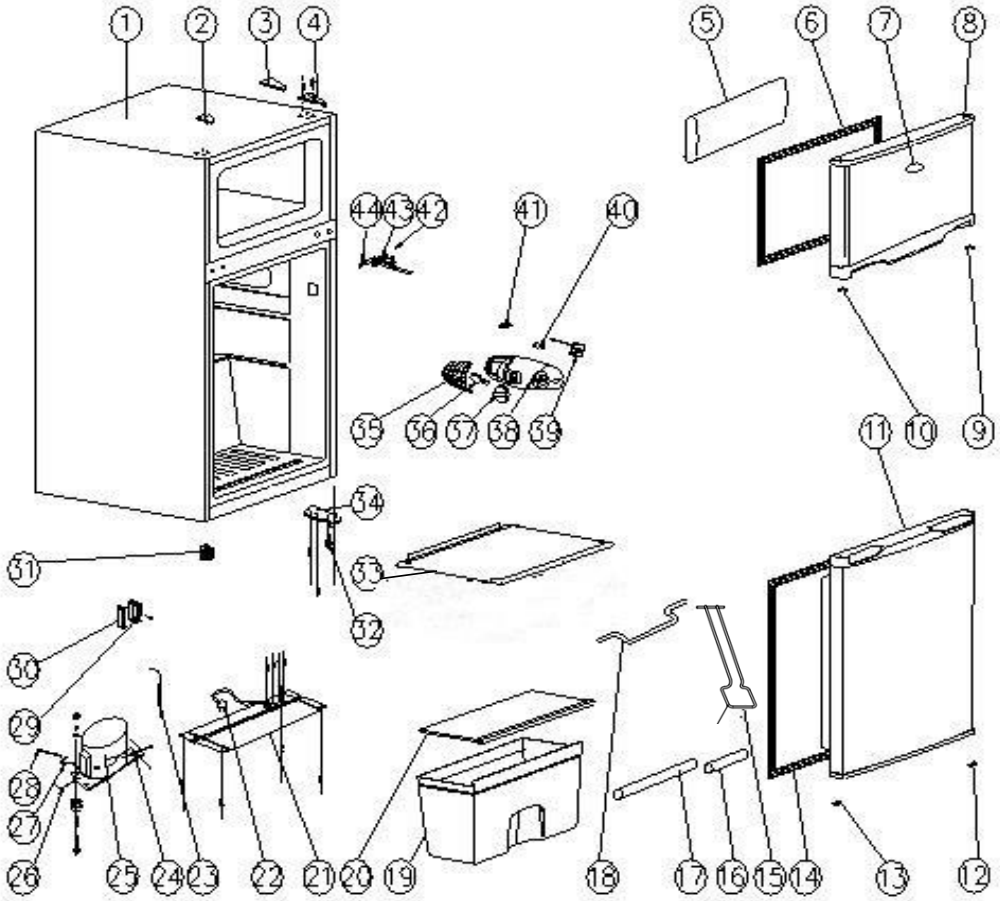
1
2
3
4
5
6
7
8
44
43
42
41
40
55
56
57
58
59
11
10
9
54
51
53
52
30
29
28
27
26
25
24
23
22
21
20
19
18
17
16
15
14
13
12