KITCHEN
SYSTEMS

FRANKE

SPECIFICATION SHEET

PRODUCT FAMILY : **Sinks** FINISH : **Stainless Steel** SERIES : **COMPACT** MODEL : **CPX120**

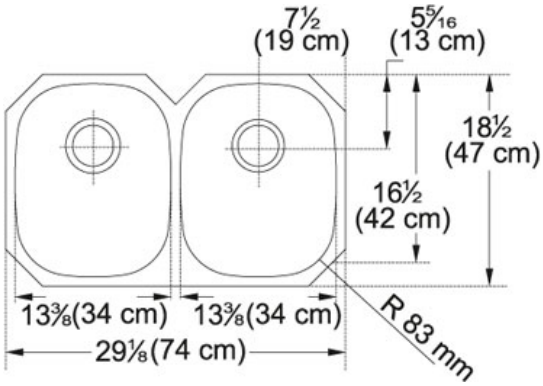

Product Information

FUN#	122.0055.373
US Part Number	CPX120
Minimum Cabinet Size	33"
Drain Opening	3 1/2"
Outer Dimensions	29 1/8"x18 1/2"
Bowl Size	13 3/8"x16 1/2"x6 7/8"
Number of Bowls	2
Type of Material	18 ga Stainless Steel

Accessories

112.0035.624

112.0036.766

112.0038.356

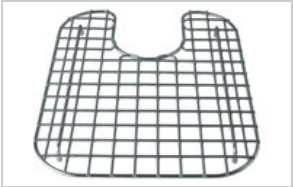

112.0066.263

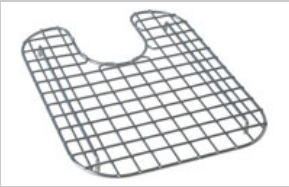

112.0066.264

112.0066.282

Suggested Products

112.0007.726

112.0049.213

112.0066.071

112.0073.921

112.0073.934

119.0066.616

119.0068.282

120.0175.295