30" Steam Convection Oven

Benchmark™ Series - Stainless Steel HSLP451UC

BOSCH
Invented for life

HSLP451UC
Stainless Steel

The only steam convection oven in its class installs flush, for a European kitchen design.

Features & Benefits

- Steam convection cooking cooks meals that are crispy and tender.
- Steam cooking maintains your vegetables' nutrients, flavors and color.
- Designed to fit perfectly above a warming drawer or storage drawer.
- The color TFT control panel with SteelTouch™ buttons is easy to use.
- Installs horizontally for perfect alignment with speed or steam oven.
- Reheats leftovers with just-out-of-the-oven taste.

General Properties

Cooking Modes	Steam, Steam Convection, European Convection, Reheat, Keep Warm, Defrost, Slow Cook, Proof, Dish Warming, 2 Chicken and 7 Vegetable Programs
Cleaning Type	Steam Clean
Telescopic Rack	0
Illumination Type	Halogen
Interior Lights	1

Oven Performance

Steam Element Wattage	1,960 W
Bake Element Wattages	N/A
Broil Element Wattages	N/A
Convection Element Wattages	1,960 W

Technical Details

Watts (W)	1,900 W
Circuit Breaker (A)	15 A
Volts (V)	240/208 V
Frequency (Hz)	60 Hz
Power Cord Length (in)	48"
Plug Type	Fixed Connection, No Plug
Energy Source	Electric

Dimensions & Weight

Overall Appliance Dimensions (HxWxD)(in)	19 5/8" x 29 3/4" x 21 3/8"
Required Cutout Size (HxWxD) (in)	19 1/4" x 28 1/2" x 22"
Net Weight (lbs)	70 lbs

Accessories—Included

Included	Wire Rack, Perforated Cooking Pan - Full Size, Baking Tray, Perforated Cooking Pan - Half Size, Cooking Pan - Half Size.

Accessories—Optional

HEZ36D453
Cooking pan - full size, 1 5/8" deep [not included with product]

HEZ36D452
Baking tray - full size, 1 1/8" deep

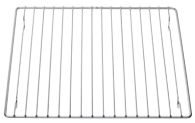

HEZ36DR4
Wire rack for steam and convection oven

HEZ36D453G
Perforated cooking pan - full size, 1 5/8" deep

HEZ36D153G
Perforated cooking pan - half size, 1 5/8" deep

HEZ36D153
Cooking pan - half size, 1 5/8" deep

For help and assistance with Bosch accessories please visit: www.bosch-eshop.com/eshop/bosch/us or call 1-800-944-2904 Mon-Fri 5am to 6pm PST Sat 6am to 3pm PST

Notes: All height, width and depth dimensions are shown in inches. Please refer to installation instructions prior to making cutout. BSH reserves the absolute and unrestricted right to change product materials and specifications, at any time, without notice. Consult the product's installation instructions for final dimensional data and other details. Applicable product warranty can be found in accompanying product literature or you may contact your account manager for further details.

Warranties: Bosch warrants that the Product is free from defects in materials and workmanship for a period of three hundred sixty-five (365) days from the date of purchase. The foregoing timeline begins to run upon the date of purchase, and shall not be stalled, tolled, extended, or suspended, for any reason whatsoever.

For more information on our entire line of products, go to www.bosch-home.com/us or call 1-800-944-2904

© BSH Home Appliances Corporation. All rights reserved. Bosch is a registered trademark of Robert Bosch GmbH.

30" Steam Convection Oven

Benchmark™ Series - Stainless Steel HSLP451UC

BOSCH
Invented for life

Installation Details

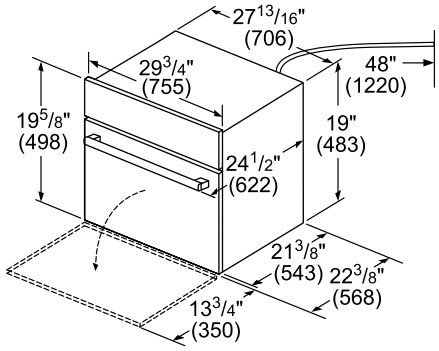

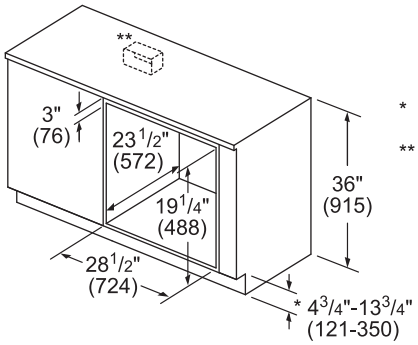

* Includes 3/4" (19) base plate

** Receptacle may be located to the left or right of the unit within reach of the power cord.

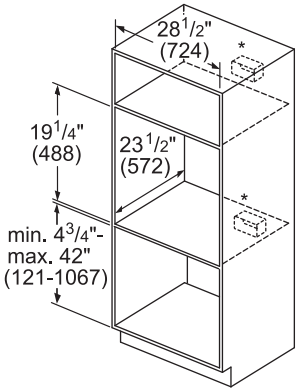

* Receptacle may be located above or beneath the unit within reach of the power cord.

measurements in inches (mm)

Flush Install

Top View

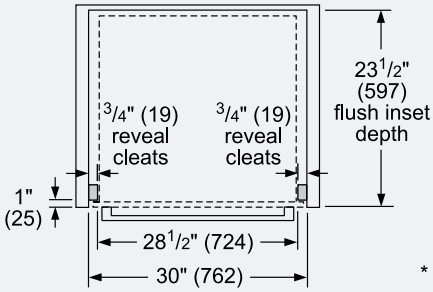

Side View

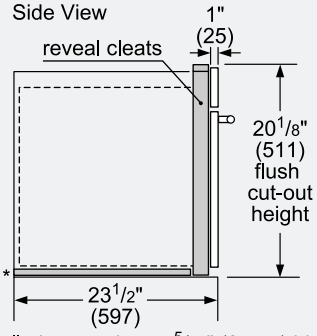

* Flush installation requires a 5/16" (8 mm) high x 28 1/2" (724 mm) wide x 22 1/2" (571 mm) deep baseplate underneath the unit body.

Measurements in inches (mm)

Example Flush Install

Single wall oven shown.

For help and assistance with Bosch accessories please visit: www.bosch-eshop.com/eshop/bosch/us or call 1-800-944-2904 Mon-Fri 5am to 6pm PST Sat 6am to 3pm PST

Notes: All height, width and depth dimensions are shown in inches. Please refer to installation instructions prior to making cutout. BSH reserves the absolute and unrestricted right to change product materials and specifications, at any time, without notice. Consult the product's installation instructions for final dimensional data and other details. Applicable product warranty can be found in accompanying product literature or you may contact your account manager for further details.

Warranties: Bosch warrants that the Product is free from defects in materials and workmanship for a period of three hundred and sixty-five (365) days from the date of purchase. The foregoing timeline begins to run upon the date of purchase, and shall not be stalled, tolled, extended, or suspended, for any reason whatsoever. This Product is also warranted to be free from cosmetic defects in material and workmanship (such as scratches of stainless steel, paint/porcelain blemishes, chip, dents, or other damage to the finish of the Product, for a period of thirty (30) days from the date of purchase or closing date for new construction. This cosmetic warranty excludes slight color variations due to inherent differences in painted and porcelain parts, as well as differences caused by kitchen lighting, product location, or other similar factors. This cosmetic warranty specifically excludes any display, floor, "As Is", or "B" stock appliances.

For more information on our entire line of products, go to www.bosch-home.com/us or call 1-800-944-2904

© BSH Home Appliances Corporation. All rights reserved. Bosch is a registered trademark of Robert Bosch GmbH.

30" Steam Convection Oven

Benchmark™ Series - Stainless Steel HSLP451UC

BOSCH
Invented for life

Installation Details

Side-by-Side Installation

Standard

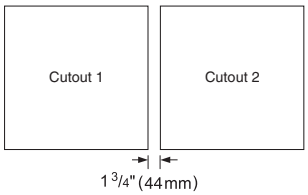

The ovens will overlap the cutout resulting in a 1/2" (13mm) spacing between the products

IMPORTANT: The spacing between cutouts applies when installing any Bosch 30" or 27" single, double, combination and 27"/30" compact oven in a side-by-side installation.

Flush

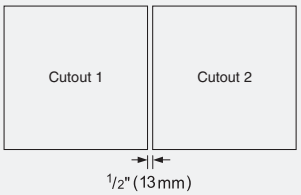

Standard Installation
30" Steam Convection Oven over Storage or Warming Drawer

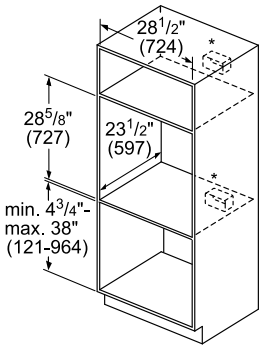

* For installation into a wall cabinet, the receptacle may be installed above, below, or to the left or right of the unit within range of the power cord.

Flush Installation
Steam Convection Oven over Storage or Warming Drawer

Side View

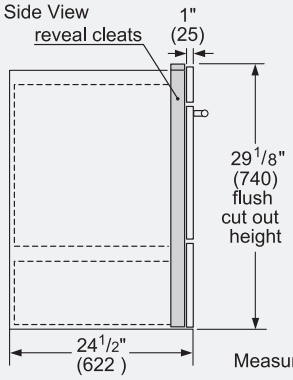

Measurements in inches (mm)

Standard Installation
30" Steam Convection Oven over Single Oven***

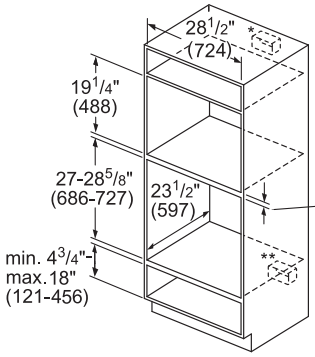

*Junction box may be located above or next to the unit within the reach of the power cord.

**Junction box may be located below (depending on space) or next to the unit within the reach of the power cord.

***Most combinations available as combo oven (one cut out, one electrical hook up).

Minimum dimension between cut outs:
- 1" (25mm) for wall oven cut out of 27"
- 2 5/8" (67mm) for wall oven cut out of 28 5/8"

measurements in inches (mm)

NOTE: This configuration is available as a combo oven (one cut out, one electrical hook up) - **HSLP751UC**

Flush Installation
Steam Convection Oven over Single Oven**

NOTE: This configuration available as a combo oven. See Note at left for details.

Side View

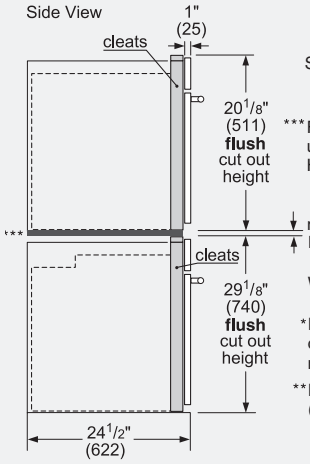

Steam Convection Oven

***Flush installation requires a base plate underneath the body: 30" Products - Dimensions: H 5/16"(8) x W 28 1/2"(724) x D 22 1/2"(571)

minimum 1/2" (13) required between cutouts*

Wall Oven

*IMPORTANT: base has to be able to support oven weight. Please check oven manual for minimum weight requirements.

**Most combinations available as combo oven (one cut out, one electrical hook up).

measurements in inches (mm)

For help and assistance with Bosch accessories please visit: www.bosch-eshop.com/eshop/bosch/us or call 1-800-944-2904 Mon-Fri 5am to 6pm PST Sat 6am to 3pm PST

Notes: All height, width and depth dimensions are shown in inches. Please refer to installation instructions prior to making cutout. BSH reserves the absolute and unrestricted right to change product materials and specifications, at any time, without notice. Consult the product's installation instructions for final dimensional data and other details. Applicable product warranty can be found in accompanying product literature or you may contact your account manager for further details.

Warranties: Bosch warrants that the Product is free from defects in materials and workmanship for a period of three hundred and sixty-five (365) days from the date of purchase. The foregoing timeline begins to run upon the date of purchase, and shall not be stalled, tolled, extended, or suspended, for any reason whatsoever. This Product is also warranted to be free from cosmetic defects in material and workmanship (such as scratches of stainless steel, paint/porcelain blemishes, chip, dents, or other damage to the finish of the Product, for a period of thirty (30) days from the date of purchase or closing date for new construction. This cosmetic warranty excludes slight color variations due to inherent differences in painted and porcelain parts, as well as differences caused by kitchen lighting, product location, or other similar factors. This cosmetic warranty specifically excludes any display, floor, "As Is", or "B" stock appliances.

For more information on our entire line of products, go to www.bosch-home.com/us or call 1-800-944-2904

© BSH Home Appliances Corporation. All rights reserved. Bosch is a registered trademark of Robert Bosch GmbH.