LEADERSHIP BY DESIGN

Specialised for 35 years in the production of electrical cooking appliances, always succeeding in being innovative in functional proposals and design.

In this catalogue you will find an infinity of solutions for equipping your kitchen with appliances at the top of world production.

Our mission is to offer the widest possible choice in the specific field of cooking, trying to satisfy the greatest number of user requirements from the point of view of both design and functionality.

To achieve this you will find a vast range of products offering:
dimensions from 24" to 60";
6 colours with 3 types of finish;
4 sizes and 6 types of oven.

On the hobs: 4 types of burners, fry top, "coup de feu". Numerous accessories for the most refined cooking activities.

DESIGN CERTIFIED

INDEX

General characteristics ..... page 3
Optionals ..... " 8
Professional Plus cookers ..... " 12
UAG wall hoods ..... " 43
Majestic cookers ..... " 152
UAM wall hoods ..... " 63

OVENS

Wide choice of ovens. The range comprises 4 ovens with different volumes:

- **maxi oven 90** available in both the electric multifunction and ventilated gas versions;
- **standard oven 60** available in both the electric multifunction and the ventilated gas version;
- **midi oven 40** available in the static electric versions;
- **mini oven 30** available in the static electric version;

All ovens have a removable triple-glass for easy internal cleaning. It allows better heat insulation and energy saving.

MINI OVEN 30

OVEN TYPE	Mini 30	Midi 40	Standard oven 60	Maxi-oven 90
Rotisserie: electric broil (W)	1.630	1.740	1.740	2.400
Internal dimension (inch)	10 1/4" x 13 3/4" x 17 11/16"	14 3/16" x 13 3/4" x 17 11/16"	17 5/16" x 13 3/4" x 17 11/16"	25 3/16" x 13 3/4" x 17 11/16"
Capacity (cubic feet)	1,1	1,6	1,9	2,8
MULTIFUNCTION OVEN				
upper resistance absorption (W)	870	920	980	980
lower resistance absorption (W)	870	980	1.420	1.630
circular resistance absorption (W)	--	--	2.610	2.610
ratings (Watt)	1.850	2.070	3.700	3.700
CONVECTION GAS OVEN				
Convection gas oven burner (BTU)	--	--	11.500	15.000
Ratings (W) at 240 V - 60 Hz	--	--	1.850	2.500

MIDI OVEN 40

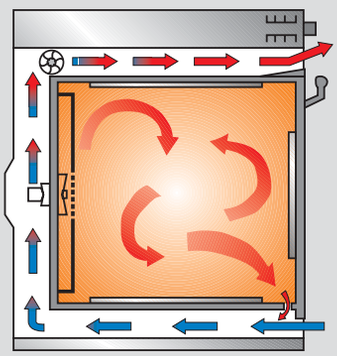

Cooling fan and the discharging of waste heat: the heat is discharged back into the kitchen, keeping the door and the control board cool.

STANDARD OVEN 60

MAXI-OVEN 90

MULTIFUNCTION ELECTRIC OVEN (CONVECTION & BAKE)

1 Defrost function and Quick start
Defrosting of frozen food is accelerated by means of fan driven air circulation. The advantage of defrosting at room temperature is that it does not alter the taste and appearance of the food. Quick Start, available only on certain models, is a fast pre-heating oven function.

2 Convection oven
This provides a more even heat than a conventional oven and food is «sealed» very quickly. Pre-heating is generally unnecessary. As there is no top or bottom heat the whole area of the oven can be utilized. This setting is ideal for batch baking or cooking a complete meal.

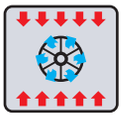

3 Convection bake
A fast intensive form of cooking, suitable for a variety of dishes. It replaces the spit and can be used for baked fish, braised vegetables, kebabs, roast chicken, duck etc.

4 Convection broil
An energy-saving method for deep cooking. Suitable for chops, sausages, kebabs etc.

5 Grill-baking
Suitable for roast meats in general e.g. fillet steak, grilled fish and vegetables. And also for cooking «au gratin» e.g. cauliflower cheese.

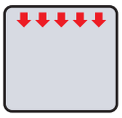

6 Upper element
Especially suitable for browning and to add the finishing touches of colour to different dishes. We sug-gest this setting when browning lasagne, melting cheese toppings etc.

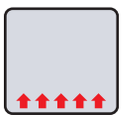

7 Lower element
As the heat comes from the lower element, this setting is particularly suitable for pastry and cakes e.g. flans, pizzas, biscuits, fruit cakes etc.

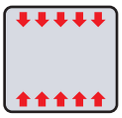

8 Bake
This operates like a conventional electric oven and can be used accordingly. Suitable for pork, chops, sausage, game, roast veal, meringues and biscuits, baked fruit, etc.

CONVECTION GAS OVEN

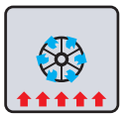

1 Convection oven
This provides a more even heat than a conventional oven and food is «sealed» very quickly. This setting is ideal for batch baking or cooking a complete meal. Several different dishes can be cooked using various shelf positions.

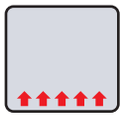

2 Lower element
A fast intensive form of cooking, suitable for a variety of dishes. It replaces the spit and can be used for baked fish, braised vegetables, kebabs, roast chicken, duck etc.

3 Convection broil
An energy-saving method for deep cooking. Suitable for chops, sausages, kebabs etc.

4 Broil
Suitable for roast meats in general e.g. fillet steak, grilled fish and vegetables. And also for cooking «au gratin» e.g. cauliflower cheese.

STANDARD ELECTRIC OVEN (BAKE)

5 Broil
Suitable for roast meats in general e.g. fillet steak, grilled fish and vegetables. And also for cooking «au gratin» e.g. cauliflower cheese.

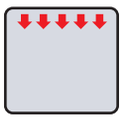

6 Upper element
Especially suitable for browning and to add the finishing touches of colour to different dishes. We sug-gest this setting when browning lasagne, melting cheese toppings etc.

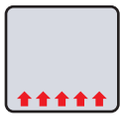

7 Lower element
As the heat comes from the lower element, this setting is particularly suitable for pastry and cakes e.g. flans, pizzas, biscuits, fruit cakes etc.

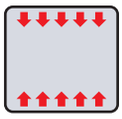

8 Bake
This operates like a conventional electric oven and can be used accordingly. Suitable for pork, chops, sausage, game, roast veal, meringues and biscuits, baked fruit, etc.

NEW OVEN A ENERGY CLASS

HEAT-INSULATED DOOR
Three special glasses keep the heat inside the oven allowing the temperature on the outer glass to remain low. Internal glasses and door can be easily removed for cleaning.

INSULATION
It is obtained through the use of high-density glass -wool panels and reflecting alluminium sheets. All this has been studied to guarantee uniformity of temperature and energy saving.

Class A for performance and consumption (according to European standards)
The design solutions that characterise the ovens are now extended to the whole range. This is demonstrated by the Energy Label, the European standard introduced in January 2003, which classifies ovens according to their energy consumption.

Electronic programmer

TECHNICAL CHARACTERISTICS

ELECTRIC IGNITION INCLUDED IN THE KNOBS

... just press a knob and the burner will light up.

MULTI-GAS BURNERS

With stabilized flame, they eliminate eventual flame extincions due to draught or liquid overflow. Enamelled grilles.
Triple ring burner ø 120 - 15.500 Btu
Big burner ø 70 - 10.500 Btu
Small burner ø 55 - 7.000 Btu
Fish burner / Fry-Top burner 10.500 Btu
Enamelled removable burner cup for easy cleaning.
Sturdy cast iron grates.

Fry-Top - Professional, Majestic, Quadra, Classic

GAS FRY-TOP (GRIDDLE)

Thick plate of stainless steel ($^5/_{16}$") to obtain uniform temperature all over the surface for natural cooking of meat, fish, vegetables, etc.

Coup de Feu

COUP DE FEU

The large cast iron "Coup de Feu" is fed by a gas burner (8.500 Btu). Designed to have an indirect heating, thus enabling genuine cooking. Perfect for any sauces, for grilling and browning. It can be used as dish-warmer.

THERMOCOUPLE

All cookers are fitted with thermocouple as standard supply. Upon request some appliances will be supplied without thermocouple.

OPTIONALS

OVEN SLIDING TRAYS (cod. KGS30C - mini oven 30, KGS40C - midi oven 40, KGS60C - standard oven 60, KGS90C - maxi oven 90)
To ensure safety when moving the baking-pans and tray inside the oven. Also for more usefulness and improved ergonomic properties. The kit is composed of three pairs of sliding trays running on ball bearings to easily remove and position the baking pans. These sliding trays are self setting for added safety. The kit is equipped also with two pairs of fixed trays with 5 positions in total.

PIZZA PLATE 90 CM

PIZZA PLATE

A/418/04 - For mini-oven 30

A/418/00 - For standard oven 60

A/418/02 - For maxi-oven 90

BAKING PLATE

S/146/18 - For standard oven 60

S/146/08 - For maxi-oven 90

OPTIONALS

MESH INSERT
For broiling meat and fish, vegetables, toast, bruschetta, etc. (cod. A/092/59 - mini oven 30, A/092/49 - midi oven 40, A/092/60 - standard oven 60, A/092/61 - maxi oven 90)

OVEN TYPE	CODE
Mini oven 30	G/170/18
Midi oven 40	G/170/24
Standard Multifunction oven 60	G/170/22
Standard Fan Gas oven 60	G/170/25
Maxi Multifunction oven 90	G/170/23
Maxi Fan Gas oven 90	G/170/26

SELF-CLEANING PANELS
A special coating with the property to burn all greases deposited on the panels, so that the oven is always clean.

Removable burner cup cover

Small burner

Large burner

Triple ring burner

Fish burner

	CODE	Burners number	Fish burner included
BURNER CUP COVERS	KCT 45	4/5	No
	KCT 5PC	5	Yes
	KCT 6	6	Yes
	KCT 7	7	Yes
	KCT 8	8	Yes

OPTIONALS

GAS BARBECUE (GRILL) (cod. G/419/03)
(for models with Fry-top only).
The gas barbecue pan support is interchangeable with the Fry-top plate when grilling. The small reservoir tray collects the grease thus ensuring a genuine cooking.

COVER FOR FRY-TOP (cod. A/040/01).
The cooking steam remains inside the cover so that the food is more tender. An indispensable accessory for those who are fond of Japanese cooking "Tepanyaki".

CHOPPING BOARD (cod. A/484/01)
Solid, $^{15}/_{16}$" thickness. It fits perfectly into fry-top plate when cool.

BASINS FOR STEAM COOKING (cod. G/002/02).
It's composed from two containers with two lids. The steam cookings is a healthy method.
Ideal for vegetables, rice, flesh and fish.

FISH COOKING GRATES INTERCHANGEABLE WITH THE FRY-TOP (cod. G/092/81).

STAINLESS STEEL BASINS WITH LIDS FOR HEATING FOOD IN BAIN-MARIE (cod. G/002/01).
For models wirh Fry-top only. The kit requires the fish grill for the Fry-top (G/092/81). This consists of three baskets with covers and one container.

CAST IRON STEAK PAN
For low-fat cooking of hamburgers, steaks, etc. over a gas flame.

CAST IRON STEAK PAN RIBBED LARGE: CODE A/006/02

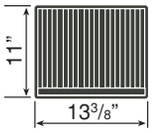

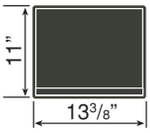

CAST IRON STEAK PAN FLAT LARGE: CODE A/006/08

CAST IRON STEAK PAN RIBBED SMALL: CODE A/006/04

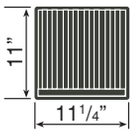

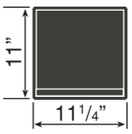

CAST IRON STEAK PAN FLAT SMALL: CODE A/006/06

CAST IRON WOK SUPPORT (cod. A/092/34)

OPTIONALS PROFESSIONAL

STAINLESS STEEL PLINTH KIT
h=4 3/4" - h=5 1/2"

DEALERS

DISPLAY UNIT WITH ALL ACCESSORIES SUITABLE FOT FRY-TOP (COD. E/OPT0001)

Professional Plus

PLATE WARMING DRAWER
Ideal for warming plates when the oven is in use.

COLOUR RANGE *HI-TECH*

STAINLESS-STEEL

STAINLESS-STEEL

GRAPHITE - MATT

COLOUR RANGE *Nostalgie*

EMERALD GREEN

BURGUNDY RED

GRAPHITE - MATT

MIDNIGHT BLUE

ANTIQUE WHITE

TRIM *Nostalgie*

KNOBS AND HANDLES IN BRASS AS STANDARD

KNOBS AND HANDLES IN CHROME UPON REQUEST

TRIM *HI-TECH*

STAINLESS STEEL KNOBS AND HANDLE

OPTIONALS

STANDARD

STAINLESS-STEEL FEET
Height $3^{15}/_{16}$" ÷ $6^{5}/_{16}$"

OPTIONAL

BRASS FEET (A/422/12)
CHROME FEET (A/422/16)
Height $5^{7}/_{8}$"

BRASS OR CHROME-PLATED HANDRAIL

STAINLESS STEEL HANDRAIL (Standard on Professional Plus)

Cooker's width (cm / inch)	HANDRAIL *Nostalgie* (brass)	HANDRAIL *Nostalgie* (chrome)	HANDRAIL Hi-Tech / Classic (st. steel)
60 / $23^{5}/_{8}$"	AMC-60	AMC-60X	AQC-60
90 / $35^{7}/_{16}$"	AMC-90	AMC-90X	AQC-90
100 / $39^{3}/_{8}$"	AMC-100	AMC-100X	AQC-100
120 / $47^{1}/_{4}$"	AMC-120	AMC-120X	AQC-120
150 / $59^{1}/_{16}$"	AMC-150	AMC-150X	AQC-150

24" «PROFESSIONAL PLUS» COOKING BLOCK *HI-TECH* UP-60

TECHNICAL CHARACTERISTICS
Standard 60 multifunction or convection gas oven.

4 burners	Multifunction oven	Convection gas oven
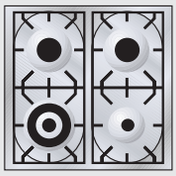	UPL-60-MP UPW-60-MP UPF-60-MP	UPL-60-VG UPW-60-VG UPF-60-VG

COLOUR RANGE

Stainless-Steel — Matt (UPF-60 only)

STAINLESS-STEEL TOP

UPF-60-MP

UPW-60-MP

UPL-60-MP

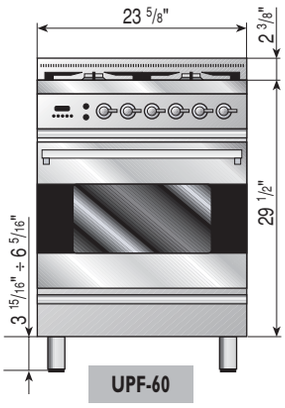

UPF-60

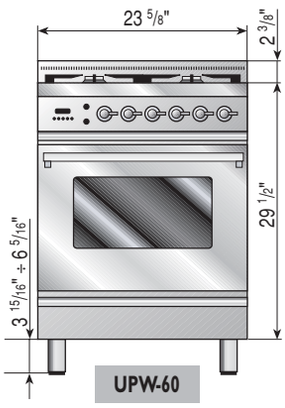

UPW-60

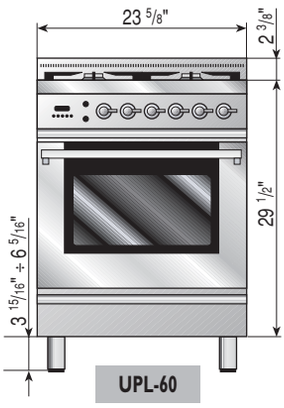

UPL-60

ILVE

36" «PROFESSIONAL PLUS» COOKING BLOCK *HI-TECH* UP-90

TECHNICAL CHARACTERISTICS

Maxi oven 90 in the multifunction or convection gas oven.

6 burners 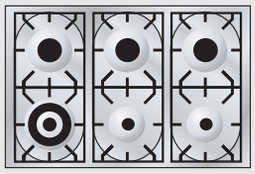	Multifunction oven **UPL-906-MP** **UPW-906-MP** **UPF-906-MP**	Convection gas oven **UPL-906-VG** **UPW-906-VG** **UPF-906-VG**
Fish burner 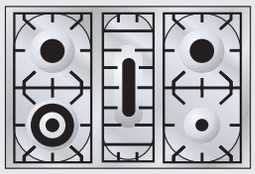	Multifunction oven **UPL-90-MP** **UPW-90-MP** **UPF-90-MP**	Convection gas oven **UPL-90-VG** **UPW-90-VG** **UPF-90-VG**
Fry-Top 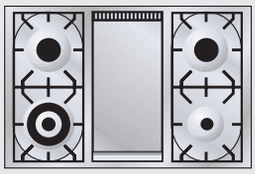	Multifunction oven **UPL-90F-MP** **UPW-90F-MP** **UPF-90F-MP**	Convection gas oven **UPL-90F-VG** **UPW-90F-VG** **UPF-90F-VG**

COLOUR RANGE

Stainless-Steel — Matt (UPF-90 only)

STAINLESS-STEEL TOP

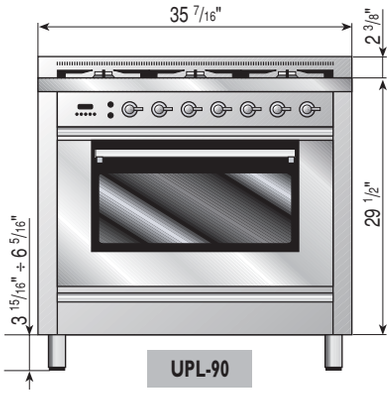

UPL-90

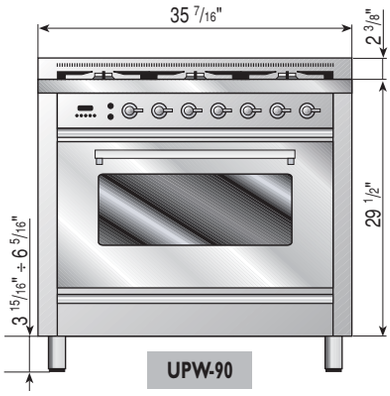

UPW-90

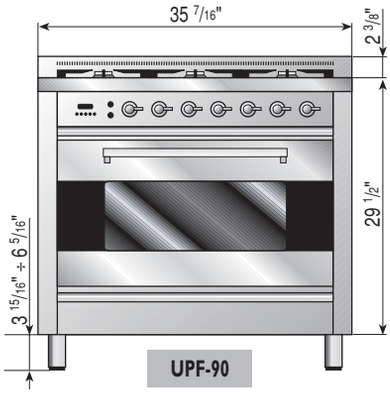

UPF-90

36" «PROFESSIONAL PLUS» COOKING BLOCK *HI-TECH* UPD-90

TECHNICAL CHARACTERISTICS

Oven on the left: **standard 60** in the multifunction or convection gas oven. Oven on the right: **mini 30** electric bake oven.

6 burners 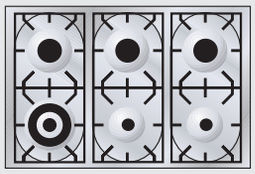	Multifunction oven **UPDL-906-MP** **UPDW-906-MP** **UPDF-906-MP**	Convection gas oven **UPDL-906-VG** **UPDW-906-VG** **UPDF-906-VG**
Fish burner 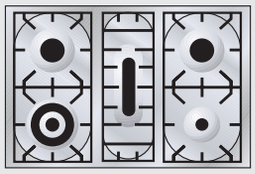	Multifunction oven **UPDL-90-MP** **UPDW-90-MP** **UPDF-90-MP**	Convection gas oven **UPDL-90-VG** **UPDW-90-VG** **UPDF-90-VG**
Fry-Top 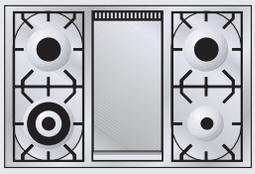	Multifunction oven **UPDL-90F-MP** **UPDW-90F-MP** **UPDF-90F-MP**	Convection gas oven **UPDL-90F-VG** **UPDW-90F-VG** **UPDF-90F-VG**

COLOUR RANGE

Stainless-Steel — Matt (UPDF-90 only)

STAINLESS-STEEL TOP

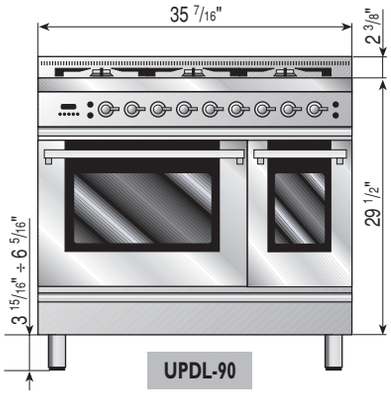

UPDL-90

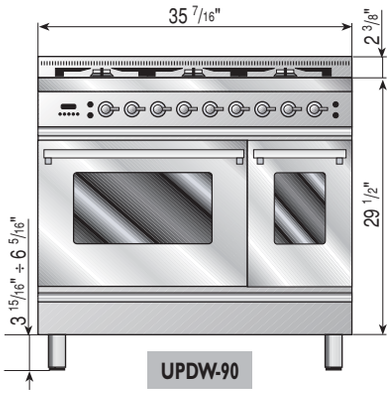

UPDW-90

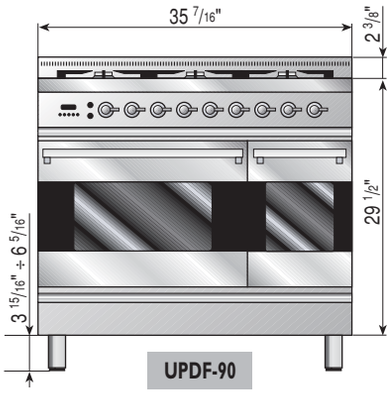

UPDF-90

40" «PROFESSIONAL PLUS» COOKING BLOCK *HI-TECH* UPD-100

TECHNICAL CHARACTERISTICS

Oven on the left: **standard 60** in the multifunction or convection gas oven. Oven on the right: **midi 40** electric bake oven.

6 burners 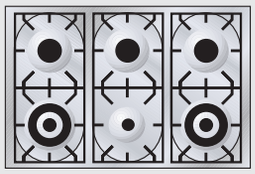	Multifunction oven **UPDL-1006-MP** **UPDW-1006-MP** **UPDF-1006-MP**	Convection gas oven **UPDL-1006-VG** **UPDW-1006-VG** **UPDF-1006-VG**
Fry-Top 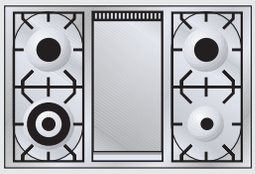	Multifunction oven **UPDL-100F-MP** **UPDW-100F-MP** **UPDF-100F-MP**	Convection gas oven **UPDL-100F-VG** **UPDW-100F-VG** **UPDF-100F-VG**
Coup De Feu 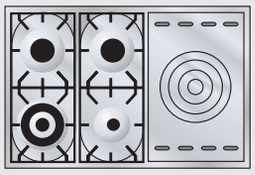	Multifunction oven **UPDL-100S-MP** **UPDW-100S-MP** **UPDF-100S-MP**	Convection gas oven **UPDL-100S-VG** **UPDW-100S-VG** **UPDF-100S-VG**

COLOUR RANGE

Stainless-Steel — Matt (UPDF-100 only)

STAINLESS-STEEL TOP

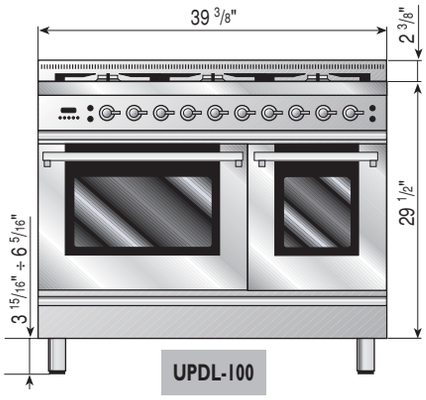

UPDL-100

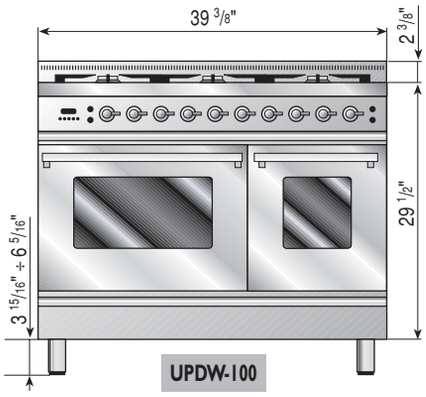

UPDW-100

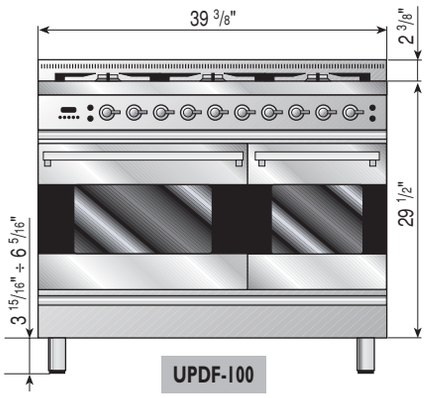

UPDF-100

ILVE

48" «PROFESSIONAL PLUS» COOKING BLOCK *HI-TECH* UP-120

TECHNICAL CHARACTERISTICS

Oven on the left: **maxi oven 90** in the multifunction or convection gas oven. Oven on the right: **mini 30** electric bake oven.

7 burners 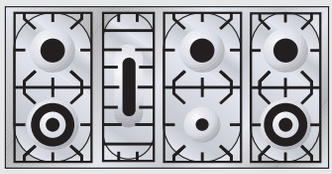	Multifunction oven **UPL-1207-MP** **UPW-1207-MP** **UPF-1207-MP**	Convection gas oven **UPL-1207-VG** **UPW-1207-VG** **UPF-1207-VG**
Fry-Top 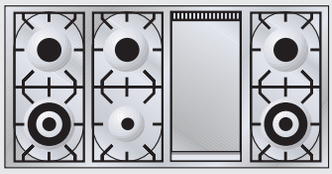	Multifunction oven **UPL-120F-MP** **UPW-120F-MP** **UPF-120F-MP**	Convection gas oven **UPL-120F-VG** **UPW-120F-VG** **UPF-120F-VG**
Coup De Feu 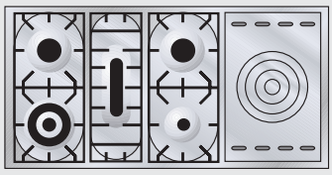	Multifunction oven **UPL-120S-MP** **UPW-120S-MP** **UPF-120S-MP**	Convection gas oven **UPL-120S-VG** **UPW-120S-VG** **UPF-120S-VG**

COLOUR RANGE

Stainless-Steel Matt (UPF-120 only)

STAINLESS-STEEL TOP

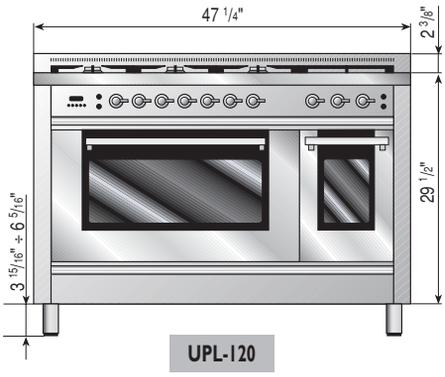

UPL-120

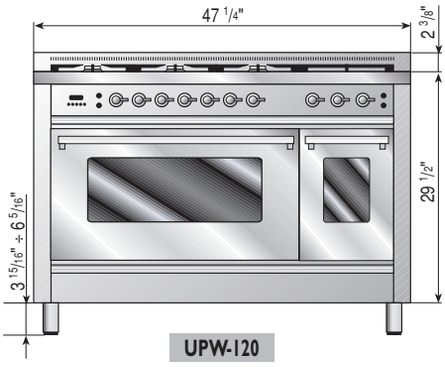

UPW-120

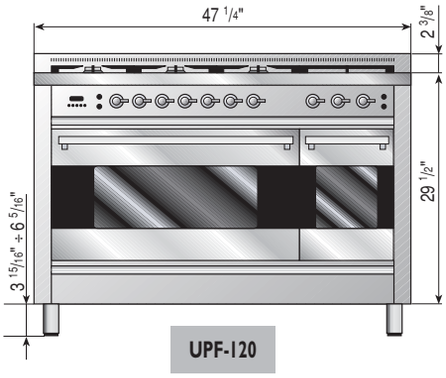

UPF-120

48" «PROFESSIONAL PLUS» COOKING BLOCK *HI-TECH* UPD-120

TECHNICAL CHARACTERISTICS

Oven on the left: **standard 60** in the multifunction or convection gas oven. Oven on the right: **standard 60** multifunction version.

	Multifunction oven	Convection gas oven
7 burners 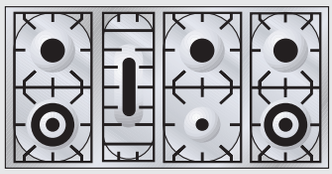	UPDL-1207-MP UPDW-1207-MP UPDF-1207-MP	UPDL-1207-VG UPDW-1207-VG UPDF-1207-VG
Fry-Top 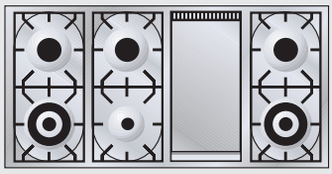	UPDL-120F-MP UPDW-120F-MP UPDF-120F-MP	UPDL-120F-VG UPDW-120F-VG UPDF-120F-VG
Coup De Feu 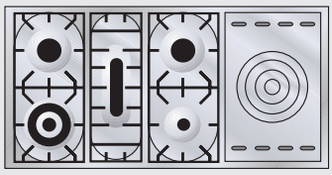	UPDL-120S-MP UPDW-120S-MP UPDF-120S-MP	UPDL-120S-VG UPDW-120S-VG UPDF-120S-VG

COLOUR RANGE

Stainless-Steel

Matt (UPDF-120 only)

STAINLESS-STEEL TOP

UPDL-120

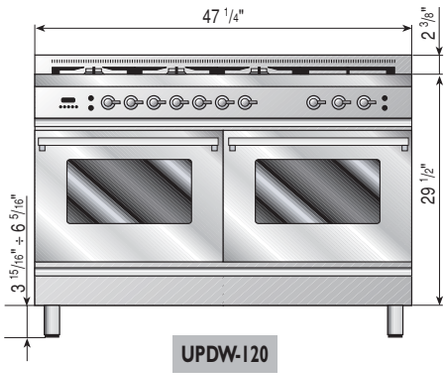

UPDW-120

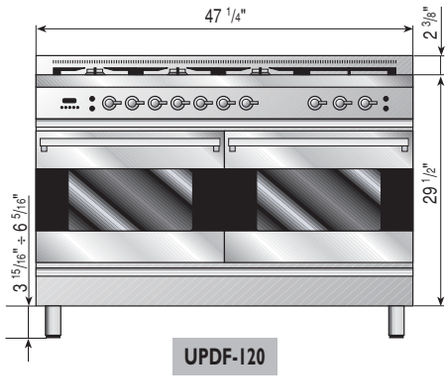

UPDF-120

60" «PROFESSIONAL PLUS» COOKING BLOCK *HI-TECH* UP-150

TECHNICAL CHARACTERISTICS

Oven on the left: **maxi oven 90** in the multifunction or convection gas oven. Oven on the right: **standard 60** multifunction version.

Fry-Top 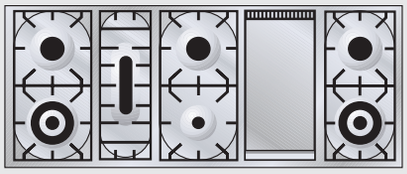	Multifunction oven **UPL-150F-MP** **UPW-150F-MP** **UPF-150F-MP**	Convection gas oven **UPL-150F-VG** **UPW-150F-VG** **UPF-150F-VG**
Coup De Feu 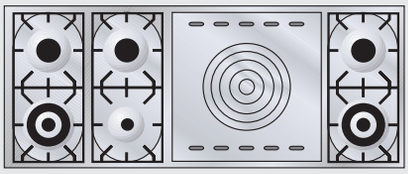	Multifunction oven **UPL-150S-MP** **UPW-150S-MP** **UPF-150S-MP**	Convection gas oven **UPL-150S-VG** **UPW-150S-VG** **UPF-150S-VG**
Fry-Top + Coup De Feu 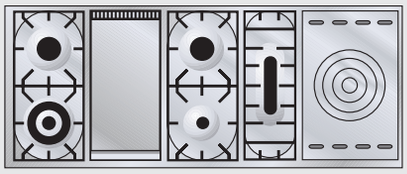	Multifunction oven **UPL-150FS-MP** **UPW-150FS-MP** **UPF-150FS-MP**	Convection gas oven **UPL-150FS-VG** **UPW-150FS-VG** **UPF-150FS-VG**

COLOUR RANGE

Stainless-Steel — Matt (UPF-150 only)

STAINLESS-STEEL TOP

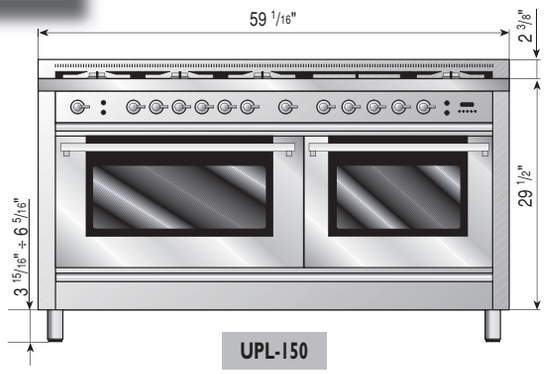

UPL-150

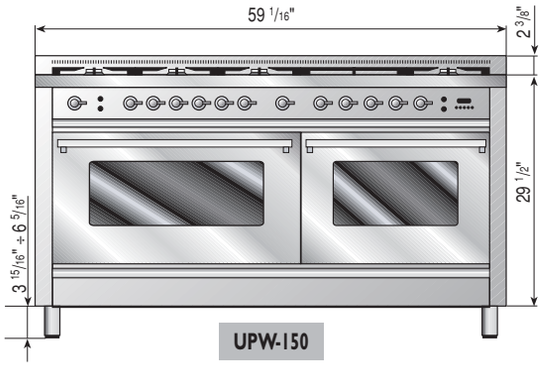

UPW-150

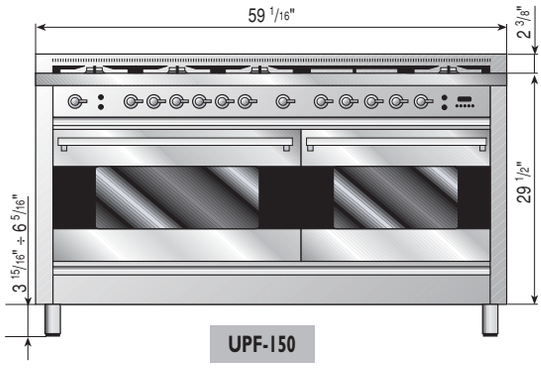

UPF-150

24" «PROFESSIONAL PLUS» COOKING BLOCK *Nostalgie* UPN-60

TECHNICAL CHARACTERISTICS
Standard 60 multifunction or convection gas oven.

4 burners	Multifunction oven	Convection gas oven
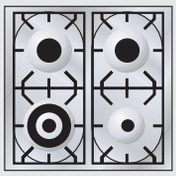	**UPN-60-MP**	**UPN-60-VG**

COLOUR RANGE

Stainless-Steel · Matt · Antique white
Burgundy · Blue · Green

STAINLESS-STEEL TOP

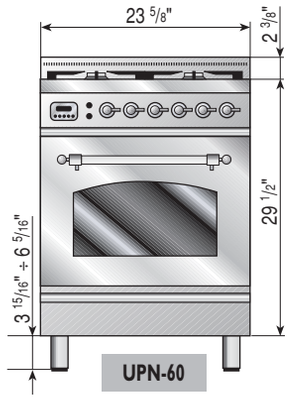

UPN-60

UPN-60-MP-RBX

ILVE

36" «PROFESSIONAL PLUS» COOKING BLOCK *Nostalgie* UPN-90

TECHNICAL CHARACTERISTICS

Maxi oven 90 in the multifunction or convection gas oven.

6 burners 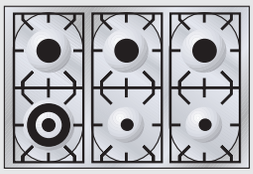	Multifunction oven **UPN-906-MP**	Convection gas oven **UPN-906-VG**
Fish burner 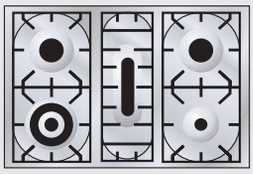	Multifunction oven **UPN-90-MP**	Convection gas oven **UPN-90-VG**
Fry-Top 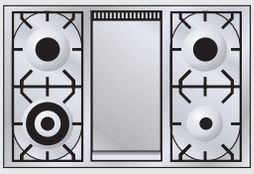	Multifunction oven **UPN-90F-MP**	Convection gas oven **UPN-90F-VG**

COLOUR RANGE

Stainless-Steel, Matt, Antique white

Burgundy, Blue, Green

STAINLESS-STEEL TOP

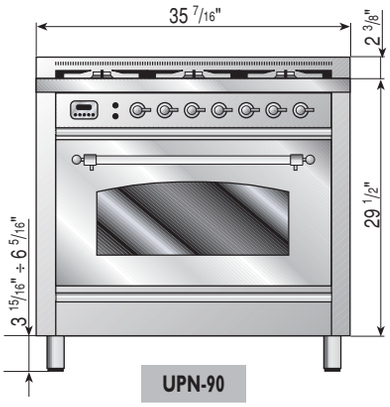

UPN-90

36" «PROFESSIONAL PLUS» COOKING BLOCK *Nostalgie* UPDN-90

TECHNICAL CHARACTERISTICS

Oven on the left: **standard 60** in the multifunction or convection gas oven. Oven on the right: **mini 30** electric bake oven.

6 burners 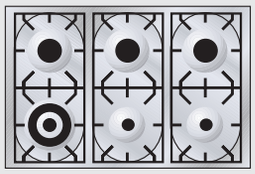	Multifunction oven **UPDN-906-MP**	Convection gas oven **UPDN-906-VG**
Fish burner 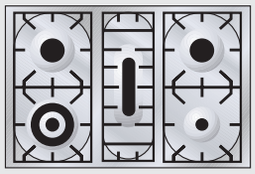	Multifunction oven **UPDN-90-MP**	Convection gas oven **UPDN-90-VG**
Fry-Top 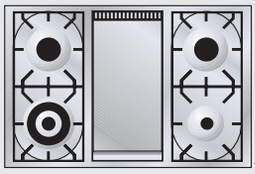	Multifunction oven **UPDN-90F-MP**	Convection gas oven **UPDN-90F-VG**

COLOUR RANGE

Stainless-Steel, Matt, Antique white

Burgundy, Blue, Green

STAINLESS-STEEL TOP

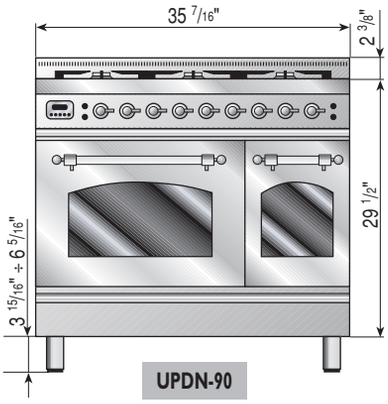

UPDN-90

40" «PROFESSIONAL PLUS» COOKING BLOCK *Nostalgie* UPDN-100

TECHNICAL CHARACTERISTICS

Oven on the left: **standard 60** in the multifunction or convection gas oven. Oven on the right: **midi 40** electric bake oven.

6 burners 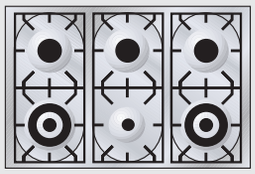	Multifunction oven **UPDN-1006-MP**	Convection gas oven **UPDN-1006-VG**
Fry-Top 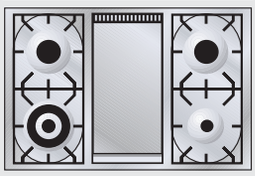	Multifunction oven **UPDN-100F-MP**	Convection gas oven **UPDN-100F-VG**
Coup De Feu 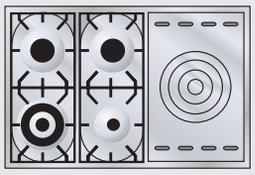	Multifunction oven **UPDN-100S-MP**	Convection gas oven **UPDN-100S-VG**

COLOUR RANGE

Stainless-Steel, Matt, Antique white, Burgundy, Blue, Green

STAINLESS-STEEL TOP

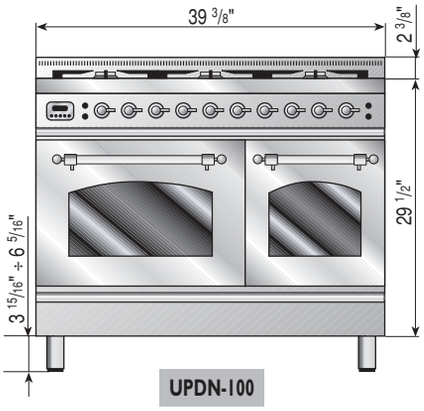

UPDN-100

48" «PROFESSIONAL PLUS» COOKING BLOCK *Nostalgie* UPN-120

TECHNICAL CHARACTERISTICS

Oven on the left: **maxi oven 90** in the multifunction or convection gas oven. Oven on the right: **mini 30** electric bake oven.

7 burners 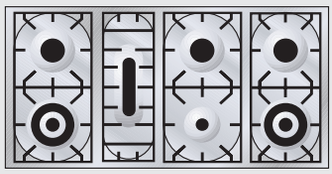	Multifunction oven **UPN-1207-MP**	Convection gas oven **UPN-1207-VG**
Fry-Top 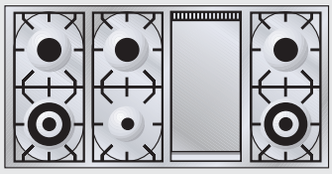	Multifunction oven **UPN-120F-MP**	Convection gas oven **UPN-120F-VG**
Coup De Feu 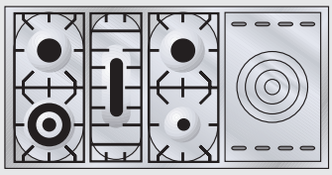	Multifunction oven **UPN-120S-MP**	Convection gas oven **UPN-120S-VG**

COLOUR RANGE

Stainless-Steel, Matt, Antique white

Burgundy, Blue, Green

STAINLESS-STEEL TOP

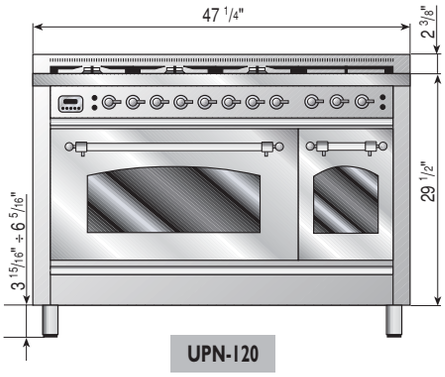

UPN-120

ILVE

48" «PROFESSIONAL PLUS» COOKING BLOCK *Nostalgie* UPDN-120

TECHNICAL CHARACTERISTICS

Oven on the left: **standard 60** in the multifunction or convection gas oven. Oven on the right: **standard 60** multifunction version.

7 burners 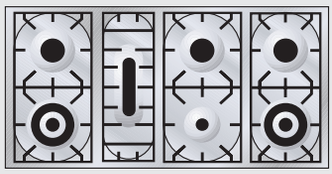	Multifunction oven **UPDN-1207-MP**	Convection gas oven **UPDN-1207-VG**
Fry-Top 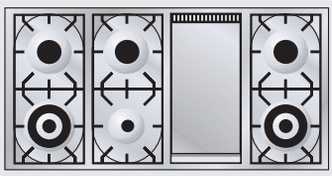	Multifunction oven **UPDN-120F-MP**	Convection gas oven **UPDN-120F-VG**
Coup De Feu 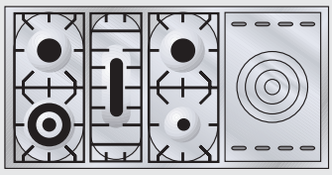	Multifunction oven **UPDN-120S-MP**	Convection gas oven **UPDN-120S-VG**

COLOUR RANGE

Stainless-Steel, Matt, Antique white

Burgundy, Blue, Green

STAINLESS-STEEL TOP

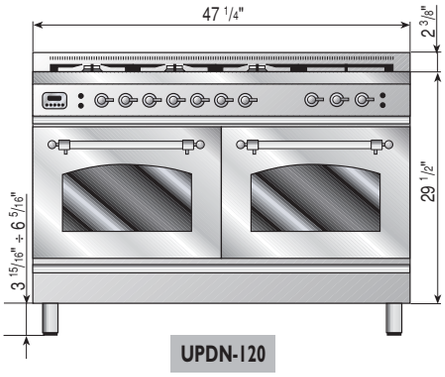

UPDN-120

ILVE

60" «PROFESSIONAL PLUS» COOKING BLOCK *Nostalgie* UPN-150

TECHNICAL CHARACTERISTICS

Oven on the left: **maxi oven 90** in the multifunction or convection gas oven. Oven on the right: **standard 60** multifunction version.

Fry-Top 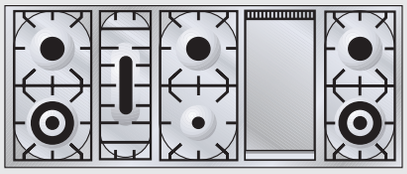	Multifunction oven **UPN-150F-MP**	Convection gas oven **UPN-150F-VG**
Coup De Feu 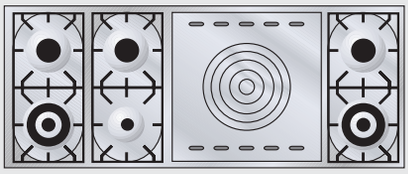	Multifunction oven **UPN-150S-MP**	Convection gas oven **UPN-150S-VG**
Fry-Top + Coup De Feu 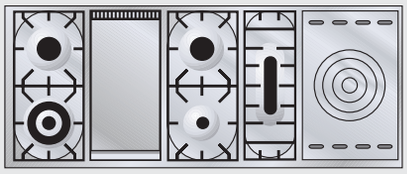	Multifunction oven **UPN-150FS-MP**	Convection gas oven **UPN-150FS-VG**

COLOUR RANGE

Stainless-Steel · Matt · Antique white

Burgundy · Blue · Green

STAINLESS-STEEL TOP

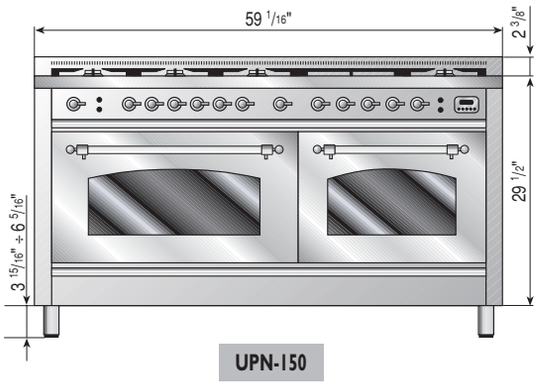

UPN-150

ELECTRICAL CONNECTION E GAS CONNECTION G

Mod. / inch	A	B
UP-60 / UPD-120	18 7/8"	6 5/16"
UP-90 / UP-120 / UP-150	29 1/2"	7 7/8"
UPD-90 / UPD-100	18 7/8"	7 7/8"

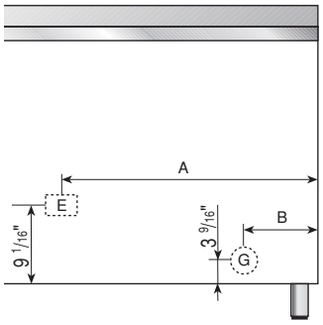

Rear view

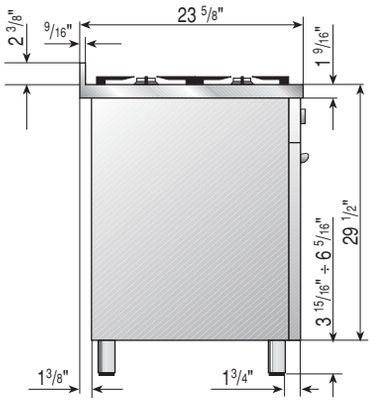

Side view

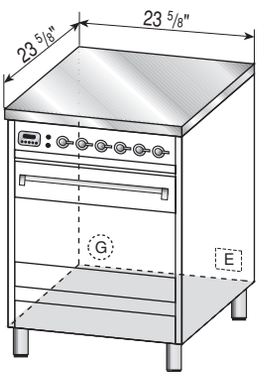

UP60

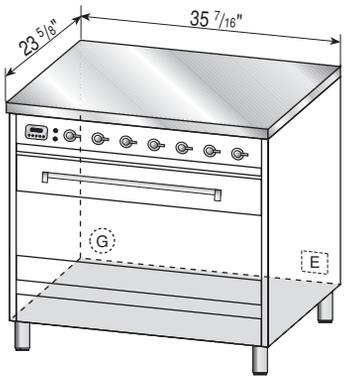

UP90

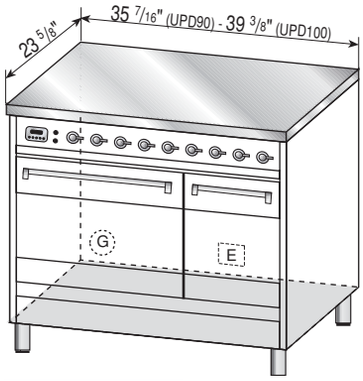

UPD90 - UPD100

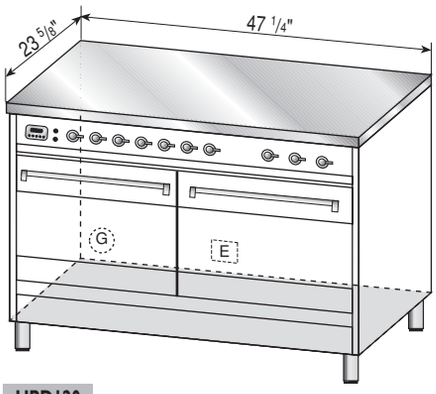

UPD120

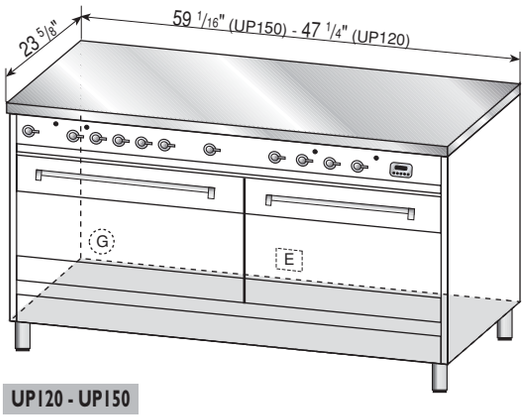

UP120 - UP150

«PROFESSIONAL» COOKERHOOD

800 mm Stainless Steel EXTENSION for UAG series Cookerhood

TECHNICAL CHARACTERISTICS
- Wall-mounted cookerhood;
- three speeds control;
- available in exhaust of filter version;
- anti-grease filter in anodised alluminium;
- halogen spotlight;
- 240V - 60 Hz;
- 35.000 cubic feet/h - 470 Pa.

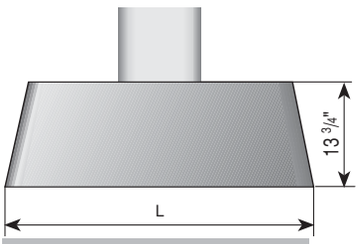

UAG series COOKERHOOD

COLOUR RANGE

OPTIONAL

Recirculating kits for range hoods that cannot be ducted to outside of house

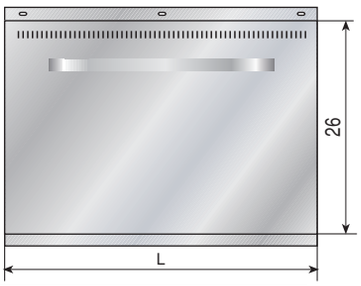

Stainless Steel BACKPANEL with ladles bracket

L (cm / inch)	UAG series COOKERHOOD	BACKPANEL with ladles bracket
60 / 23 5/8"	UAG-60	AP4-60
90 / 35 7/16"	UAG-90	AP4-90
100 / 39 3/8"	UAG-100	AP4-100
120 / 47 1/4"	UAG-120	AP4-120
150 / 59 1/16"	UAG-150	AP4-150

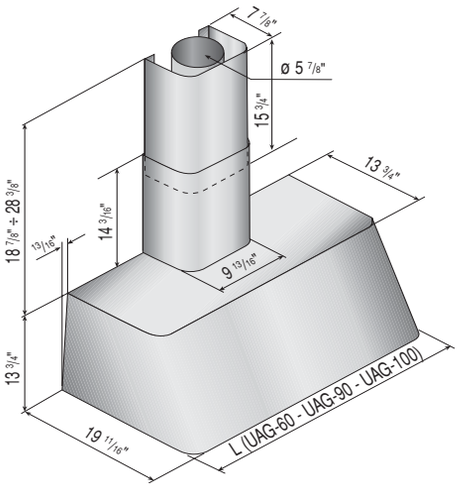

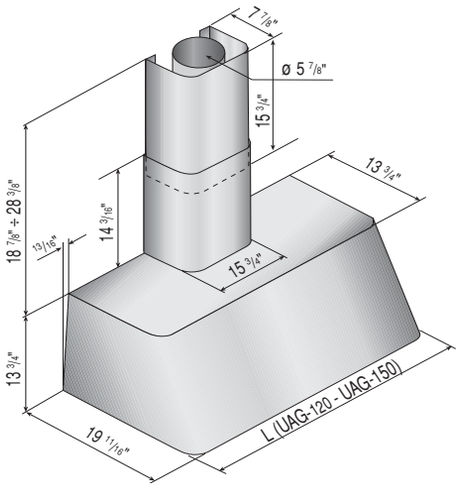

MAJESTIC COOKING BLOCK

PLATE WARMING DRAWER
Ideal for warming plates when the oven is in use.

DETAIL OF THE ROUNDED TOP
Besides giving a pleasant new appearance, it compensates the difference in depth between the kitchen units and the cooker, thus avoiding an impact between the two depths.

COLOUR RANGE

EMERALD GREEN

BURGUNDY RED

GRAPHITE MATT

STAINLESS-STEEL

ANTIQUE WHITE

MIDNIGHT BLUE

TRIM Majestic

KNOBS AND HANDLES IN BRASS AS STANDARD

KNOBS AND HANDLES IN CHROME UPON REQUEST

TRIM Majestic **Techno**

STAINLESS-STEEL FEET
Height $3^{15}/_{16}$" ÷ $6^{5}/_{16}$"

STAINLESS STEEL KNOBS AND HANDLE (TECHNO ONLY)

OPTIONALS Majestic

BRASS FEET (A/422/12)

CHROME FEET (A/422/16)
Height $5^{14}/_{16}$"

BRASS OR CHROME-PLATED HANDRAIL
For UM90 - UMD100 - UM120 - UM150 models

OPTIONALS Majestic **Techno**

STAINLESS STEEL PLINTH KIT
For UMT90 - UMTD100 - UMT120 - UMT150 models

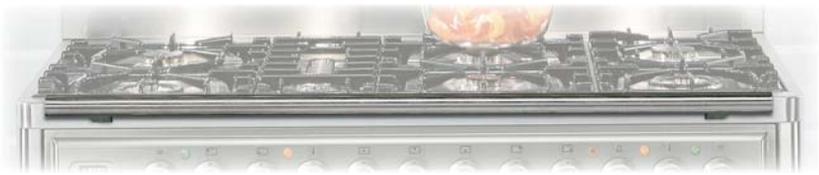

STAINLESS STEEL HANDRAIL
For UMT90 - UMTD100 - UMT120 - UMT150 models

TECHNICAL CHARACTERISTICS
Maxi oven 90 in the multifunction or convection gas version.

6 burners 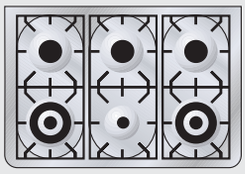	Multifunction oven **UMT-906-MP**	Convection gas oven **UMT-906-VG**
Fish burners 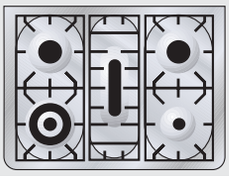	Multifunction oven **UMT-90-MP**	Convection gas oven **UMT-90-VG**
Fry-Top 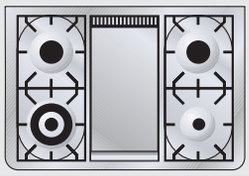	Multifunction oven **UMT-90F-MP**	Convection gas oven **UMT-90F-VG**

COLOUR RANGE

Stainless-Steel, Matt, Antique white, Burgundy, Blue, Green

STAINLESS-STEEL TOP

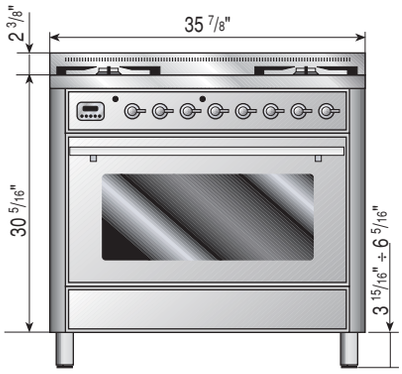

ILVE
Majestic

40" MAJESTIC COOKING BLOCK

Techno UMTD-100

TECHNICAL CHARACTERISTICS
Oven on the left: **standard 60** in the multifunction or convection gas version. Oven on the right: **mini 30** electric bake oven.

6 burners 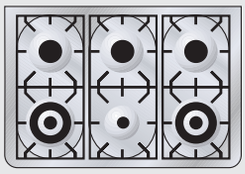	Multifunction oven **UMTD-1006-MP**	Convection gas oven **UMTD-1006-VG**
Fry-Top 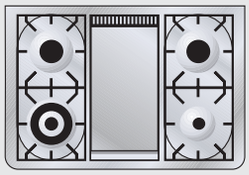	Multifunction oven **UMTD-100F-MP**	Convection gas oven **UMTD-100F-VG**
Coup De Feu	Multifunction oven **UMTD-100S-MP**	Convection gas oven **UMTD-100S-VG**

COLOUR RANGE

Stainless-Steel, Matt, Antique white, Burgundy, Blue, Green

STAINLESS-STEEL TOP

ILVE
Majestic

TECHNICAL CHARACTERISTICS
Oven on the left: **maxi oven 90** in the multifunction or convection gas version. Oven on the right: **mini 30** electric bake oven.

7 burners 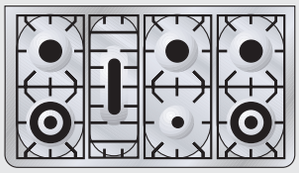	Multifunction oven **UMT-1207-MP**	Convection gas oven **UMT-1207-VG**
Fry-Top 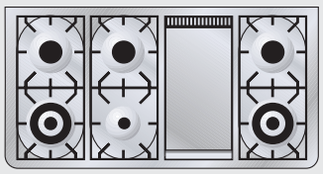	Multifunction oven **UMT-120F-MP**	Convection gas oven **UMT-120F-VG**
Coup De Feu 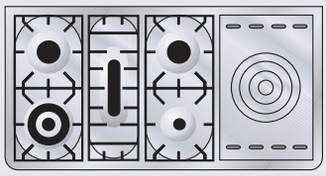	Multifunction oven **UMT-120S5-MP**	Convection gas oven **UMT-120S5-VG**

COLOUR RANGE

Stainless-Steel, Matt, Antique white, Burgundy, Blue, Green

STAINLESS-STEEL TOP

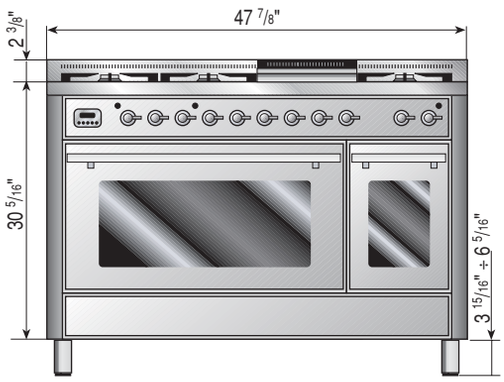

ILVE
Majestic

TECHNICAL CHARACTERISTICS
Oven on the left: **maxi oven 90** in the multifunction or convection gas version. Oven on the right: **standard 60** multifunction version.

Fry-Top 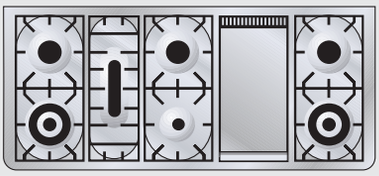	Multifunction oven **UMT-150F-MP**	Convection gas oven **UMT-150F-VG**
Coup De Feu	Multifunction oven **UMT-150S-MP**	Convection gas oven **UMT-150S-VG**
Fry-Top + Coup De Feu 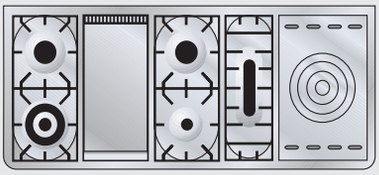	Multifunction oven **UMT-150FS-MP**	Convection gas oven **UMT-150FS-VG**

COLOUR RANGE

Stainless-Steel, Matt, Antique white, Burgundy, Blue, Green

STAINLESS-STEEL TOP

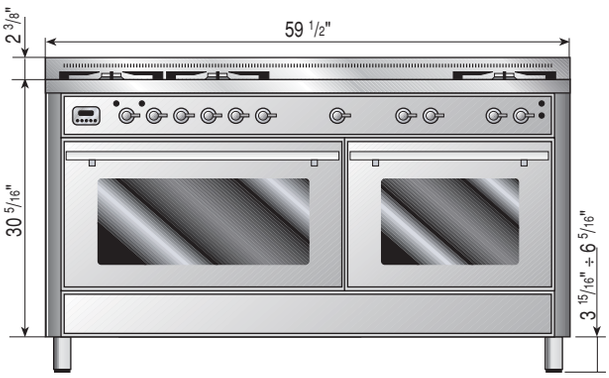

ILVE
Majestic

TECHNICAL CHARACTERISTICS
Maxi oven 90 in the multifunction or convection gas version.

6 burners 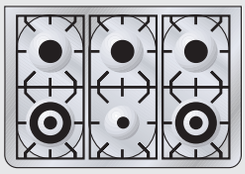	Multifunction oven **UM-906-MP**	Convection gas oven **UM-906-VG**
Fish burners 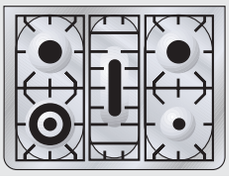	Multifunction oven **UM-90-MP**	Convection gas oven **UM-90-VG**
Fry-Top 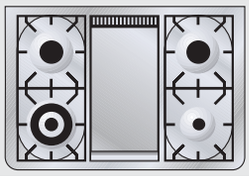	Multifunction oven **UM-90F-MP**	Convection gas oven **UM-90F-VG**

COLOUR RANGE

Stainless-Steel, Matt, Antique white

Burgundy, Blue, Green

STAINLESS-STEEL TOP

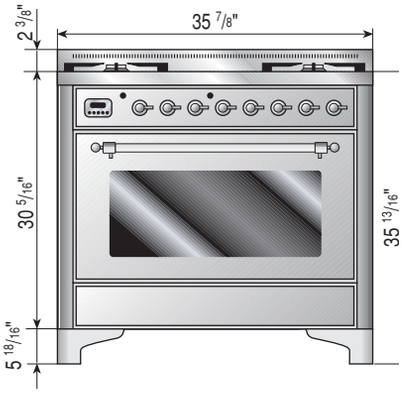

12
9
6
ANTEPRIMA
ILVE
Majestic

Majestic UMD-100

TECHNICAL CHARACTERISTICS
Oven on the left: **standard 60** in the multifunction or convection gas version. Oven on the right: **mini 30** electric bake oven.

6 burners 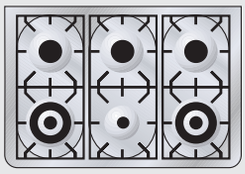	Multifunction oven **UMD-1006-MP**	Convection gas oven **UMD-1006-VG**
Fry-Top 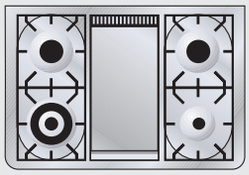	Multifunction oven **UMD-100F-MP**	Convection gas oven **UMD-100F-VG**
Coup De Feu	Multifunction oven **UMD-100S-MP**	Convection gas oven **UMD-100S-VG**

COLOUR RANGE

Stainless-Steel, Matt, Antique white, Burgundy, Blue, Green

STAINLESS-STEEL TOP

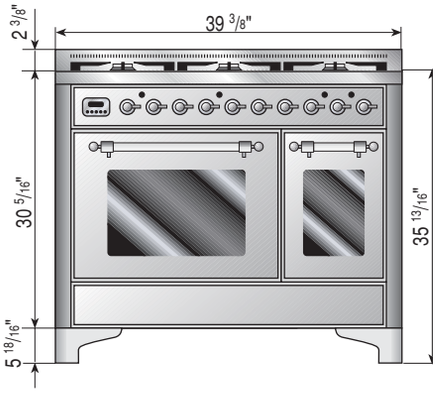

ILVE
Majestic

48" MAJESTIC COOKING BLOCK

Majestic **UM-120**

TECHNICAL CHARACTERISTICS
Oven on the left: **maxi oven 90** in the multifunction or convection gas version. Oven on the right: **mini 30** electric bake oven.

7 burners 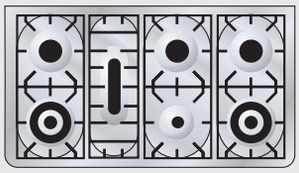	Multifunction oven **UM-1207-MP**	Convection gas oven **UM-1207-VG**
Fry-Top 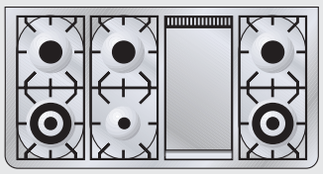	Multifunction oven **UM-120F-MP**	Convection gas oven **UM-120F-VG**
Coup De Feu 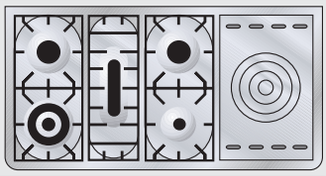	Multifunction oven **UM-120S5-MP**	Convection gas oven **UM-120S5-VG**

COLOUR RANGE

Stainless-Steel, Matt, Antique white, Burgundy, Blue, Green

STAINLESS-STEEL TOP

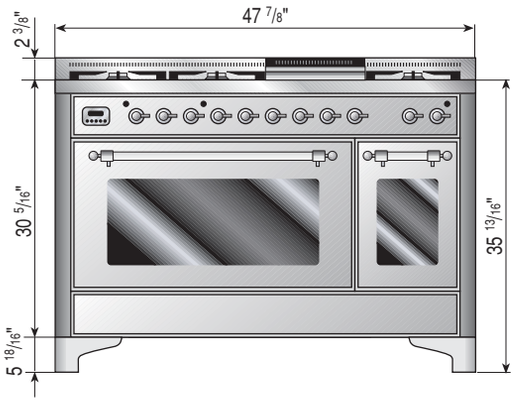

ILVE
Majestic

TECHNICAL CHARACTERISTICS
Oven on the left: **maxi oven 90** in the multifunction or convection gas version. Oven on the right: **standard 60** multifunction version.

Fry-Top 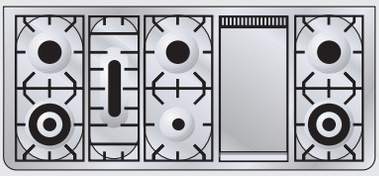	Multifunction oven **UM-150F-MP**	Convection gas oven **UM-150F-VG**
Coup De Feu	Multifunction oven **UM-150S-MP**	Convection gas oven **UM-150S-VG**
Fry-Top + Coup De Feu 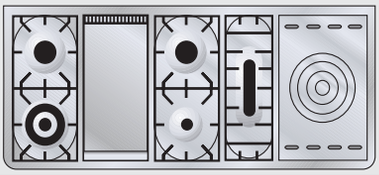	Multifunction oven **UM-150FS-MP**	Convection gas oven **UM-150FS-VG**

COLOUR RANGE

Stainless-Steel, Matt, Antique white, Burgundy, Blue, Green

STAINLESS-STEEL TOP

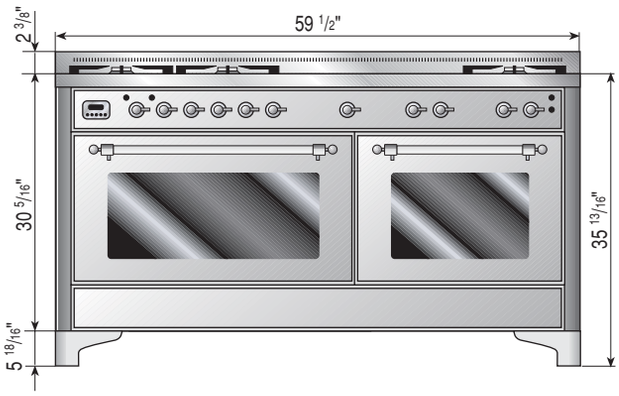

UM-150S-MP BLUE-X

ELECTRICAL CONNECTION E GAS CONNECTION G

Mod. / inch	A	B
UM-90 / UMT-90	29 1/2"	7 7/8"
UMD-100 / UMTD-100	18 1/8"	9 1/16"
UM-120 / UMT-120	27 9/16"	11 7/16"
UM-150 / UMT-150	28 3/4"	8 11/16"

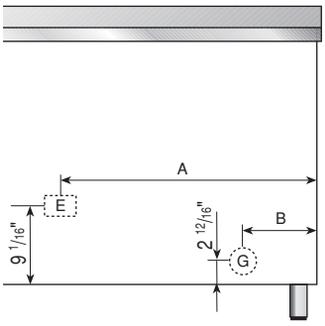

Rear view

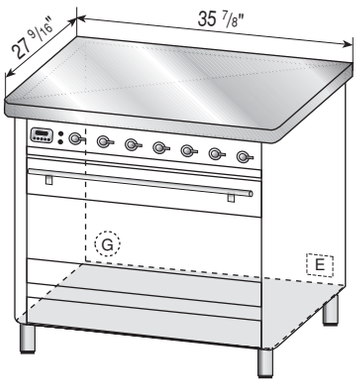

UM90 - UMT90

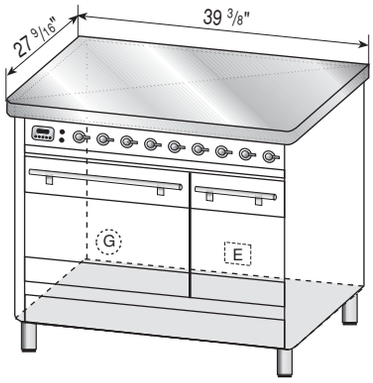

UMD100 - UMTD100

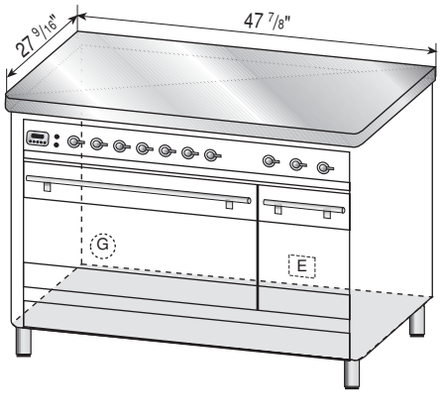

UM120 - UMT120

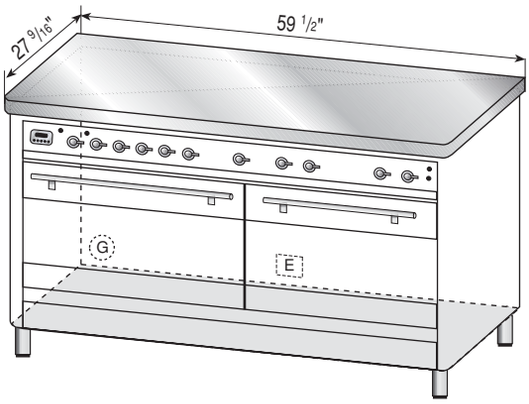

UM150 - UMT150

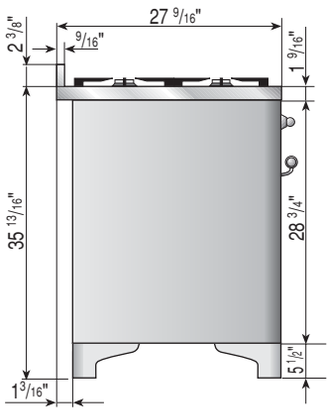

Majestic

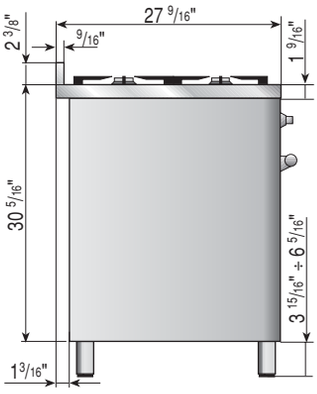

Majestic Techno

MAJESTIC COOKERHOOD

COLOUR RANGE

Stainless-Steel
Matt
Antique white
Burgundy
Blue
Green

STAINLESS-STEEL TOP

OPTIONAL

Recirculating kits for range hoods that cannot be ducted to outside of house

TECHNICAL CHARACTERISTICS

- Wall-mounted cookerhood;
- three speeds control;
- available in exhaust of filter version;
- anti-grease filter in anodised alluminium;
- 2 infrared spotlights, 175W each, for wall-mounted warmer;
- halogen lighting;
- optional (A/092/23): plate suport grid under the hood for model AM4 panels;
- 35.000 cubic feet/h - 510 Pa; 240V - 60 Hz.

800 mm Stainless Steel EXTENSION for UAM series Cookerhood

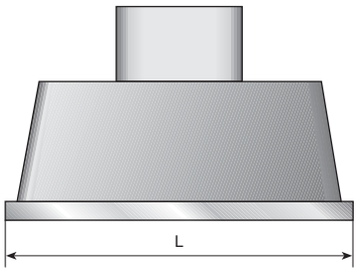

UAM series COOKERHOOD

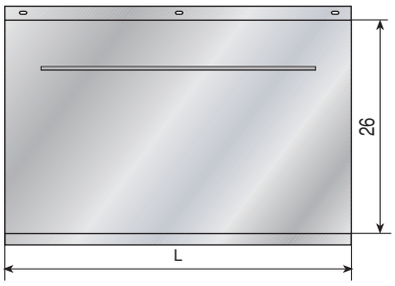

Stainless Steel BACKPANEL with ladles bracket

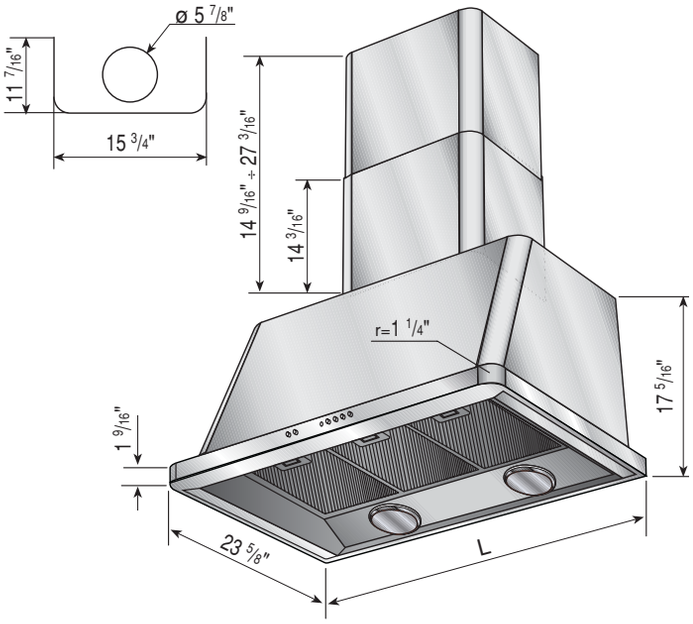

L (inch)	UAM series COOKERHOOD	Power Consumption	800 mm St.St. EXTENSION for UAM series cookerhood	BACKPANEL with ladles bracket
35 1/4"	UAM-90	750W	A/017/20/08	AM4-90
39 3/8"	UAM-100	750W	A/017/20/08	AM4-100
47 7/8"	UAM-120	790W	A/017/20/08	AM4-120
59 1/2"	UAM-150	790W	A/017/20/08	AM4-150