48” Rangetop with Griddle
Model: KMR 1356 G / KMR 1356 LP

KMR 1356 G / KMR 1356 LP
Features:

- Stainless Steel backlit knobs
- M Pro dual stacked burner system with TrueSimmer
- M Pro Griddle
- ComfortClean dishwasher-safe grates
- Clean Touch Steel™ front

SPECIFICATIONS	
KMR 1356 G — Item 26135650USA	
KMR 1356 LP — Item 26135651USA	
Overall Unit Width	48” (1219.2mm)
Overall Height from the base of the appliance to top, not including grates	7 1/2” (191mm)
Overall Unit Depth to the front of control panel	26 1/2” (673mm)
Niché	
Minimum Cabinet Width	48 1/16” + 1/16” (1220.8 — 1219.8mm)
Minimum Cabinet Depth to back of control panel	25 1/16” (636.6mm)
Burners	
Gas Burners:	(2) 12,000 BTU; (4) 19,000 BTU
Griddle:	(1) 15,000 BTU
Electrical	
Electrical Requirements	120V, 60Hz, 10 Amps
Power Cord	Yes - NEMA 5-15 plug, 4ft. long
Shipping	
Shipping Weight	187.4 lbs. (85kg)
Support	
Call	800.843.7231
20/20	2020technologies.com

PRODUCT VIEWS

Front View

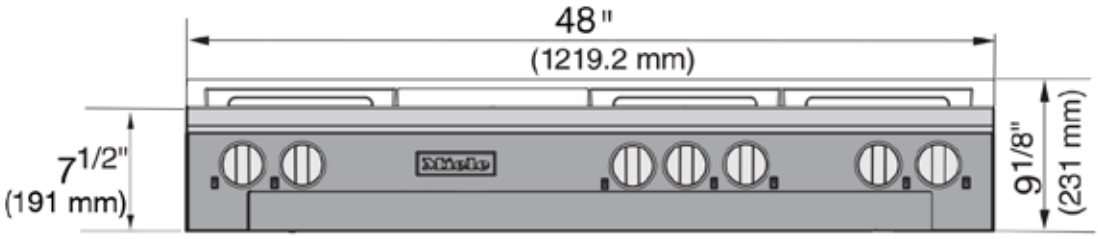

Side View

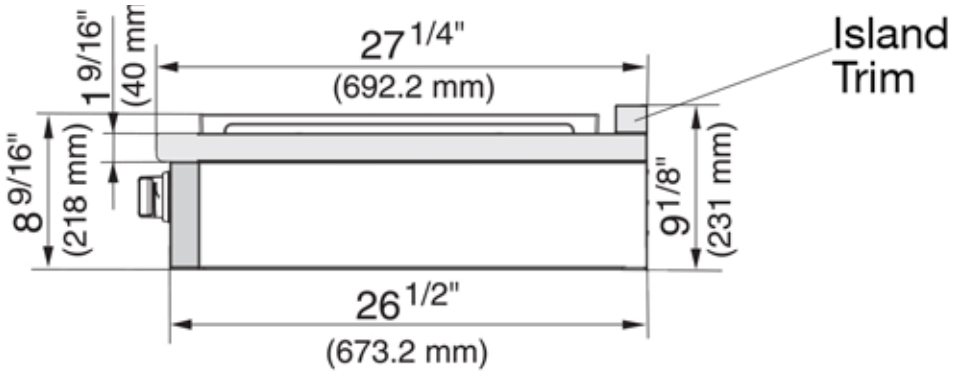

Rear View

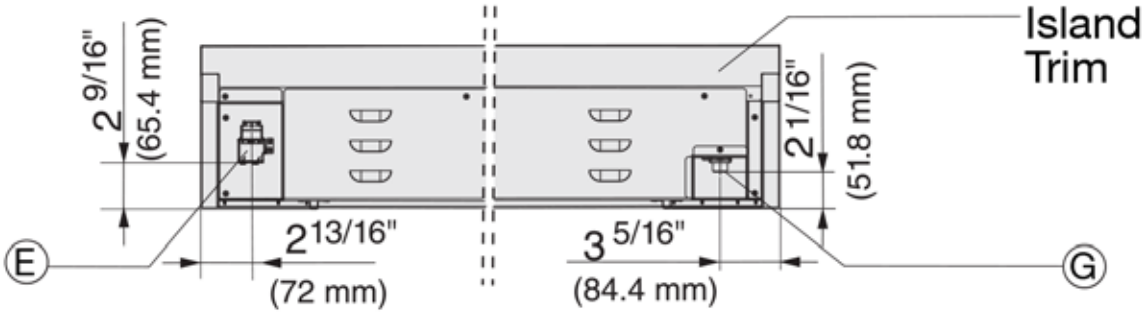

Length of power cord is 4 ft.

E = Electrical connection G = Gas connection

PRODUCT VIEWS

Cabinet View

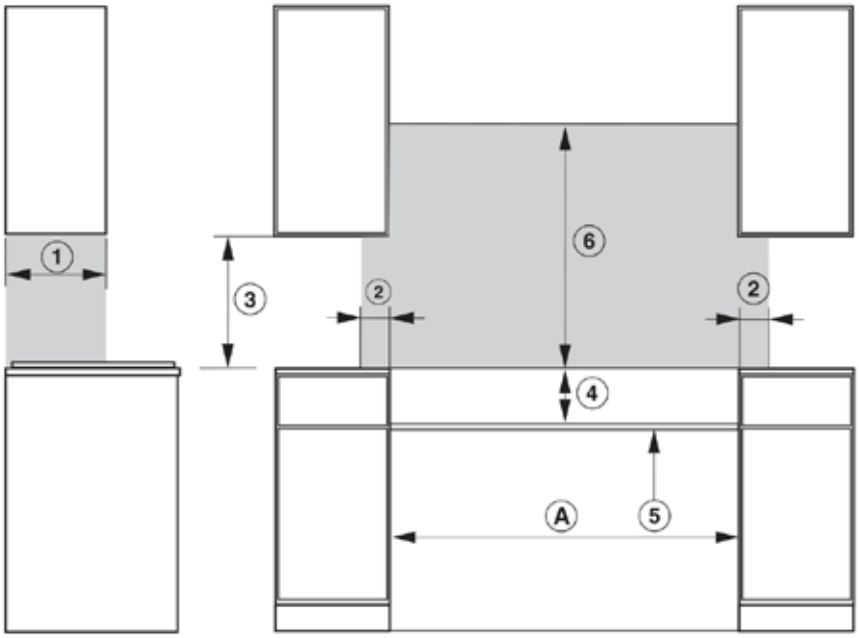

Position	Dimension	Description
1	13" (330 mm)	Maximum depth of top cabinet
2	6" (152 mm)	Minimum distance (left and right) to flammable surfaces
3	18" (547 mm)	Minimum distance to bottom edge of top cabinet
4	$7^1/_2$" (191mm)	Distance top edge of worktop to top edge of platform
5		Platform[1)]
6	30" (762 mm)	Minimum distance between the top of the cooking area and the bottom of an unprotected wooden or metal cabinet
A*	$48^1/_{16}$"+$^1/_{16}$" (1220.8 + 1.58mm)	Opening width

The gray areas represent the minimum distance from flammable surfaces.
1) The Platform must be $^3/_4$" (19.05 mm) thick.
It must include a cut-out of $5^1/_8$" x $3^1/_8$" (130 mm x 80 mm) (gas connection) at the rear right and a cut-out of $4^3/_4$" x $1^9/_{16}$" (120 mm x 40 mm) (elctrical connection) at the rear left.

For gas, electric and water connections, see Rear Product View