ELECTRIC RANGE

for residential use only

verona

C US

Models: VEFSEE 304 P..

USERS OPERATING INSTRUCTIONS

IMPORTANT - PLEASE READ AND FOLLOW

- Before beginning, please read these instructions completely and carefully.
- Do not remove permanently affixed labels, warnings, or plates from the product. This may void the warranty.
- Please observe all local and national codes and ordinances.
- Please ensure that this product is properly grounded.
- **The installer should leave these instructions with the consumer who should retain for local inspector's use and for future reference.**

Electrical installation must be in accordance with the National Electrical Code, ANSI/NFPA70 - latest edition and/or local codes.

IN CANADA: Electrical installation must be in accordance with the current CSA C22.1 Canadian Electrical Codes Part 1 and/or local codes.

Some models are supplied with a protective film on steel and aluminium parts. This film must be removed before installing/using the appliance.

THIS RANGE IS FOR RESIDENTIAL USE ONLY

WARNING !

To reduce the risk of tipping the appliance, the appliance must be secured by properly installed anti-tip device packed with the appliance.

- **ALL RANGES CAN TIP**
- **INJURY TO PERSONS COULD RESULT**
- **INSTALL ANTI-TIP DEVICE PACKED WITH RANGE**
- **SEE INSTALLATION INSTRUCTIONS**

Dear Customer,

Thank you for having purchased and given your preference to our product.

The safety precautions and recommendations reported below are for your own safety and that of others. They will also provide a means by which to make full use of the features offered by your appliance.

Please preserve this booklet carefully. It may be useful in future, either to yourself or to others in the event that doubts should arise relating to its operation.

This appliance must be used only for the task it has explicitly been designed for, that is for cooking foodstuffs. Any other form of usage is to be considered as inappropriate and therefore dangerous.

The manufacturer declines all responsibility in the event of damage caused by improper, incorrect or illogical use of the appliance.

This appliance is designed and manufactured solely for the cooking of domestic (household) food and in not suitable for any none domestic application and therefore should not be used in a commercial environmement.
The appliance warranty will be void if the appliance is used within a none domestic environmement i.e. a semi commercial, commercial or communal environment.

USER INSTRUCTIONS

GENERAL INFORMATION

1. **WARNING!!**

   This appliance shall not be used for space heating. This information is based on safety considerations.

2. All openings in the wall behind the appliance and in the floor under the appliance shall be sealed.

3. Keep appliance area clear and free from combustible materials, gasoline, and other flammable vapors.

4. Do not obstruct the flow of ventilation air.

5. Disconnect the electrical supply to the appliance before servicing.

6. When removing appliance for cleaning and/or service;
   A. Disconnect AC power supply.
   B. Carefully remove the range by pulling outward.
   CAUTION: Range is heavy; use care in handling.

7. **Electrical Requirement**
   Electrical installation should comply with national and local codes.

8. The misuse of oven door (e.g. stepping, sitting, or leaning on them) can result in potential hazards and/or injuries.

9. When installing or removing the range for service, a rolling lift jack should be used. Do not push against any of the edges of the range in an attempt to slide it into or out of the installation. Pushing or pulling a range (rather than using a lift jack) also increases the possibility of bending the leg spindles or the internal coupling connectors.

WARNING!!

ELECTRICAL GROUNDING INSTRUCTIONS

The range must be electrically grounded in accordance with local codes or, in the absence of local codes, with the National Electrical Code, ANSI/NFPA No. 70-latest edition, in Canada Canadian Electrical Code. Installation should be made by a licensed electrician.

Installation should be made by a licensed electrician.

FOR PERSONAL SAFETY, THIS APPLIANCE MUST BE PROPERLY GROUNDED.

If an external electrical source is utilized, the installation must be electrically grounded in accordance with local codes or, in the absence of local codes, with the national Electrical Code, ANSI/NFPA 70.

REPLACEMENT PARTS

Only authorized replacement parts may be used in performing service on the range. Replacement parts are available from factory authorized parts distributors. Contact the nearest parts distributor in your area.

IMPORTANT PRECAUTIONS AND RECOMMENDATIONS

After having unpacked the appliance, check to ensure that it is not damaged.
In case of doubt, do not use it and consult your supplier or a professionally qualified technician.
Packing elements (i.e. plastic bags, polystyrene foam, nails, packing straps, etc.) should not be left around within easy reach of children, as these may cause serious injuries. The packaging material is recyclable and is marked with the recycling symbol .

- Do not attempt to modify the technical characteristics of the appliance as this may become dangerous to use.
- Do not carry out cleaning or maintenance operations on the appliance without having previously disconnected it from the electric power supply.
- After use, ensure that the knobs are in OFF position.
- Do not allow children or other incapable people to use the appliance without supervision.
- During and after use of the range, certain parts will become very hot. Do not touch hot parts.
- Keep children away from the range when it is in use.
- Some models are supplied with a protective film on steel and aluminium parts. This film must be removed before installing/using the appliance.
- **Fire risk!** Do not store flammable material in the oven and in the warming drawer.
- Make sure that electrical cables connecting other appliances in the proximity of the range cannot come into contact with the hob or become entrapped in the oven door.
- Do not line the oven walls with aluminium foil. Do not place shelves, broiler pan, pans or other cooking utensils on the base of the oven chamber.
- The manufacturer declines all liability for injury to persons or damage to property caused by incorrect or improper use of the appliance.
- To avoid any possible hazard, the appliance must be installed by qualified personnel only. Any repairs by unqualified persons may result in electric shock or short circuit. In order to avoid possible injuries to your body or to the appliance, do not attempt any repairs by yourself. Such work should be carried out by qualified service personnel only.
- **Danger of burns!** The oven and cooking accessories may become very hot during operation. Make sure children are kept out of reach and warn them accordingly. To avoid burns use kitchen clothes and gloves when handling hot parts or utensils.
- Stand away from the range when opening oven door. Hot air or steam which escapes can cause burns to hands, face, and/or eyes.
- Never clean the range, oven and the warming drawer with a high-pressure steam cleaning device, as it may provoke a short circuit.
- In the case of a prolonged power failure:
  – if the oven door is locked during a self cleaning cycle, it remains locked as long as the power is restored and if the oven cavity has cooled to a temperature lower than 570°F (300°C). Pay special attention not to touch the front hot surfaces of the appliance and keep children well out of reach.
- This appliance is intended for use in your household. Never use the appliance for any other purpose!
- If you should decide not to use this appliance any longer (or decide to substitute an older model), before disposing of it, it is recommended that it be made inoperative in an appropriate manner in accordance to health and environmental protection regulations, ensuring in particular that all potentially hazardous parts be made harmless, especially in relation to children who could play with old appliances. Remove the door and the warming drawer before disposal to prevent entrapment.

IMPORTANT PRECAUTIONS AND RECOMMENDATIONS FOR USE OF ELECTRICAL APPLIANCES

Use of any electrical appliance implies the necessity to follow a series of fundamental rules.

In particular:

- Never touch the appliance with wet hands or feet.
- Do not operate the appliance barefooted.
- Do not allow children or disabled people to use the appliance without your supervision.

The manufacturer cannot be held responsible for any damages caused by improper, incorrect or unreasonable use of the appliance.

Fig. 1.1

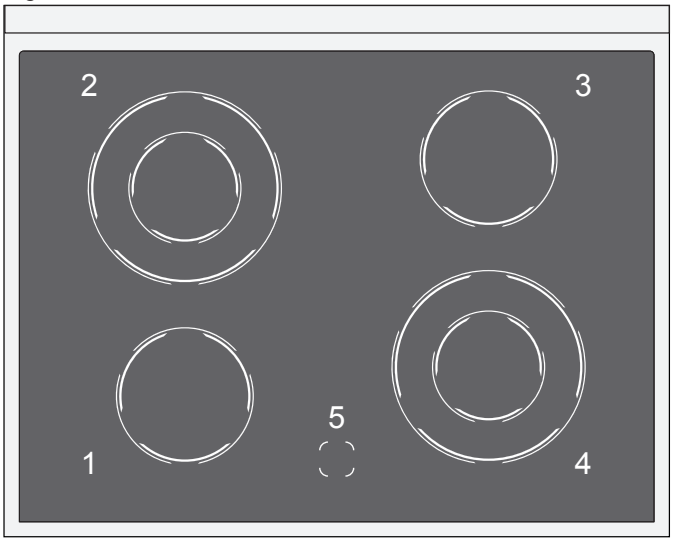

VITROCERAMIC COOKING HOB

1. Cooking zone Ø 145 (5” 23/32) - 1200 W
2. Double cooking zone Ø 205/110 (8” 1/16 / 4” 21/64) - 2100/700 W
3. Cooking zone Ø 145 (5” 23/32) - 1200 W
4. Double cooking zone Ø 205/110 (8” 1/16 / 4” 21/64) - 2100/700 W
5. Cooking zones residual heat indicators

Attention: Disconnect the appliance from the mains if the ceramic hob is cracked and call the After Sales Service.

CONTROL PANEL

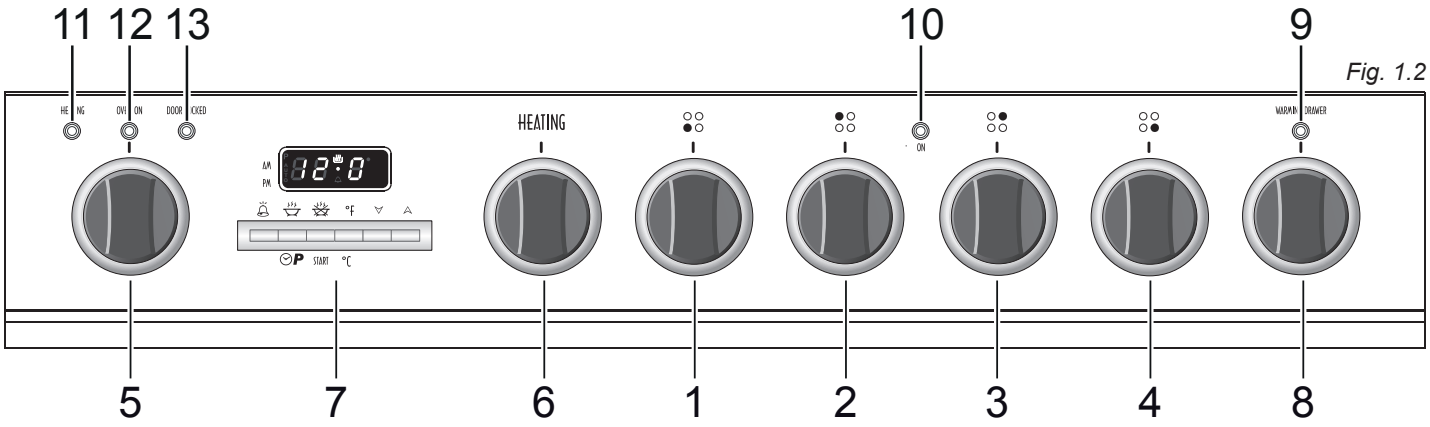

Fig. 1.2

CONTROLS DESCRIPTION

Cooking hob controls:

1. Front left cooking zone (1) control knob
2. Rear left cooking zone (2) control knob
3. Rear right cooking zone (3) control knob
4. Front right cooking zone (4) control knob

Oven controls:

5. Function selector knob
6. Temperature knob (potentiometer)
7. Electronic programmer
8. Warming drawer control knob
9. Warming drawer on pilot light
10. Cooking zones power indicator light
11. Oven heating pilot light
12. Oven on pilot light
13. Door locked pilot light

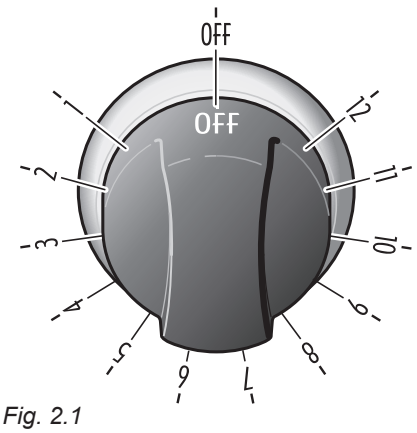

Fig. 2.1

VITROCERAMIC HOB

The ceramic surface of the hob allows a fast transmission of heat in the vertical direction, from the heating elements underneath the ceramic glass to the pans set on it.
The heat does not spread in a horizontal direction, so that the glass stays “cool” at only a few centimeters from the cooking plate.
The 4 cooking zones are shown by painted disks on the ceramic surface.

IMPORTANT NOTE:
The heating elements incorporate a thermolimiter that switches the element ON/OFF during all settings to protect the ceramic glass from overheating.
The use of incorrect pans and/or wrong pan positioning will cause the temperature limiter to operate more frequently, resulting in a reduction of cooking performance.

SINGLE COOKING ZONES

Incorporating the heating element (fig. 2.2) you can control and light up by selecting from the 12 positions on the control knob (fig. 2.1).
The heat intensity can be regulated continuously from “OFF” to “12” (max).

VERY IMPORTANT: TO SWITCH ON, ALWAYS LIGHTLY PRESS THE CONTROL KNOB THEN TURN IT.

Check that the hob is clean and then switch on by press and turning the control knob.

FRONT LEFT AND REAR RIGHT ZONE

Fig. 2.2

Important:
DURING THE SELF-CLEANING CYCLE THE VITROCERAMIC HOB COOKING ZONES DO NOT OPERATE.
If during self-cleaning cycle a cooking zone control knob has been turned ON return the knob to the OFF position. Otherwise at the end of the self-cleaning cycle and after having turned the oven selector control knob to the OFF position, the cooking zone will operate.

DOUBLE COOKING ZONE

Incorporating 2 heating elements you can control and light up together or separately by turning left or right the 6 positions control knob (fig. 2.3).
The heat intensity can be regulated continuously from “1” to “6” (max).

VERY IMPORTANT: TO SWITCH ON, ALWAYS LIGHTLY PRESS THE CONTROL KNOB THEN TURN IT.

SWITCH ON THE SMALL CENTRAL ZONE (fig. 2.5)
Press and turn in anticlockwise direction the control knob from “1” to “6” (max).

SWITCH ON THE ALL ZONE (fig. 2.4)
Press and turn in clockwise direction the control knob from “1” to “6” (max).

FRONT RIGHT AND
REAR LEFT ZONE
2 heating element ON

Fig. 2.4

Fig. 2.3

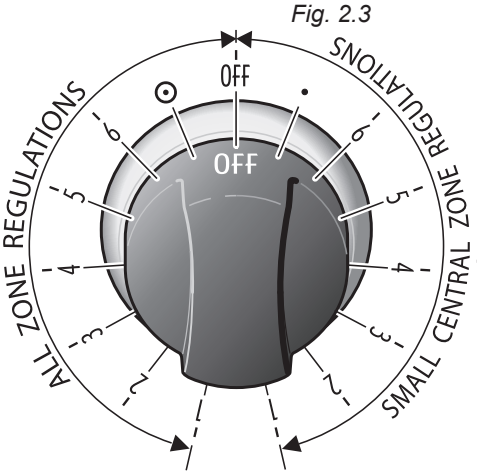

FRONT RIGHT AND
REAR LEFT ZONE
Central heating element ON

Fig. 2.5

COOKING ZONES POWER INDICATOR LIGHT (fig. 2.6)

When the ceramic hob is working, the "**ON**" pilot light in the control panel will be on (fig. 2.6).

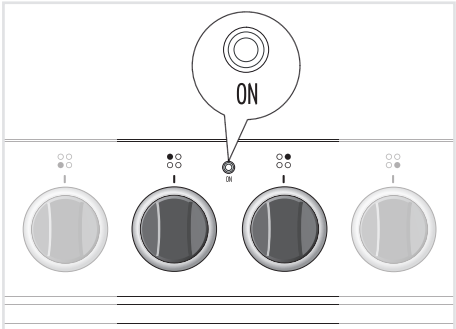

Fig. 2.6

COOKING ZONES RESIDUAL HEAT INDICATORS

IMPORTANT

When the temperature of a cooking zone is above 140 °F (60 °C), the relevant "**HOT SURFACE**" warning light in the vitroceramic hob (fig. 2.7) will come on to indicate that the zone is hot.

This light will stay on even after the cooking zone has been switched off to indicate that the zone is still hot.

The residual heat persists for some time after the cooking zone has been switched off.

During this time avoid touching the hob and take particular care if there are children nearby.

The light will go out automatically when the cooking zone temperature drops below 140°F (60 °C).

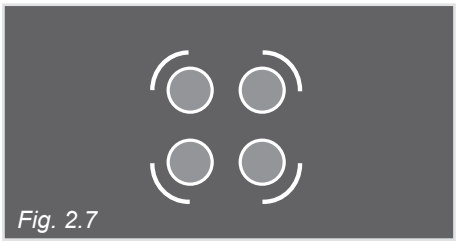

Fig. 2.7

HINTS FOR SAFE USE OF THE VITROCERAMIC HOB

- Before switching on, check which knob controls the required cooking zone. You are advised to place the saucepan on the hob before switching on and to take it off after switching off.
- To switch on, always lightly press the control knob then turn it.
- Use saucepans with an even flat bottom (be careful of cast iron saucepans). Uneven bottoms can scratch the pyroceram surface. Check that the bottom is clean and dry.
- The diameter of the pan should match that of the cooking zone (or be slightly bigger) to make the most of the energy.
- Pots with aluminium bottoms may leave silver streaks or spots on the hob.
- Do not leave wet or damp lids on the hob.
- Do not use the top if the surface is broken or damaged.
- **If you note a crack in the cooktop, switch the appliance off immediately and call the After-Sales Service.**
- Do not bend over the cooking zones when they are on.
- Do not leave aluminium foil, greaseproof paper etc. or plastic on the hob when it is hot.
- Remember that the cooking zones stay hot for quite a long time (approx. 30 min.) after they have been switched off.
- Scrupulously follow the cleaning instructions.
- Do not drop heavy or sharp objects on the glass ceramic cooktop.
- Never cook the food directly on the glass ceramic cooktop, but in special pans or containers.

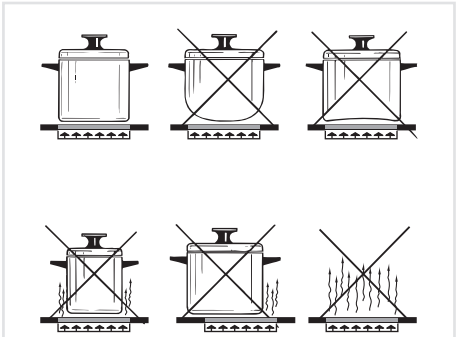

Fig. 2.8

Ensure that the handles of cookware do not stick out over the edge of the range, to avoid them being knocked over by accident. This also makes it more difficult for children to reach the cooking vessels.

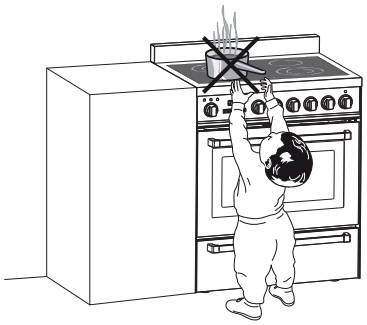

GENERAL FEATURES

The warming drawer is fitted with an heating element (500 W) placed on the top.
The heating can be regulated from 86°F (30°C) [LO min position] to 203°F (95°C) [HI max position].

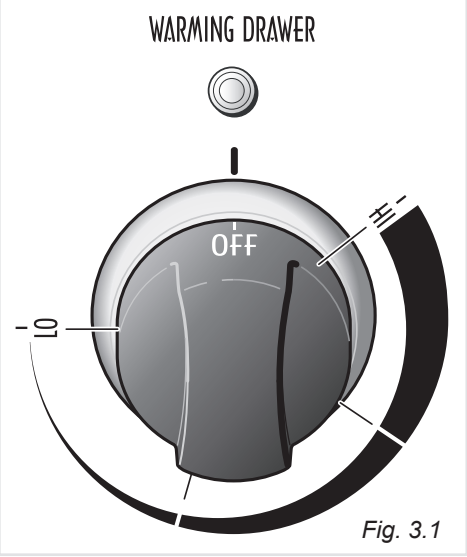

Fig. 3.1

USING THE WARMING DRAWER FOR THE FIRST TIME

- Switch on the empty warming drawer at maximum power for about 2 hours to remove traces of grease and smells from the components.
- When the warming drawer has cooled down and the range has been unplugged, clean the inside of the drawer with a cloth soaked in water and neutral detergent and dry it perfectly.

WARNING: The drawer is hot during operation, use the handle.

TO USE THE WARMING DRAWER

- Push and turn the control knob to a temperature setting: LO (min), HI (max) or between min and max position.
- Allow time for the drawer to be preheated.
- Preheat with rack in place if using that arrangement.
- Preheat empty serving dish while preheating the drawer.
- Add cooked, hot food in a cooking utensil or in a heat-safe serving dishes.
- Food may be kept hot in its cooking container or transferred to a heat-safe serving dish.
- Aluminum foil may be used to cover food.

WARNING:
The warming drawer is for keeping hot food hot. Never use it to warm or heat a room or to warm plates.

CORRECT USE OF THE WARMING DRAWER

- The warming drawer will keep hot cooked foods at serving temperature.
- Always start with hot food.
- Do not use to heat cold food other than proofing yeast dough, crisping crackers, chips, and dry cerea. Do not use to heat warming dishes or plates.
- Use care when opening the drawer. Open door a crack and let hot air or steam escape before removing or replacing food.
- Do not place food in unopened containers in the drawer. Pressure could build up and cause container to burst.
- Do not touch the interior surface of the drawer while it is in use. The interior of the drawer could become hot enough to cause burns.
- Use only dry potholders. Moist or damp potholders on hot surfaces may cause burns from steam. Do not use a towel or other bulky cloth in place of potholders. Do not let potholders touch hot heating element located upper the drawer.
- Do not use aluminum foil to line the drawer. Foil is an excellent heat insulator and will trap heat beneath it. This will upset the performance of the drawer and it could damage the interior finish.
- Do not store flammable materials in the drawer.
- Do not use plastic containers. Do not use no heat resistant containers.
- Do not use the warming drawer as a storage drawer.

CAUTION: Plastic containers or plastic wrap can melt if in direct contact with the drawer or a hot utensil. If it melts onto the drawer, it may not be removed.

IMPORTANT:
Don't operate the warming drawer during the self-cleaning cycle.
If during self-cleaning cycle the warming drawer control knob has been turned ON return the knob to the OFF (off) position. Otherwise at the end of the self-cleaning cycle and after having turned the oven selector control knob to the OFF (off) position, the warming drawer will operate.

Knob position	°F	°C
LO (min)	86	30
between LO (min) and HI (max)	from 87 to 202	from 31 to 94
HI (max)	203	95

TEMPERATURE SELECTOR

The setting can be anywhere between LO (min) and HI (max) position.

WARNING LIGHT

The warning light is located above the control knob and turns “ON’ when the warming drawer is set. It stays on until the knob is turned back to the OFF (off) position.

REVERSIBLE RACK

The rack shall be positioned as per figures 3.2 and 3.3.

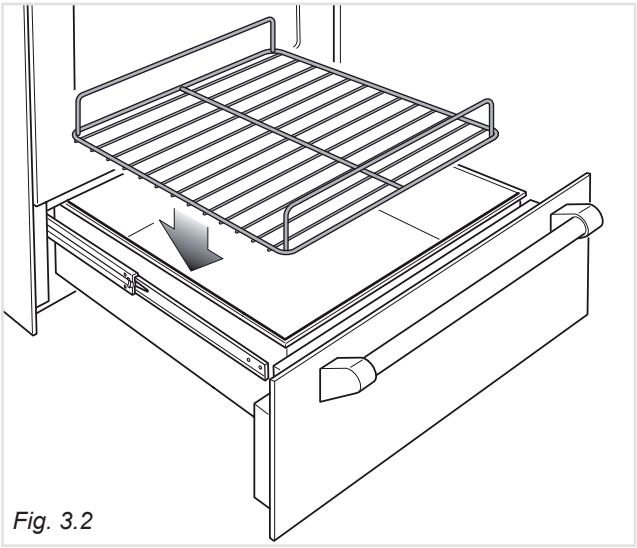

Fig. 3.2

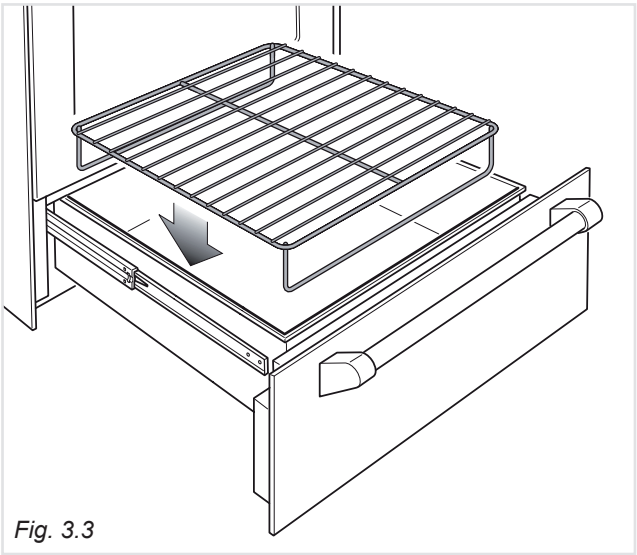

Fig. 3.3

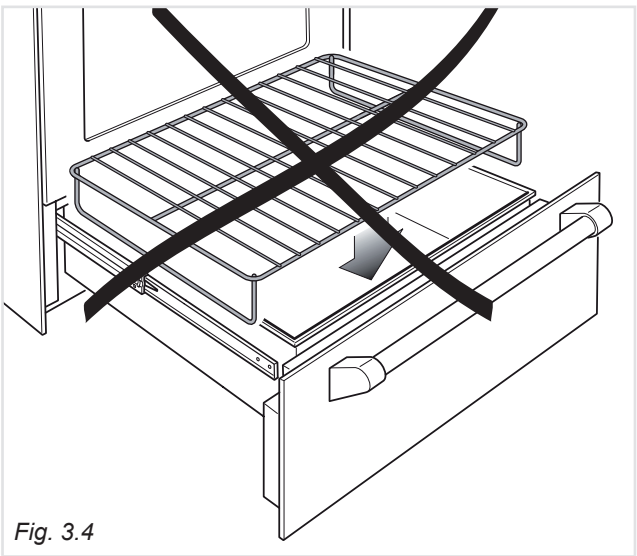

Fig. 3.4

GENERAL FEATURES

The oven has special operating features.
Five different functions can be used to satisfy all cooking needs; it also has a self cleaning function which can clean the oven cavity at high temperature, a defrost function and an oven light function.
These functions are managed by an electronic programmer which keeps the temperature set constant by means of a probe inside the oven cavity.
The oven has the following heating elements:

- Lower heating element (double) 550 + 1750 W
- Upper heating element 1200 W
- Grill heating element 2850 W
- Circular heating element 2450 W

NOTES ON OVEN OPERATION

A cooling fan starts automatically when selecting a cooking function, defrost or self cleaning mode.

It stops when turning the selector knob to **OFF** position or **LIGHT** and the inside oven cavity temperature drops below 150°C (302°F).

The purpose of this fan is to reduce the temperature inside/outside the appliance.

Note: The first time the oven is used or after a black-out the programmer must be started by pressing keys 2 and 3 simultaneously. See the section on the use of the electronic programmer.

USING THE OVEN FOR THE FIRST TIME

- Put in the shelf and the tray.
- Switch the oven on empty (on a cooking function – NOT SELF CLEANING) at maximum power for about 2 hours to remove traces of grease and smells from the components.
- When the oven has cooled down and unplugging the range, clean the inside of the oven with a cloth soaked in water and neutral detergent and dry it perfectly.

WARNING:
The door is hot, use the handle.

OPERATING PRINCIPLES

Heating and cooking in the multifunction self cleaning oven takes place as follows:

- **by normal convection**
  The heat is produced by the upper and lower heating elements.
- **by semi-forced convection**
  The heat produced by the upper and lower heating elements is distributed throughout the oven by the fan.
- **by forced convection**
  The heat produced by the circular element is distributed throughout the oven by the fan.
- **by radiation**
  The heat is radiated by the infra red broil element.
- **by radiation and fan**
  The radiated heat from the infra red broil element is distributed throughout the oven by the fan.
- **by ventilation**
  The food is defrosted by using the fan only function without heat.
  THIS IS NOT A COOKING FUNCTION
- **by self cleaning**
  The heat produced by the heating elements cleans the internal oven cavity removing all residue of grease.
  THIS IS NOT A COOKING FUNCTION

ATTENTION: The oven door becomes very hot during operation. Keep children away.

VERY IMPORTANT:
The oven shall be always used with the door closed.

NEVER USE THE RANGE WHEN THE OVEN IS OPERATING IN SELF CLEANING MODE.
DO NOT OPERATE THE TOP BURNERS.

WHEN THE SELF CLEANING MODE HAS BEEN COMPLETED: Do not immediately start a new self cleaning cycle. LET THE RANGE TO COOL DOWN.

IMPORTANT:
DON'T OPERATE THE WARMING DRAWER DURING THE SELF-CLEANING CYCLE. If during self-cleaning cycle the warming drawer control knob has been turned ON return the knob to the OFF position. Otherwise at the end of the self-cleaning cycle and after having turned the oven selector control knob to the OFF position, the warming drawer will operate.

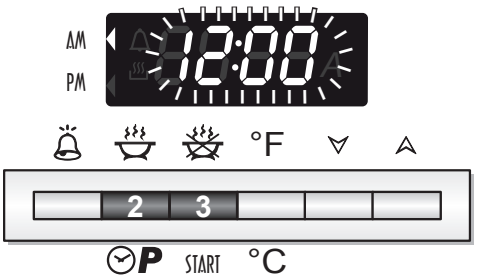

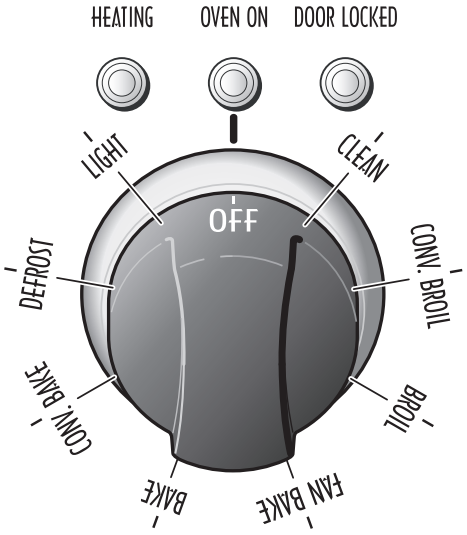

Fig. 4.1

SELECTING THE FUNCTIONS (figs. 4.1, 4.2a, 4.2b)

The function is selected by turning the function selector knob and matching the marking on the knob with the reference mark printed on the control panel.

IMPORTANT NOTE FOR THE COOKING FUNCTIONS: Once selecting the function and temperature (the temperature flashes on the programmer display - fig. 4.2a), press button 3 ("START") on the programmer to start the cooking (temperature and symbol steady lit on the programmer display - fig. 4.2b).

Important: In all cooking functions the oven must always be used with the DOOR CLOSED.

If the door stays open "**door**" flashes on the programmer display and after some minutes an audible warning sounds for about 30 seconds. To silence the audible warning press any programmer button.

NOTE: The heating elements work even with the door open and this signal just indicates that energy is being wasted and the control panel/knobs are excessively heated.

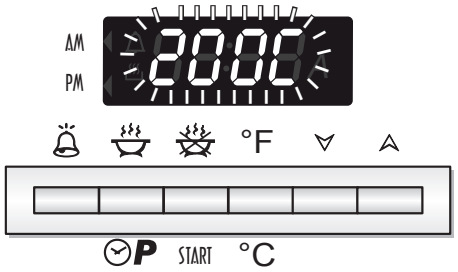

Fig. 4.2a

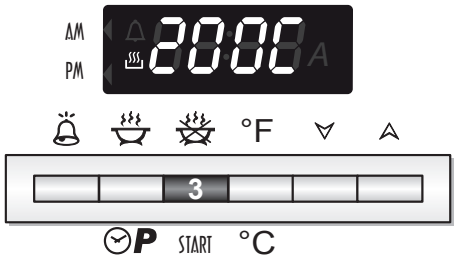

Fig. 4.2b

LIGHT (Oven Light - This is not a cooking function)

When turning the knob to this position only the oven lamps light up.
The lamps are always on in all the cooking functions (except for self cleaning cycle).

DEFROST (Defrosting Frozen Foods - This is not a cooking function)

Only the fan and the oven lamps switch on. Defrosting takes place by fan, without heating.
The electronic programmer shows **dEF**.

Recommended for:
To rapidly defrost frozen foods; 2.2 lbs (1 kg) requires about one hour.
The defrosting times vary according to the quantity and type of foods to be defrosted.

CONV.BAKE (Convection Cooking with Ventilation)

The circular element and the fan switch on.
The heat from the back is diffused by fan convection.
The temperature can be set between 120°F (50°C) and 535°F (280°C).
On selecting this function the electronic programmer starts cooking with a pre-heating temperature set at 355°F (180°C). To vary the temperature see the "SETTING THE COOKING" section.

Recommended for:
For foods of large volume and quantity which require the same internal and external degree of cooking; for ex: rolled roasts, turkey, legs, cakes, etc.

BAKE (Traditional Convection Cooking)

The upper and lower heating elements switch on.
The heat is diffused by natural convection and the temperature must be set between 120°F (50°C) and 535°F (280°C).
On selecting this function the electronic programmer starts cooking with a pre-heating temperature set at 390°F (200°C). To vary the temperature see the “SETTING THE COOKING” section.

Recommended for:
For foods which require the same cooking temperature both internally and externally, i. e. roasts, spare ribs, etc.

FAN BAKE (Traditional Convection Cooking With Fan)

The upper and lower heating elements and the fan are switched on.
The heat from the top and the bottom is diffused by fan convection.
The temperature can be set between 120°F (50°C) and 535°F (280°C).
On selecting this function the electronic programmer starts cooking with a pre-heating temperature set at 355°F (180°C).
To vary the temperature see the “SETTING THE COOKING” section.

Recommended for:
For foods of large volume and quantity which require the same internal and external degree of cooking; e.g. rolled roasts, turkey, legs, cakes, etc.

BROIL (Broiling)

The infrared heating element switches on.
The heat is diffused by radiation.
The temperature can be set between 120°F (50°C) and 520°F (270°C).
On selecting this function the electronic programmer starts cooking with a pre-heating temperature set at 410°F (210°C).
To vary the temperature see the “SETTING THE COOKING” section.
For correct use see the “BROILING” section.

Recommended for:
Intense broiling action for cooking with the broiler; browning, crisping, “broiling”, toasting, etc.

CONV.BROIL (Ventilated Broiling)

The infrared heating element and the fan switch on.
The heat is mainly diffused by radiation and the fan distributes it in the whole oven.
The temperature can be set between 120°F (50°C) and 520°F (270°C).
On selecting this function the electronic programmer starts cooking with a pre-heating temperature set at 430°F (220°C).
To vary the temperature see the “SETTING THE COOKING” section.
For correct use see the “VENTILATED BROILING” section.

Recommended for:
For grill cooking when a fast outside browning is necessary to keep the juices in, i. e. veal steak, steak, hamburger, etc.

CAUTION: During the self cleaning cycle the accessible parts may become hot. Keep children away.

NEVER USE THE RANGE WHEN THE OVEN IS OPERATING IN SELF CLEANING MODE.
DO NOT OPERATE THE TOP BURNERS

IMPORTANT: DO NOT OPERATE THE WARMING DRAWER DURING THE SELF-CLEANING CYCLE
If during self-cleaning cycle the warming drawer control knob has been turned ON return the knob to the OFF position. Otherwise at the end of the self-cleaning cycle and after having turned the oven selector control knob to the OFF position, the warming drawer will operate.

WHEN THE SELF CLEANING MODE HAS BEEN COMPLETED: do not start immediately a new self cleaning cycle on the oven.
LET THE RANGE COOL DOWN.

IMPORTANT:
The health of some birds is extremely sensitive to the fumes given off during the self-cleaning cycle.
Exposure to the fumes may result in death to certain birds.
Always move birds to another closed and well ventilated room.

CLEAN (Self Cleaning Function - this is not a cooking function)

IMPORTANT NOTES:
This is not a cooking function but is only used to clean the oven.
Before starting the self cleaning cycle:
- **Take all the accessories out of the oven (drip tray and shelves).**
- **Clean any traces of liquid which have overflowed.**
- **Close the oven door and make sure that it is closed properly.**

If there are cracks or flaws on the oven door glass (inside/ outside) or if the gaskets are ruined or worn or if the door does not close perfectly, disconnect the appliance from the electrical supply and contact the Service Centre.

GENERAL INFORMATION

- In this function the residual cooking greases on the inside walls of the oven cavity are pulverised by the high temperature. The fumes produced during this process are filtered by a special catalyst in the upper part of the appliance.
- Smells and fumes produced during self cleaning are not a cause of alarm. Adequate ventilation should however be provided in the room where the range is installed, e.g. by opening a window.
- Do not wait for the oven to be very greasy before performing this cleaning. It should not be performed after every cooking, either, but only when the level of dirt justifies it (on average 1 – 2 times a month depending on oven use).
- For safety reasons (high temperature of the oven cavity), when the self cleaning starts the oven door is automatically locked by an electronic device (after a few seconds, on the control panel, the DOOR LOCKED pilot light lights up). The door can no longer be opened and is only unlocked at the end of the cleaning cycle or, stopping the cycle, when the oven cavity has cooled to a temperature lower than 570°F (300°C).
- When the self cleaning function starts an internal fan starts automatically to cool the oven walls. It only stops at the end of the cycle, when the oven cavity temperature has dropped below 302°F (150°C).
- The procedures for starting, stopping and completing the self cleaning cycle and dealing with any problems are described in the following sections:
  - “HOW TO START THE SELF CLEANING CYCLE”;
  - “PROBLEMS ON STARTING AND DURING THE SELF CLEANING CYCLE”;
  - “HOW TO STOP THE SELF CLEANING CYCLE”;
  - “WHAT TO DO WHEN THE SELF CLEANING CYCLE HAS FINISHED”;
  - “ABNORMAL SITUATIONS AND/OR OPERATING PROBLEMS”.

SELECTING °F/°C ON THE DISPLAY

1. Turn the oven selector knob to a cooking function (i.e. BAKE).
2. Press key 5 on the programmer (or use the temperature knob) to reduce the temperature until you reach the minimum value (120°F/50°C).
3. Press key 3 on the programmer.
4. Keep key 4 pressed (the temperature flashes) until "**°F**" or "**°C**" is flashing; then press key 4 again to change from °F to °C or vice versa. During selection "**°C**" or "**°F**" is flashing.

After selecting °F or °C, turn the oven selector knob to the OFF position.

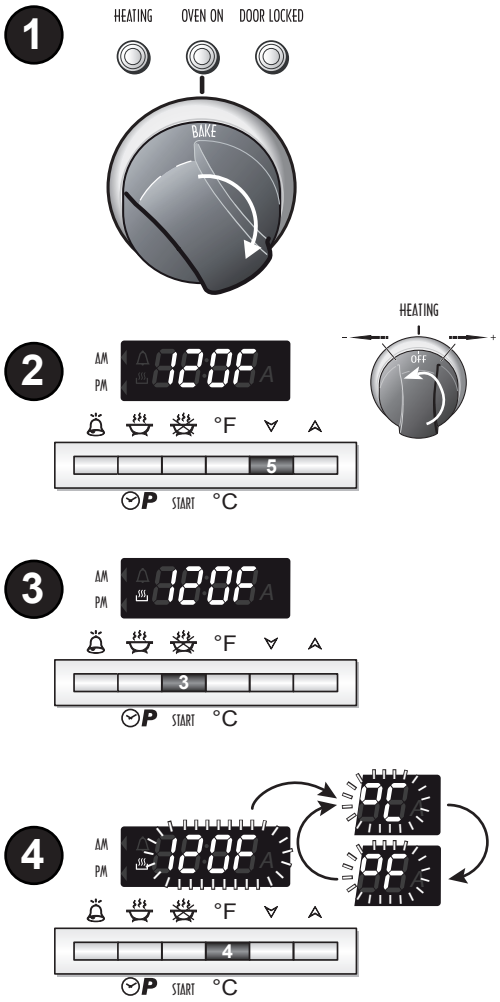

SETTING THE COOKING (ONLY FOR THE COOKING FUNCTIONS)

The temperature set is shown on the electronic programmer display and can be varied, with 5°F (5°C) intervals, by means of the programmer keys or the temperature knob.
During cooking the oven temperature (°F or °C) is measured by a sensor inside the cavity and is shown on the programmer display until set temperature is reached. If set temperature is less than inside oven temperature, the display shows the set temperature.

1. **SELECTING THE COOKING FUNCTION**
   Turn the selector knob to the cooking function required.
2. **SETTING THE COOKING TEMPERATURE**
   The pre-set temperature appears on the programmer display.
   Turn the temperature knob to the right to increase the temperature or to the left to reduce it. Alternatively press key 6 of the programmer to increase the temperature or key 5 to reduce it.
3. **START THE COOKING**
   Press key 3 of the programmer to start the cooking.
   IMPORTANT: The cooking does not start if the key 3 is not pressed.
4. **CHANGING THE SET TEMPERATURE DURING COOKING**
   The temperature can be changed by using the temperature knob.
   Alternatively it can be changed by using the programmer: press key 4 and then key 6 to increase the temperature or key 5 to reduce it.
   During the regulation the temperature is flashing.
   The minimum temperature which can be set is 120°F (50°C) while the maximum temperature is: 520°F (270°C) for the broiling and ventilated broiling; 535°F (280°C) for the other cooking functions.

SWITCHING OFF
Turn the selector knob to position OFF (oven OFF). The programmer display shows the time.

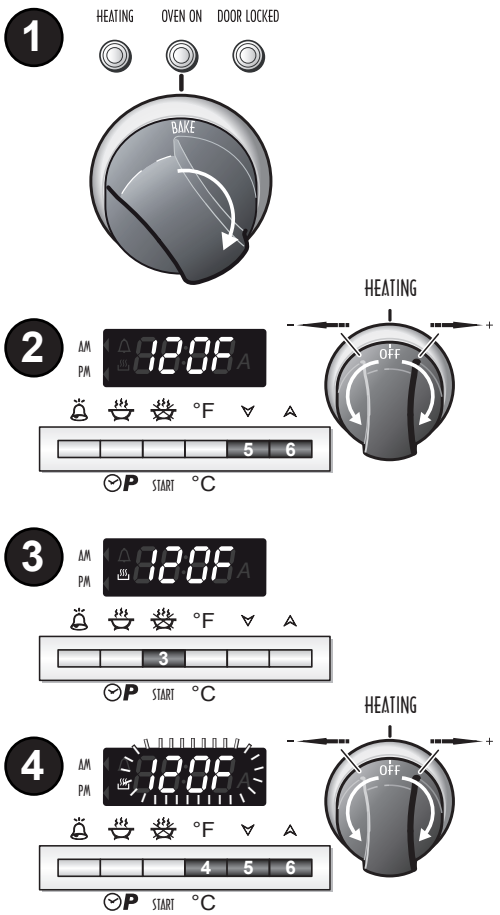

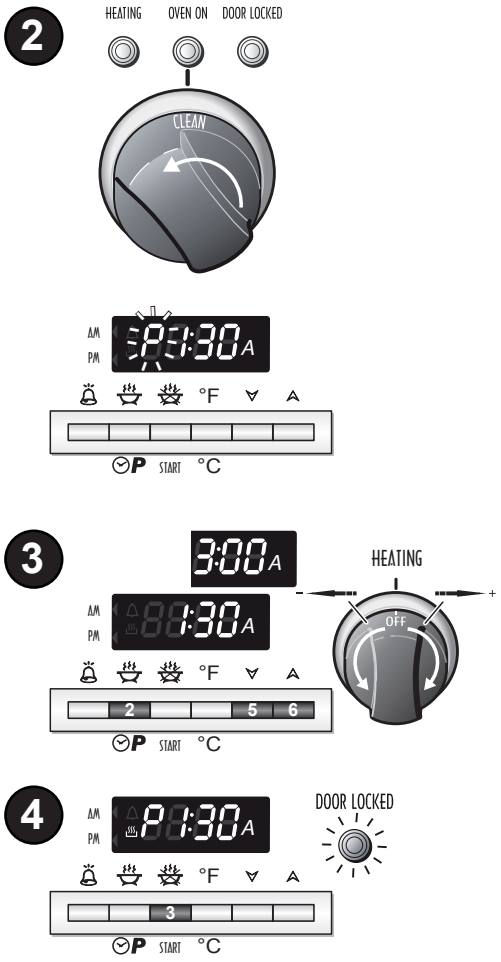

HOW TO START THE SELF CLEANING CYCLE

Important: The self cleaning cycle must only be performed with the oven empty; so, before starting the cycle take all the accessories (shelves, drip tray, ...) out of the oven cavity and dry any traces of overflowed liquid.
Do not use any decreasing products (e.g. decreasing sprays, detergents, etc.).

1. Close the oven door (if it is open or not closed properly, "**door**" flashing on the display, the self cleaning cycle will not start).
2. Turn the oven selector knob to the self cleaning position CLEAN; "**P1:30**" (self cleaning time, 1 hour and 30 minutes) appears on the electronic programmer display with the letter "**P**" flashing.
3. To increase the self cleaning cycle time (max 3 hours) press key 2 of the programmer then key 6. To go backwards to the minimum of 1 hour and 30 minutes press key 2 then key 5. Alternatively press key 2 of the programmer and then turn the temperature knob to the right to increase the time or to the left to reduce it. During the setting "**P**" is not shown on the display.
4. Press button 3 on the programmer to start the cycle.
   This combined confirmation operation offers greater safety when there are children; in fact turning the knob to the self cleaning function has no effect if key 3 of the programmer is not then pressed.
   The programmer display reads **PH:MM** (H:MM=self cleaning time where H=hours and MM=minutes) and the door is locked after some seconds.
   On the control panel the door locked pilot light lights up to indicate that the door is locked.

The self cleaning cycle starts immediately (the symbol lights up) and is completed in the programmed time.Throughout the self cleaning cycle the programmer displays the time (hours and minutes) remaining until the cycle is finished.

VERY IMPORTANT:
The self cleaning cycle only starts with the oven door closed. If the door is open or not closed properly ("door" flashing on the display) the oven CANNOT perform the self cleaning cycle; electronic safety devices prevent the self cleaning cycle from starting.

PROBLEMS ON STARTING AND DURING THE SELF CLEANING CYCLE

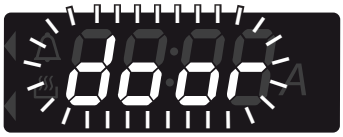

1. **“door” (flashing) appears on the programmer display**
   The function selector has been turned to the self cleaning position with the oven door open or not perfectly closed. Or the door has been opened before the cycle has been started with confirmation from key 3.

What to do:
- Close the door and repeat the operations to start the cycle.

2. **“F0E0” and “A” appear on the programmer display**
   The self cleaning cycle has been stopped and then re-started (immediately). The message is displayed after about 15 minutes and the self cleaning cycle is zeroed.

What to do:
- Turn the oven selector knob to OFF (oven off).
- Wait for at least 30 minutes.
- Repeat the operations to start the self cleaning cycle.
- If after several attempts the message continues contact the Service Centre.

Caution: It is advisable not to stop the self cleaning cycle and then start it again when it is quite a way through.

3. **“Fdor” appears on the programmer display**
   Malfunctioning of door lock system.

What to do:
- Turn the function selector to OFF (oven OFF).
- Wait for the oven to cool down completely and disconnect the range from the mains.
- Reconnect the appliance to the main.

If after this procedure the display still reads “**Fdor**”:
- Disconnect the range from the mains.
- Call Service. The range must not be used.

HOW TO STOP THE SELF CLEANING CYCLE

1. Turn the function selector to OFF (oven OFF).

   If the oven cavity temperature is higher than 570°F (300°C):
   - "**Hot**" appears on the programmer display.
   - When the oven cavity temperature drops below 570°F (300°C):
     – the door locked pilot light goes out;
     – the door unlocks and can be opened;
     – the time of day appears on the programmer display.

   If the oven cavity temperature is lower than 570°F (300°C):
   - The time of day appears on the programmer display.
   - After a technical time:
     – the door locked pilot light goes out;
     – the door unlocks and can be opened.

IMPORTANT: Wait for the oven to cool down completely before starting a cooking function.

2. **ACCIDENTAL INTERRUPTION OF THE SELF CLEANING CYCLE.**
   The function selector has been turned to any cooking function.

   If the oven cavity temperature is higher than 570°F (300°C):
   - "**Hot**" appears on the programmer display.
   - When the oven cavity temperature drops below 570°F (300°C):
     – the door locked pilot light goes out;
     – the door unlocks and can be opened;
     – pre-set temperature of the selected function flashes on the programmer display.
   - To reset normal conditions turn the function selector to OFF (oven OFF).

   If the oven cavity temperature is lower than 570°F (300°C)
   - Pre-set temperature of the selected function flashes on the programmer display.
   - After a technical time:
     – the door locked pilot light goes out;
     – the door unlocks and can be opened.
   - To reset normal conditions turn the function selector to OFF (oven OFF).
     The time appears on the programmer display.

IMPORTANT: Wait for the oven to cool down completely before starting a cooking function.

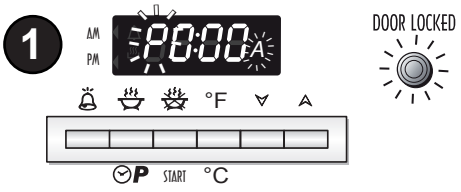

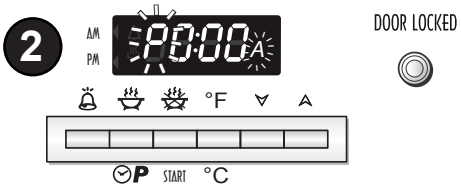

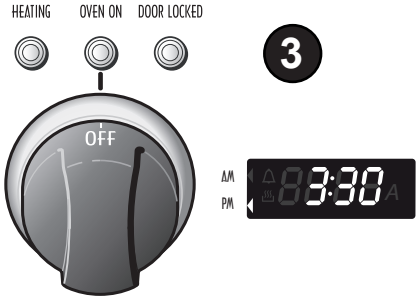

WHAT TO DO WHEN THE SELF CLEANING CYCLE HAS FINISHED

1. **"P0:00" and "A" appear on the programmer display ("P" and "A" flashing)**
   Wait for the oven to cool down and the door to unlock.
   The self cleaning cycle has finished. The door remains locked until the cavity temperature has dropped below 570°F (300°C).
2. The door locked light goes out (when the temperature has dropped below 570°F - 300°C). The door is unlocked and can be opened.
3. Turn the function selector knob to OFF (oven OFF).
   The time appears on the programmer display.
4. Wait for the oven to cool down completely.
5. Remove the pulverised dirt.
   Open the oven door and remove the residue of pulverised dirt inside the oven with a damp cloth.

IMPORTANT: Let the appliance cool down completely before switching the oven on again.

ABNORMAL SITUATIONS AND/OR OPERATION PROBLEMS during cooking or the self cleaning cycle

1. **“F000” or “F001” appear during cooking or self cleaning cycle**
   Oven temperature sensor is broken or not working properly. The cooling fan stays on and if the self cleaning cycle is in progress the door remains locked.

What to do:
- Turn the function selector to OFF (oven OFF).
- Wait for the oven to cool down completely and disconnect the range from the mains.
- Reconnect the appliance to the main.

If after this procedure the display still reads “**F000**” or “**F001**”:
- Disconnect the range from the mains.
- Call Service. The range must not be used.

1

2

2. **“F0E0” and “A” appear during the self cleaning cycle**
   This indicates a temperature sensor measurement error during the self cleaning cycle. This may be due to the self cleaning cycle being stopped and started again when it was quite a way through.

What to do:
- Turn the oven selector knob to OFF (oven OFF).
- Wait for at least 30 minutes before repeating the operations to start the self cleaning cycle.
- If the message is still given after several attempts call Service.

3

3. **“FPot”, “Fdor”, “FAdc” or “FrEL” appear during cooking or self cleaning cycle**
   This indicates an error or malfunctioning.

What to do:
- Turn the function selector to OFF (oven OFF).
- Wait for the oven to cool down completely and disconnect the range from the mains.
- Reconnect the appliance to the main.

If after this procedure the display still reads **“FPot”, “Fdor”, “FAdc” or “FrEL”**:
- Disconnect the range from the mains.
- Call Service. The range must not be used.

4. **Display OFF**
   Oven not working properly.

What to do:
- Turn the function selector to OFF (oven OFF).
- Wait for the oven to cool down completely so that the door opens.
- Switch the range off for a few seconds.

If after this procedure the display is still off:
- Disconnect the range from the mains.
- Call Service. The range must not be used.

4

⚠ WARNING!!

It is advisable to handle the oven accessories using oven gloves.

COOKING ADVICE

STERILIZATION

Sterilization of foods to be conserved, in full and hermetically sealed jars, is done in the following way:

a. Turn the switch to position CONV.BAKE (convection cooking with ventilation).
b. Set the thermostat knob to position 350°F (175°C) and preheat the oven.
c. Fill the grill pan with hot water.
d. Set the jars into the grill pan making sure they do not touch each other and the door and set the thermostat knob to position 260°F (130°C).

When sterilization has begun, that is, when the contents of the jars start to bubble, turn off the oven and let cool.

ROASTING

To obtain classical roasting, it is necessary to remember:

- the pre-set temperature should be maintained;
- that the cooking time depends on the quantity and the type of foods.

COOKING DIFFERENT DISHES AT THE SAME TIME

The MULTIFUNCTION oven at positions CONV.BAKE (convection cooking with ventilation) of the function selector can cook various different foods at the same time. Fish, cakes and meat can be cooked together without the smells and flavours mixing. The only precautions required are the following:

- The cooking temperatures must be as close as possible with a maximum difference of 70-80°F (20-25°C) between the different foods.
- Different dishes must be placed in the oven at different times according to the cooking time required for each one. This type of cooking obviously provides a considerable saving on time and energy.

VENTILATED BROILING

Broiling may be done by selecting CONV.BROIL (Ventilated Broiling) with the function selector knob, because the hot air completely envelops the food that is to be cooked. Set the temperature if a temperature different from the pre-set one is required.
Introduce the food to be cooked, positioning the broiling pan as close to the infra-red element as possible.
Close the door and let the oven operate until broiling is done.

Broiling with the oven door closed.

Important: Always use suitable protective gloves when inserting/removing the broiling pan from the oven (see next page).

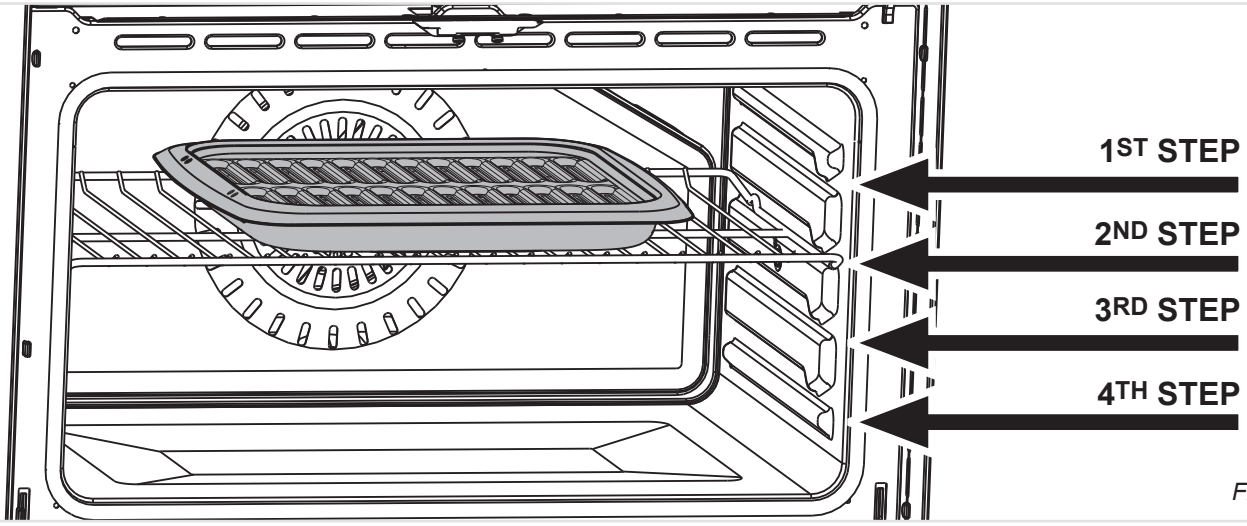

Fig. 4.3

BROILING

Very important: the broil element must always be used with the oven door closed.

- Position the shelf on the first or second level from the top (fig. 4.3).
- Turn on the broil element, as explained in the preceding paragraphs and let the oven preheat for about 5 minutes with the door closed.
- Place the food to be cooked above the broiler tray.
- Introduce the broiler tray (fig. 4.4) in the oven. The broiler tray should be placed above the shelf and it should be centered with the broil element (fig. 4.3).

Do not broil without using the broiling pan.
Important: Always use suitable protective gloves when inserting/removing the broiling pan, shelves, pans on other cooking utensils from the oven.

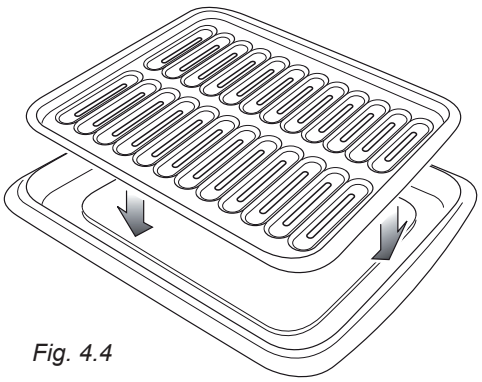

Fig. 4.4

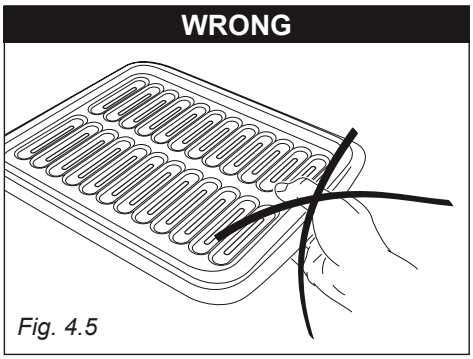

Fig. 4.5

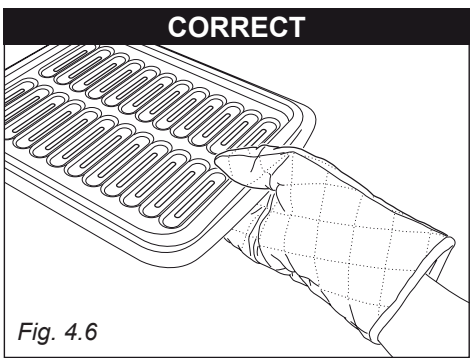

Fig. 4.6

The electronic programmer is a device which groups together the following functions:

- 12 hours clock with illuminated display.
- Timer (up to 3 hours).
- Program for semi-automatic oven cooking.
- Program for automatic oven cooking.
- Management of the cooking functions. The programmer can manage setting the temperature in the various cooking functions.
- Management of the self cleaning function.

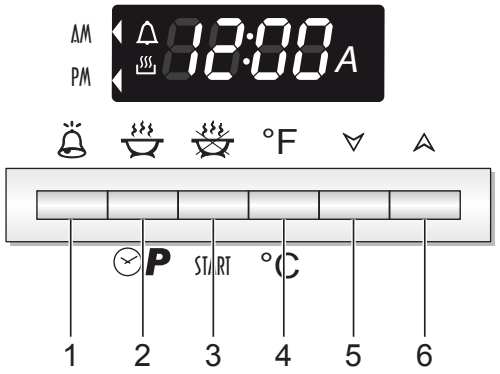

Fig. 5.1

Description of the buttons:

	Timer (1)
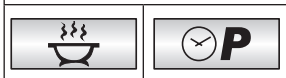	Cooking time or self cleaning time (2)
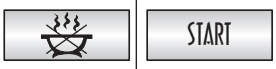	End of cooking time or allowance to start the cooking functions or self cleaning cycle (3)
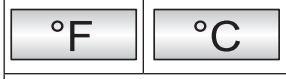	Setting oven temperature (4)
	Countdown of the figures of all the functions or of the temperature to be set (5)
	Advance of the figures of all the functions or of the temperature to be set (6)

Description of the light symbols:

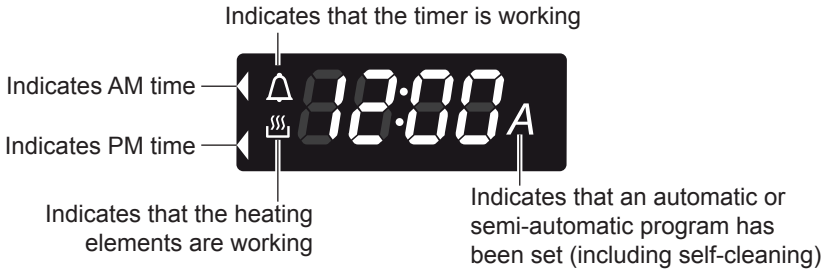

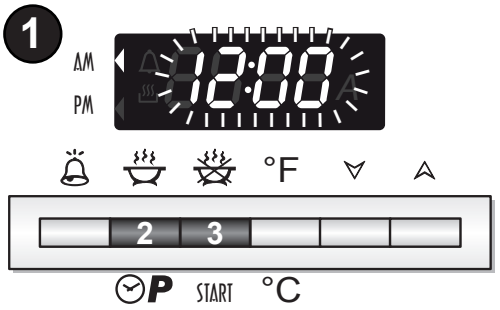

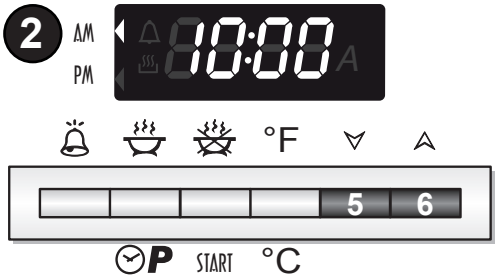

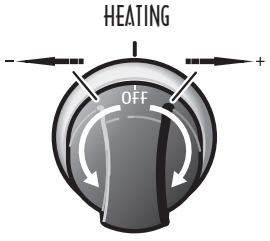

SWITCHING ON FOR THE FIRST TIME OR AFTER A BLACK-OUT

After the appliance has been connected to the mains or after there has been a blackout the programmer must be activated so that it can work.

"**12:00**" flashes on the display.

1. Press keys 2 and 3 at the same time. The programmer starts to work.

SETTING THE TIME

The programmer has an electronic clock (12 hours) with luminous figures which indicate hours and minutes.

Note: It is not possible to set the time during a manual or automatic/semi-automatic cooking.

1. Press buttons 2 and 3 at the same time; the time will flash on the display
2. Press buttons 5 or 6 until the exact time is set (or turn the temperature knob to the right to increase the time and to the left to reduce it). If the plus or minus keys are kept pressed for a few seconds, the figures will scroll more quickly.

AUDIBLE SIGNAL

The intermittent audible signal sounds when the timer or semi-automatic or automatic cooking have reached the end of the time set.
To silence the audible signal press any of the programmer keys.

TIMER

The timer function is only used to count the time and does not influence oven operation or any programmes which are in progress or set.

1. Press button 1 - "**0:00**" appears on the programmer display.
2. Press keys 5 or 6 to set the time required (or turn the temperature knob to the right to increase the time and to the left to reduce it) - the bell symbol lights up on the display.
3. The countdown starts immediately and the time appears again.
4. To see the countdown press button 1. The time will be indicated in hours and minutes; the seconds are only indicated for the last minute.
5. At the end of the countdown an audible signal sounds and the bell symbol goes out. Press any button to stop the audible signal.

IMPORTANT WARNING: This function is only an electronic alarm and does not switch OFF the oven. Remember to turn to OFF (oven OFF) manually the selector knob at the end of the countdown.

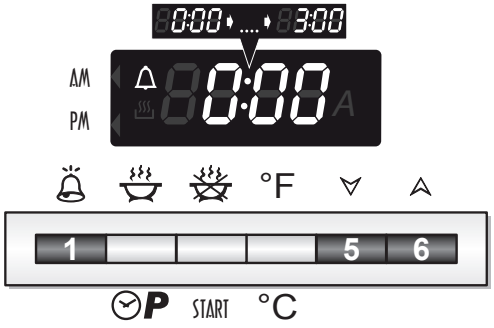

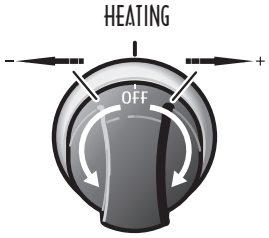

AUTOMATIC COOKING - Start cooking at the programmed time and switch the oven off automatically after the programmed cooking time

OR SEMI-AUTOMATIC COOKING - Start immediate cooking and switch the oven off automatically after the programmed cooking time

Setting

1. Set the cooking function by turning the oven selector to the function required.
2. The pre-set cooking temperature appears on the display. To change it proceed as described in the "SETTING THE COOKING" chapter.
3. Press key 3 of the programmer to confirm the cooking function.
4. Press button 2: "**0:00**" appears on the electronic programmer display.
   Press buttons 5 or 6 to set the cooking time or turn the temperature knob to the right to increase the time and to the left to reduce it (cooking time in hours and minutes: set it to ten minutes less than the time required because the stored heat will complete the cooking). "**A**" appears on the display.
5. Press button 3; then press buttons 5 or 6 to set the time when the cooking should finish or turn the temperature knob to the right to increase the time and to the left to reduce it.
6. The display reads the set temperature.

Semi-automatic cooking: If you are already at home to turn the oven on and only want the oven to turn off automatically, start cooking as normal, then follow step 4 or step 5 to set the cooking time or a time to stop the oven.

Starting cooking

7. The cooking symbol lights up. The oven switches on and the cooking cycle set starts.

During cooking

8. During the cooking cycle, the display shows the oven temperature measured by the probe or pre-set temperature. Press key 2 to display the length of cooking set. Press key 3 to display the stop time set. The cooking time, end of cooking time and cooking temperature can be varied at any time, as described above.

At the end of cooking

9. "**End**" appears on the display, "**A**" flashes and the audible signal sounds. The cooking cycle has finished and the oven is OFF. Press any programmer button to stop the audible signal.
10. Turn the function selector to OFF (oven OFF). The programmer display shows the time.

Note: At the end of the program always turn the function selector knob to OFF (oven OFF).

IMPORTANT: During AUTOMATIC COOKING PROGRAM the oven light is always on, also before starting (heating elements on or cycling) of the programmed cooking.

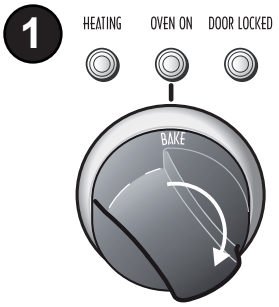

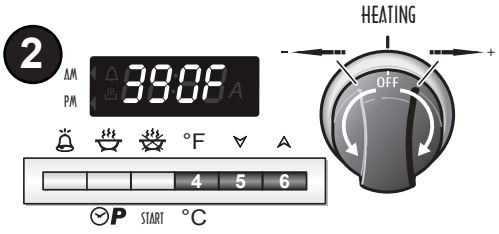

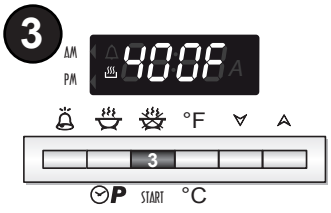

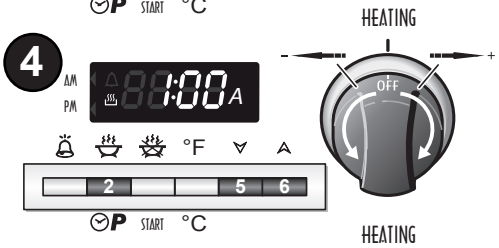

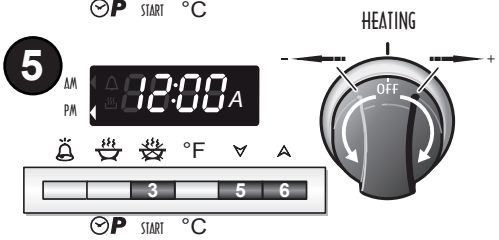

CANCELLING A SET PROGRAM

To cancel any program just press the buttons 5 and 6 at the same time for more than 3 seconds or turn the function selector knob to OFF (oven OFF).

Note: If during a set program the function selector knob is turned to CLEAN (self cleaning), LIGHT(oven lighting), DEFROST (defrosting frozen foods) or to another cooking function, the program is cancelled.

EXAMPLE OF PROGRAMMING AUTOMATIC COOKING

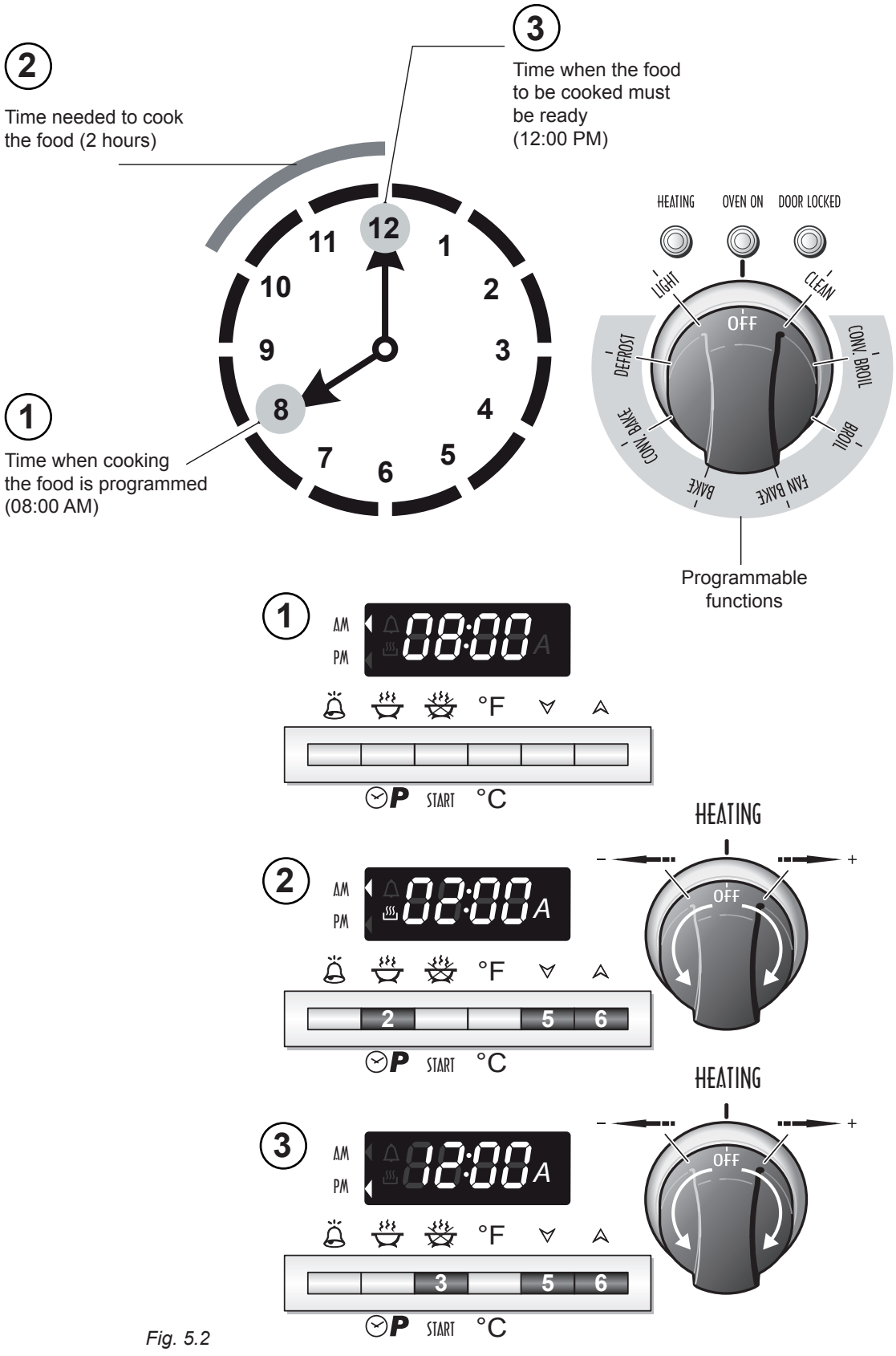

Fig. 5.2

WARNING
VERY IMPORTANT

Before any operation of maintenance disconnect the appliance from the electrical main supply.

Do not use steam jet cleaners because the humidity could infiltrate into the appliance making it dangerous.

Do not use harsh abrasive cleaners or sharp metal scrapers to clean the oven door glass since they can scratch the surface, which may result in shattering of the glass.

WARNING !!

Do not store flammable material in the oven or in the warming drawer.

GENERAL RECOMANDATION

- **Important: Before any operation of cleaning and maintenance disconnect the appliance from the electrical supply.**
- It is advisable to clean when the appliance is cold and especially for cleaning the enamelled parts.
- Avoid leaving alkaline or acidic substances (lemon juice, vinegar, etc.) on the surfaces.
- Avoid using cleaning products with a chlorine or acidic base.
- **IMPORTANT: The use of suitable protective clothing/gloves is recommended when cleaning and maintaining the appliance.**
- **WARNING**
  When correctly installed, your product meets all safety requirements laid down for this type of product category. However special care should be taken around the rear or the underneath of the appliance as these areas are not designed or intended to be touched and may contain sharp or rough edges, that may cause injury.

ENAMELLED PARTS

- All the enamelled parts must be cleaned with a sponge and soapy water only or other non-abrasive products.
- Dry preferably with a microfibre or soft cloth.
- Acidic substances like lemon juice, tomato sauce, vinegar etc. can damage the enamel if left too long.

PAINTED PARTS AND SILK-SCREEN PRINTED SURFACES

- Clean using an appropriate product. Always dry thoroughly.

IMPORTANT: these parts must be cleaned very carefully to avoid scratching and abrasion. You are advised to use a soft cloth and neutral soap.

STAINLESS STEEL ELEMENTS

- Stainless steel parts must be rinsed with water and dried with a soft and clean cloth.
- For difficult dirt, use a specific non-abrasive product available commercially or a little hot vinegar.

INSIDE OF OVEN

The oven should always be cleaned after use when it has cooled down.
The cavity should be cleaned using a mild detergent solution and warm water.
Suitable proprietary chemical cleaners may be used after first consulting with the manufacturers recommendations and testing a small sample of the oven cavity.
Abrasive cleaning agents or scouring pads/cloths should not be used on the cavity surface.

NOTE: The manufacturers of this appliance will accept no responsibility for damage caused by chemical or abrasive cleaning.

Let the oven cool down and pay special attention no to touch the hot heating elements inside the oven cavity.

VITROCERAMIC SURFACE

Before cleaning the top, make sure that it is switched off.

Remove any encrustation using a special scraper which can be bought (fig. 6.1).
Remove dust using a damp cloth.
Detergents can be used as long as they are not abrasive or corrosive.
All residues of detergent must be eliminated with a damp cloth.

Keep all objects that could be melted by the heat away from the top: plastic objects, aluminium foil, sugar or sugary products.
If an object melts on the top, remove immediately (while the top is still hot) using a special scraper to avoid permanent damage to the pyroceram surface.
Avoid using knives and pointed objects as they could damage the surface of the top.
Also avoid using abrasive sponges or wire wool which can permanently scratch the pyroceram surface.

ATTENTION: MOST IMPORTANT!
If cleaning the glass ceramic hob using a special scraper tool take extra care to avoid damaging to the seal at the edges of the glass ceramic surface.

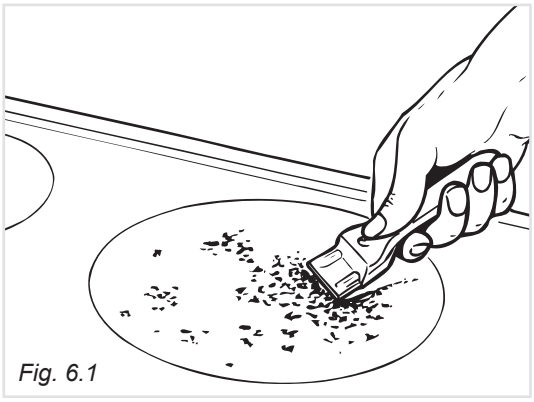

Fig. 6.1

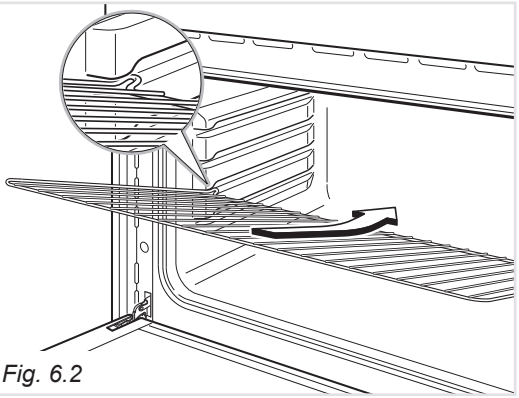

Fig. 6.2

OVEN SHELF INSTALLATION AND REMOVAL

The oven shelf is provided with a security block to prevent accidental extraction.
It must be inserted as per figure 6.2.
To pull it out remove shelf in the inverse order.

Keep attention to insert the shelf correctly (see figure 6.2).

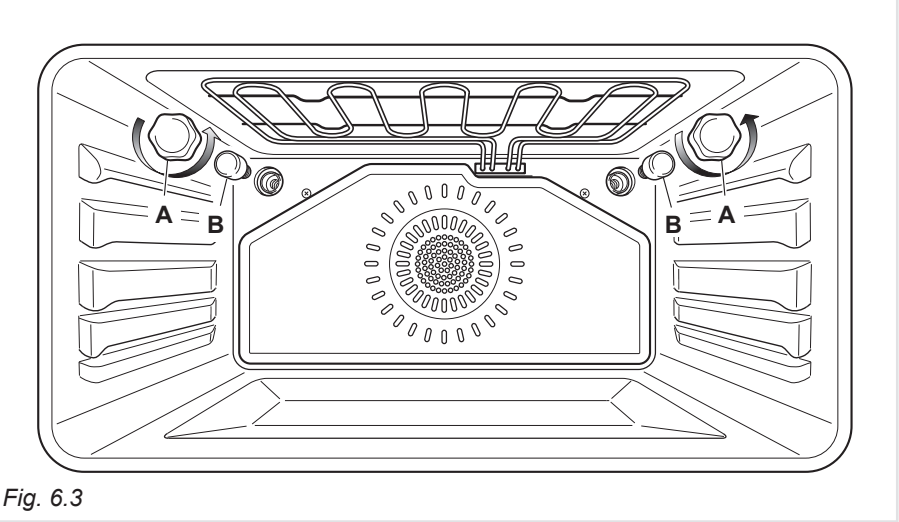

Fig. 6.3

REPLACING THE OVEN LIGHT (fig. 6.3)

Before any maintenance is started involving electrical parts of the appliance, it must be disconnected from the power supply.

- Let the oven cavity and the heating elements cool down.
- Switch off the electrical supply.
- Remove the protective cover "**A**" (fig. 6.3).
- Unscrew and replace the bulb "**B**" with a new one suitable for high temperatures (300°C) having the following specifications: 120V, 60 Hz, E14 and same power (check watt power as stamped in the bulb itself) of the replaced bulb.
- Refit the protective cover.

NOTE: Oven bulb replacement is not covered by your warranty.

WARNING:
- **Do not remove drawer while hot.**
- **Do not remove drawer during**
- **operation.**
- **Be sure drawer is empty before removing.**

REMOVING THE WARMING DRAWER

1. Open the drawer completely (fig. 6.4)
2. Move down the lever of left guide (fig. 6.5) and up the lever of right guide (fig. 6.6).
3. Remove the drawer; the levers have to be keep moved (fig. 6.4).

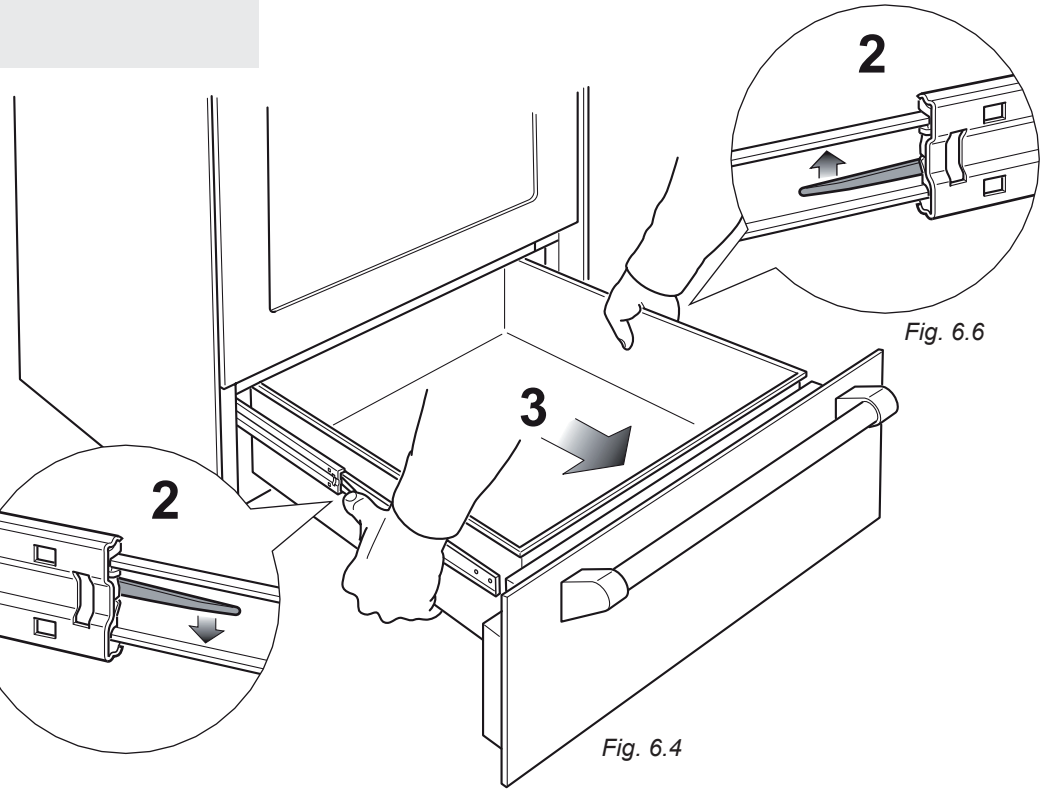

Fig. 6.6

Fig. 6.5

Fig. 6.4

FITTING THE WARMING DRAWER

1. Insert the drawer guides into the range guides (fig. 6.7)
2. Gently close the drawer completely; the safety catchs will be automatically hooked.

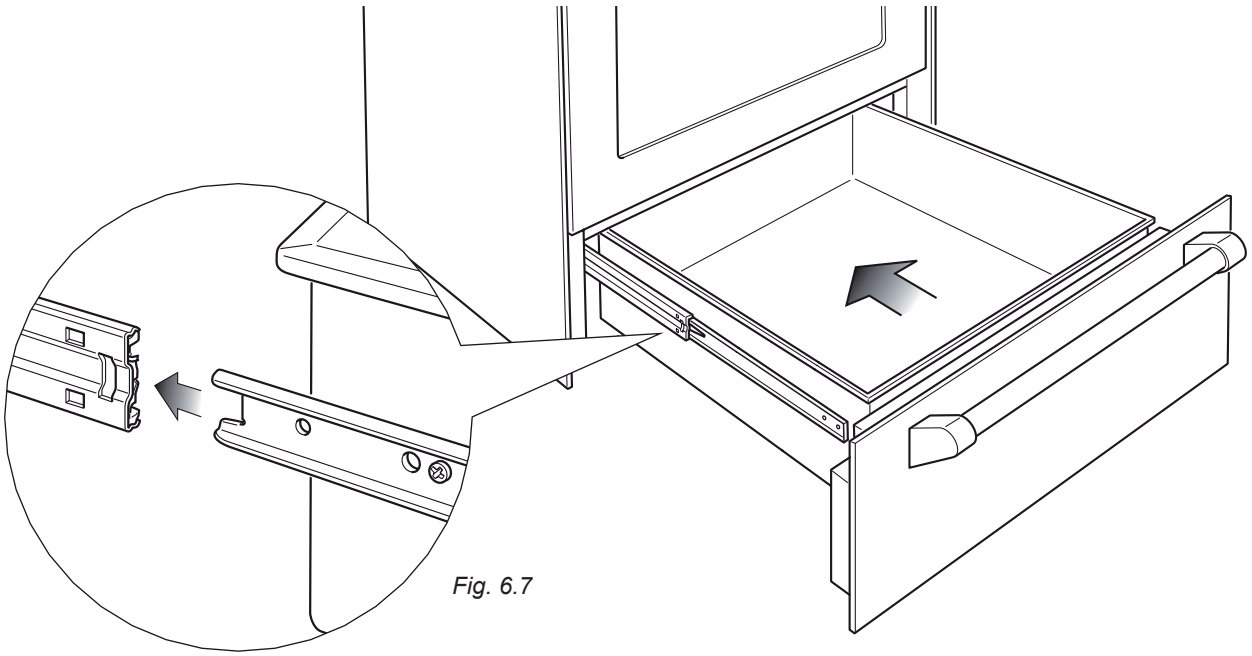

Fig. 6.7

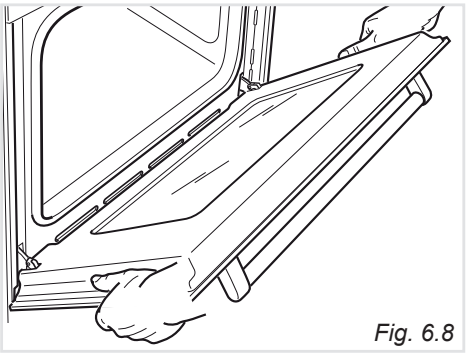

Fig. 6.8

REMOVING THE OVEN DOOR

The oven door can easily be removed as follows:

- Open the door to the full extent (fig. 6.8a).
- Open the lever "**A**" completely on the left and right hinges (fig. 6.8b).
- Hold the door as shown in fig. 6.8.
- Gently close the door (fig. 6.8c) until left and right hinge levers "**A**" are hooked to part "**B**" of the door (fig. 6.8b)
- Withdraw the hinge hooks from their location following arrow "**C**" (fig. 6.8d).
- Rest the door on a soft surface.
- To replace the door, repeat the above steps in reverse order.

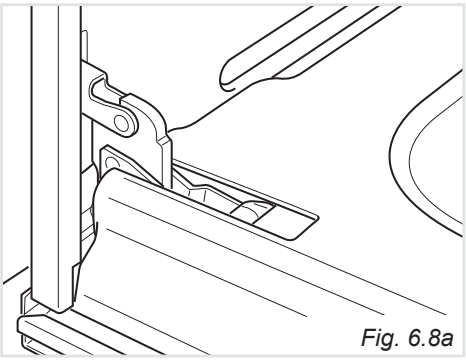

Fig. 6.8a

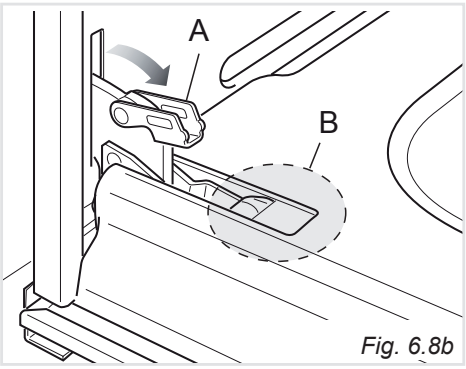

Fig. 6.8b

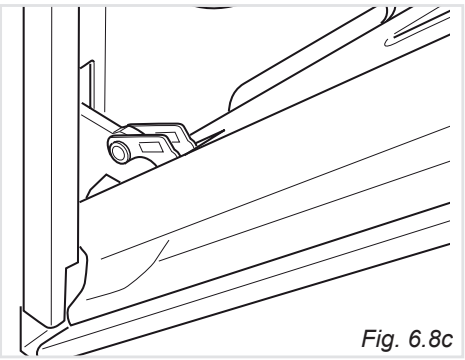

Fig. 6.8c

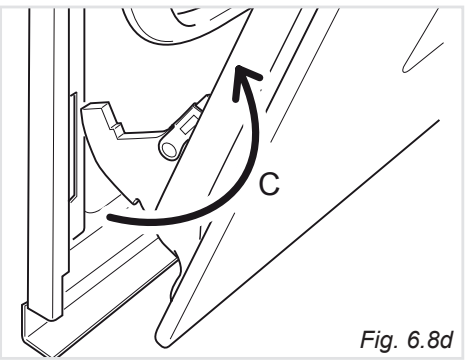

Fig. 6.8d

Important!

Always keep a safe distance from the door hinges, paying special attention to position of your hands.

If the door hinges are not correctly hooked, they could unhook and close suddenly and unexpectedly with risk of injury.

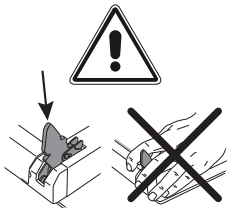

6

DO'S AND DO NOT'S

- Do always use the oven with the door closed.
- Do always broil with the door closed.
- Do read the user instructions carefully before using the range for first time.
- Do allow the oven to heat for about two hours, before using for the first time, in order to expel any smell from the new oven insulation, without the introduction of food.
- Do clean your oven regularly.
- Do remove spills as soon as they occur.
- Do always use oven gloves when removing food shelves and trays from the oven and from the warming drawer.
- Do not allow children near the range when in use.
- Do not allow fat or oils to build up in the oven base, or oven accessories.
- Do not place cooking utensils or plates directly onto the oven base.
- Do not place hot enamel parts in water. Leave them to cool first.
- Do not allow vinegar, coffee, milk, saltwater, lemon or tomato juice to remain in contact with enamel parts (i.e. inside the oven).
- Do not use abrasive cleaners or powders that will scratch the surface of the stainless steel and the enamel.
- Do not attempt to repair the internal workings of your range.
- Do remove the protective film before the first use.
- Fire risk! Do not store flammable material in the oven and in the warming drawer.
- Do not place food in unopened containers in the warming drawer.
- Do not touch the interior surface of the warming drawer while it is in use.
- Do not use aluminum foil to line the warming drawer.
- Do not use plastic containers in the warming drawer.
- Do not use the warming drawer as a storage drawer.
- Do not use the oven with the oven door open.
- Do not use the warming drawer to warming plates.
- Do not use the oven and the warming drawer to warm or heat a room.
- Do not use the range when the oven is operating in self cleaning mode.
- When the self cleaning mode has been completed do not start immediately a new self cleaning cycle: let the range to cool down.
- Do not use the vitroceramic hob if the surface is broken or damaged. If you note a crack in the cooktop, switch the appliance off immediately and call the After-Sales Service.
- Do not leave aluminium foil, greaseproof paper etc. or plastic on the hob when it is hot.
- Do not drop heavy or sharp objects on the glass ceramic cooktop.

FOR YOUR SAFETY

Under no circumstances should any external covers be removed for servicing or maintenance except by suitably qualified personnel.

The manufacturer cannot be held responsible for possible inaccuracies due to printing or transcription errors in the present booklet.
The manufacturer reserves the right to make all modifications to its products deemed necessary for manufacture or commercial reasons at any moment and without prior notice, without jeopardising the essential functional and safety characteristics of the appliances.