Luxury

Perlick®

Operation & Installation Manual

Signature Series (HP15-, HP24- and HP48-inch models)

Beer Dispenser Models Only

HP15TS
HP24TS
HP48RT

Form No. Z2259
Rev. 06/07/2012

Table of Contents

Introduction 3
Warranty Registration 3
General Precautions 4
Installation Specifications 4
Overall Dimensions and Drawings 5
Preparing the Space 8
Preparing the Electrical Connections 8
Unpacking and Moving 8
Anti-tip Brackets 9
Installation 10
Shelving 11
Toe Plate Wood Overlay Drawings 12
Shelf and Drawer Removal 14
Door Options and Wood Overlay Installation 15
Operation 24
General 24
Temperature Controller 25
Unit Temperatures/Product Temperature 26
Cleaning and Maintenance 26
Installing Tapping Equipment 27
Mounting Hole Template for Draft Arms 30
CO2 Connections 31
Tapping a Keg 32
Cleaning the Beer System 33
Pouring the Perfect Glass of Beer 34
Troubleshooting 35
Warranty 37

INTRODUCTION

Congratulations on your purchase of a Perlick residential refrigeration product. Perlick has taken its expertise and experience into creating the highest quality and most innovative residential products on the market. Perlick's product offering gives you the opportunity to enjoy the functionality and user friendliness in just about any room of your home, including kitchens, bedrooms, entertainment rooms, basements and even bathrooms. All Perlick products are built with commercial-grade stainless steel – providing you with the beauty and durability for a lifetime of use.

This Installation and Operation Manual will answer your questions about the features, operation and maintenance of your Refrigerated Cabinet model. If you have questions that are not addressed here, call 800 558-5592.

IMPORTANT : PLEASE READ all instructions completely before attempting to install or operate the unit. First, as you follow these Installation and Operation instructions, take particular note of the DANGER!, CAUTION! and WARNING! symbols when they appear. This information is important for the safe and efficient installation, operation and care of your Perlick unit.

DANGER
Indicates a hazard that will result in serious injury or death if precautions are not followed.

WARNING
Indicates a hazard may cause serious injury or death if precautions are not followed.

CAUTION
Indicates a hazard where minor injury or product damage may occur if you do not follow instructions.

Once the unit is completely installed, we suggest you keep this manual and purchasing documentation in a safe place for future reference. Should problems occur: refer to the troubleshooting section of this manual. The information will help you quickly identify a problem and get it remedied. In the event you require assistance, please contact the dealer where you purchased your unit.

WARRANTY REGISTRATION CARD

To request information or service, the model number and serial number must be provided. This information is located on the inside ceiling of the unit and on the warranty registration card included with information packet shipped with the unit.

IMPORTANT : Read through the included warranty statement then complete and mail the Warranty Registration Card as soon as possible to validate the registration date. Warranty registration can also be done online at www.perlick.com. If warranty registration is not completed, Perlick will use the date of sale as the first date of warranty for the unit. Please record the purchase date of the unit and the dealer's name, address and telephone number below.

MODEL NUMBER: _____

SERIAL NUMBER: _____

PURCHASE DATE: _____

DEALER NAME & ADDRESS:

_____

_____

_____

DEALER PHONE: _____

GENERAL PRECAUTIONS

DANGER
Risk of child entrapment, before you throw away your old refrigerator or freezer, take off the doors and leave shelves in place so that children may not easily climb inside.

DANGER
Altering, cutting of the power cord, or removal of the power cord, removal of power plug, or direct wiring can cause serious injury, fire and/or loss of property and/or life and will void the warranty.

WARNING
- Never attempt to repair or perform maintenance on the unit until the electricity has been disconnected.
- The anti-tip kit must be installed on this unit before it is used. Never use the drawers, shelves or door as steps or to support more than they were designed to support.

CAUTION
- Do not lift unit by drawer or door handles.
- Failure to clean the condenser every three (3) months can cause the unit to malfunction. This could void the warranty.
- Never install the unit behind closed doors. Be sure front louvered toe plate is free of obstruction. Obstructing the airflow can cause unit to malfunction, and may void the warranty.

CAUTION
Use only genuine Perlick replacement parts. Imitation parts can damage the unit, and may void the warranty.

INSTALLATION INSTRUCTIONS

GENERAL
- All electrical instructions assume that outlet is located 4 to 10 inches from floor.
- Floor must be level in area of installation. Leg levelers are used for fine-tune adjustment only and should not be used to compensate for floor differences exceeding 1/2-inch.
- When moving unit into position, take care to protect floor surface with cardboard, rugs, etc.
- Never attempt to move unit without the aid of at least one other person.
- Always secure door shut prior to moving the unit.

FINISHED OPENING REQUIREMENTS

15" Signature Series		
Height	Depth	Width
34-3/8" minimum, 35-1/2" maximum	24"	15"

24" Signature Series		
Height	Depth	Width
34-3/8" minimum, 35-1/2" maximum	24"	24"

48" Signature Series		
Height	Depth	Width
34-3/8" minimum, 35-1/2" maximum	24"	48"

HP15TS Model

(Figure 1)

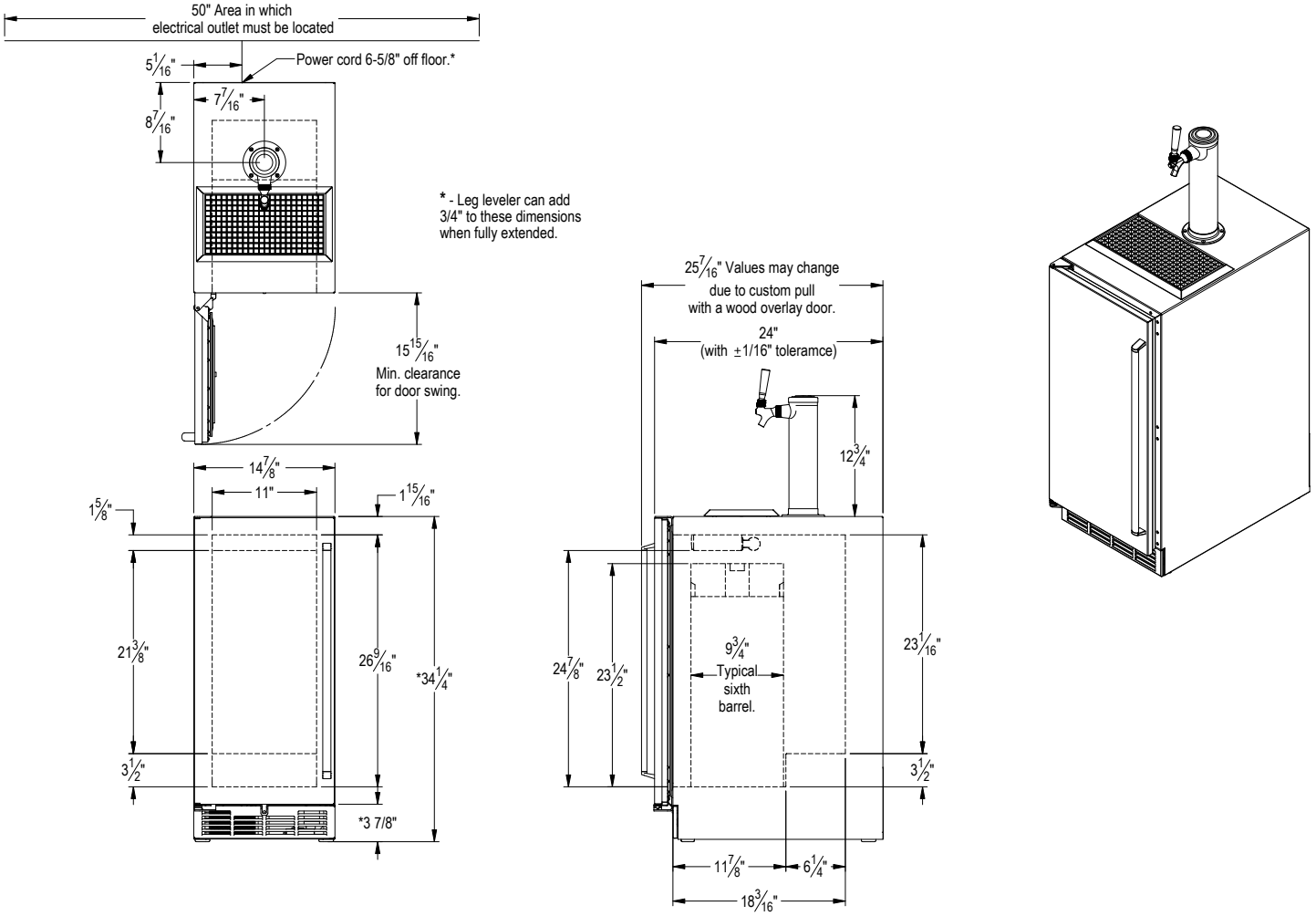

HP24TS Model

(Figure 2)

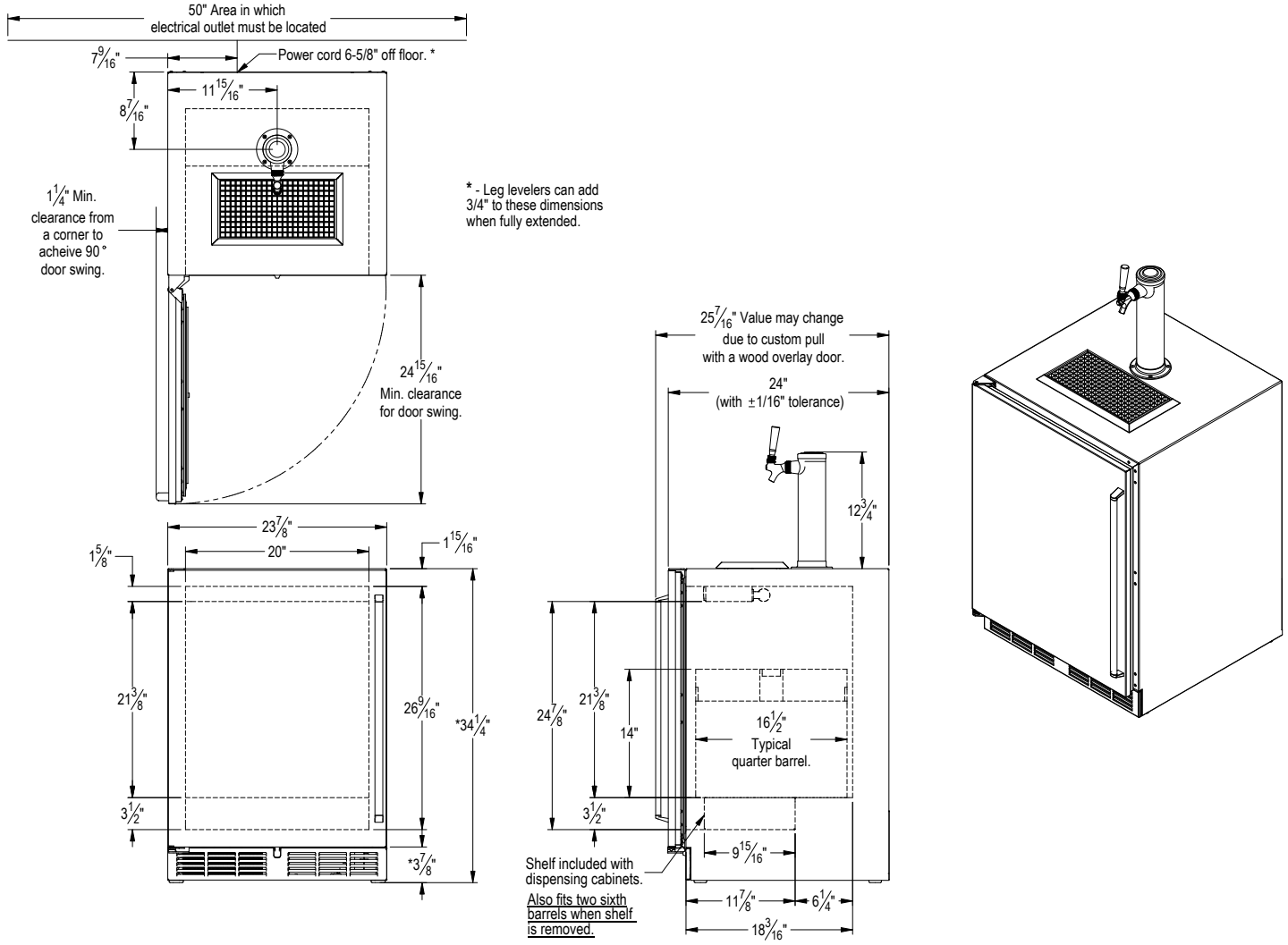

HP48RT Models

Door *(Figure 3)*/Drawer Models *(Figure 4)*

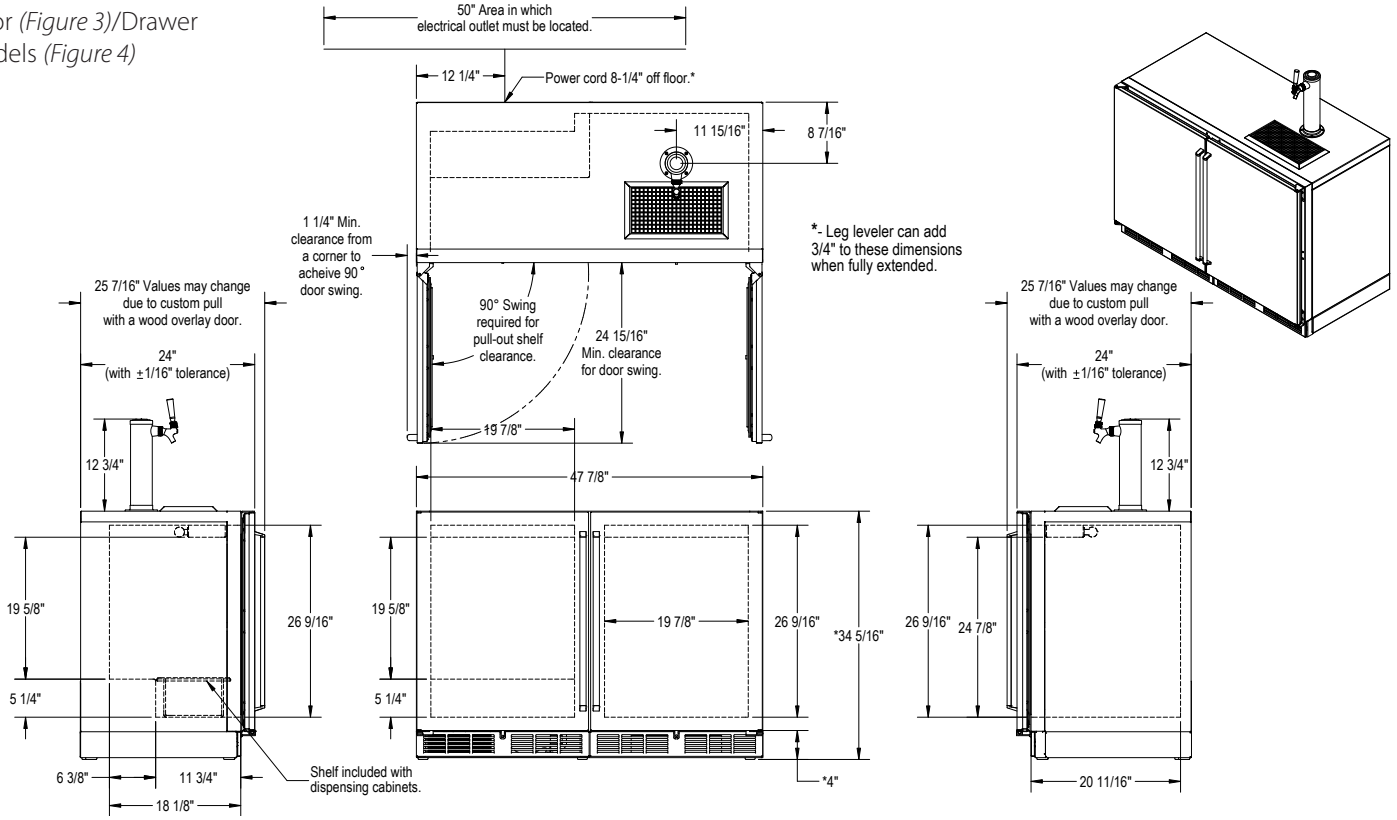

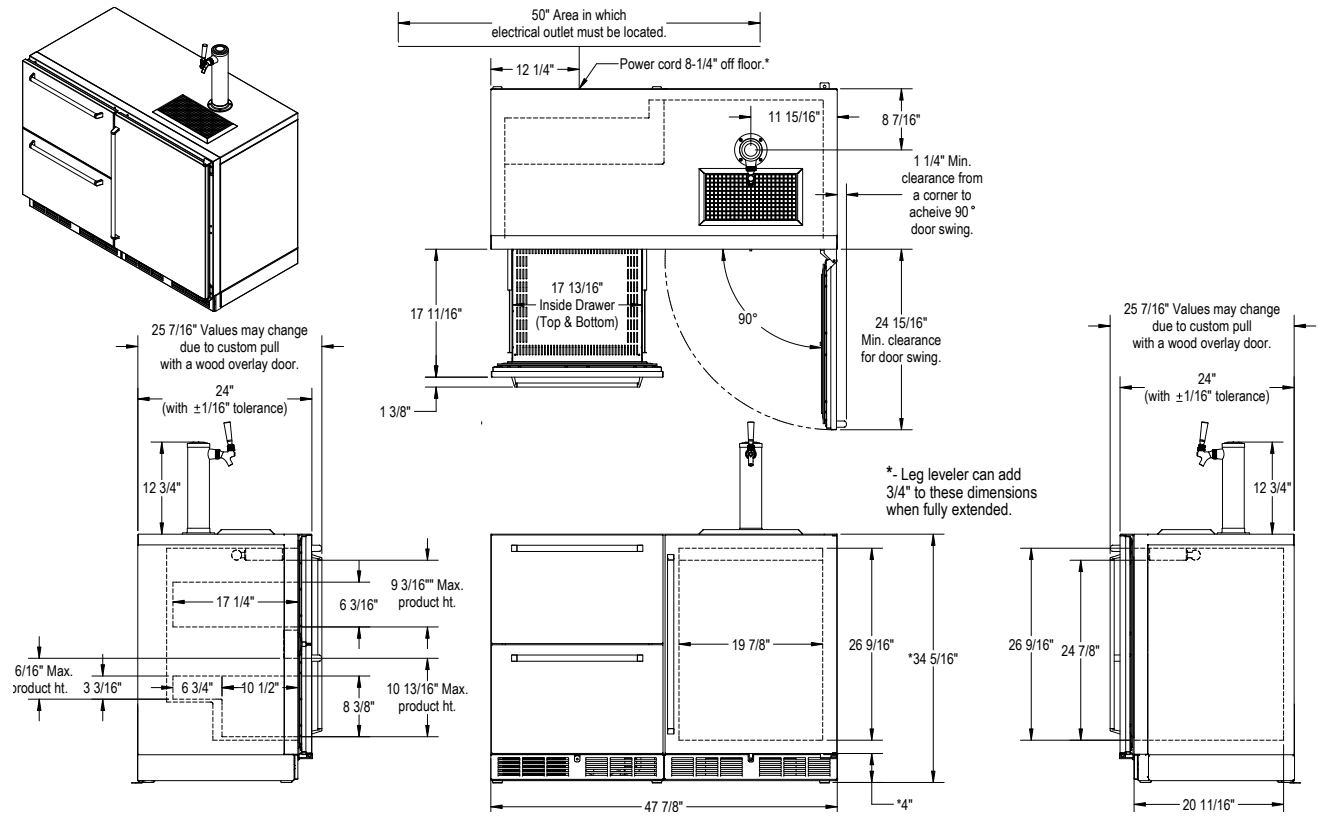

PREPARING THE SPACE

Make sure that the space that the opening where the Perlick cabinet(s) is/are to be installed is properly prepared. Refer to Figure 1 (page 5), Figure 2 (page 6) and Figure 3 (page 7) to ensure proper space dimensions and electrical service are correct for the model to be installed.

CAUTION
If cabinet is being installed under a countertop it is recommended that the countertop be supported by structure other than the refrigerated cabinet to prevent damage to the counter top.

IMPORTANT NOTE: For a cabinet door to operate properly, the door must open a minimum of 90°. Use a minimum 3-inch filler in corner installations to assure a 90° door opening. For HP15 models, allow 16" clearance in front of the unit. For HP24 and HP48 units, allow 24" clearance in front of the unit for full door swing, shelf pull-out or drawer pull-out.

IMPORTANT NOTE: Make sure the floor under the unit is level with the surrounding finished floor. Protect a finished floor with plywood, cardboard or some other suitable material before moving the unit into place. Failure to do this may result in damage to the floor.

PREPARING ELECTRICAL CONNECTIONS

A 115 volt, 60Hz, 15 amp circuit breaker and electrical supply are required. A separate circuit is required for each Perlick unit installed.

Follow the National Electrical Code and local codes and ordinances when installing the receptacle.

All Perlick units come equipped with a NEMA 5-15P 90° plug with a minimum of 5-feet of cord extending beyond the rear of the cabinet. The electrical outlet must be flush with or recessed into the back wall.

IMPORTANT NOTE: Never use an extension cord to extend the power cord to the electrical receptacle.

DANGER ⚠
ELECTROCUTION HAZARD
Electrical grounding is required. This appliance is equipped with a three prong (grounding) polarized plug for your protection against possible shock hazards.

- Never remove the round grounding prong from the plug.
- Never use a two-prong grounding adapter.
- Never use extension cords to connect power to the unit.

Where a two-prong wall receptacle is encountered or a longer power cord is required, contact a qualified electrician to have it replaced in accordance with applicable electrical cords.

DANGER ⚠
Failure to comply with the above electrical guidelines may result in possible injury, death, fire or loss of property.

UNPACKING AND MOVING

CAUTION
Do not cut cardboard sleeve covering the unit. Cutting may result in damage to the exterior of the cabinet.

1. Uncrate the unit outside on a flat surface. Remove the cardboard sleeve by removing the banding holding the sleeve to the shipping base. Carefully lift the cardboard sleeve up over the top of the unit.

2. Carefully lift unit off base and onto a hand truck or dolly (this should be done with a minimum of two people; larger units may require additional helpers!). Make sure the unit is balanced on transporting device using soft, flexible strapping. Protect unit surfaces with cloth material where strapping contacts unit.

3. Before moving unit, secure door to unit with tape to the door closed.

4. Carefully move unit to installation site and place in front of opening.

WARNING
A minimum of two people should lift the cabinet off the base to prevent possible personal injury.

ANTI-TIP BRACKETS

WARNING
Unit may tip forward if loaded racks/shelves are all pulled out at the same time. To prevent tipping and provide a stable installation, the unit must be secured in place with the anti-tip brackets provided with the unit.

A set of metal anti-tip brackets and necessary hardware is supplied with the unit. The anti-tip brackets, when properly installed, should secure the rear legs and prevent the unit from tipping forward.

Some installation sites may require modification to provide a secure surface for attaching brackets. Refer to Figures 5 and 6 (right) and Figure 7 (below) for mounting bracket locations for 15", 24" and 48" Signature Series models.

IMPORTANT NOTE: If installing on a concrete floor, concrete fasteners are required and are not included in the Anti-Tip Kit.

Figure 5 - 24" Anti-Tip Kit Drawing

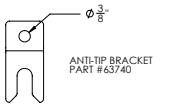

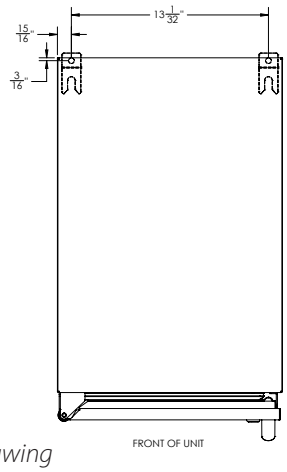

Figure 6 - 24" Anti-Tip Kit Drawing

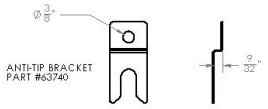

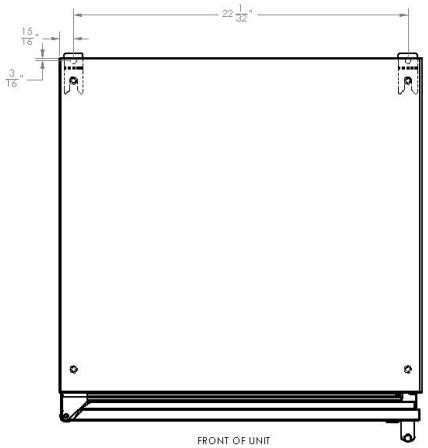

Figure 7 - 48" Anti-Tip Kit Drawing

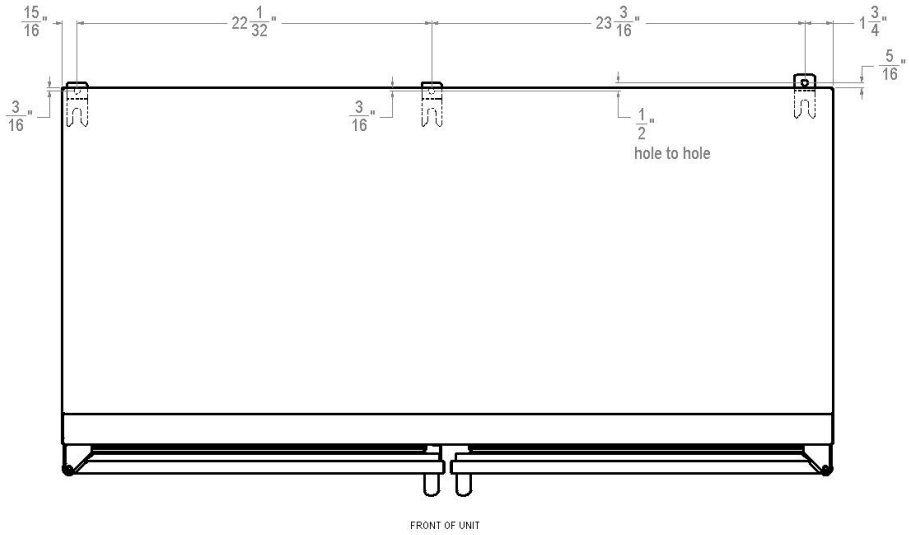

INSTALLATION

CAUTION
Finished flooring should be protected with the appropriate material to avoid damage from moving the unit.

If unit has been laid on its back or sides, place unit upright and allow minimum of 24 hours before connecting power.

1. Plug in the unit into the 15 amp grounded outlet located in the installation opening. With power applied to the unit, check that the lighting and cooling function operate properly, then turn off power to the wall outlet at the circuit breaker.

WARNING
Shut off power to the wall outlet before installing unit into the opening.

2. Check that the following are level and square:
- front face and interior opening
- installation opening and floor surface
- countertop bottom front edge

IMPORTANT NOTE: The floor under the unit must be at the same level as the surrounding finished floor.

3. If all surfaces are level, refer to Figure 8 (right) and perform the following:
   a. Measure from the floor to the bottom of the front edge of the countertop.
   b. Mesure the rear of the unit cabinet from floor to top of cabinet, at back corners.
   c. Adjust rear legs so B measurement equals A measurement. Usingt an adjustable wrench of pliers, turn legs counterclockwise to raise the unit or clockwise to lower the unit.

IMPORTANT NOTE: Leveling legs should not extend more than 3/4" from bottom of the unit.

4. Slide cabinet into position. Make sure the rear levelling legs slide under the anti-tip brackets. Push the unit into the opening until the bottom front edge of the unit is flush with the surrounding cabinetry, or until the rear legs are tight against the anti-tip brackets.

5. Shim the front of the unit so the front face is flush with the surrounding cabinetry. Adjust the front legs to support the countertop at the shimmed height. Using an adjustable wrench or pliers, turn the legs counterclockwise to raise the unit or clockwise to lower the unit. Countertop should be resting on top of the unit.

Figure 8 - Leveling

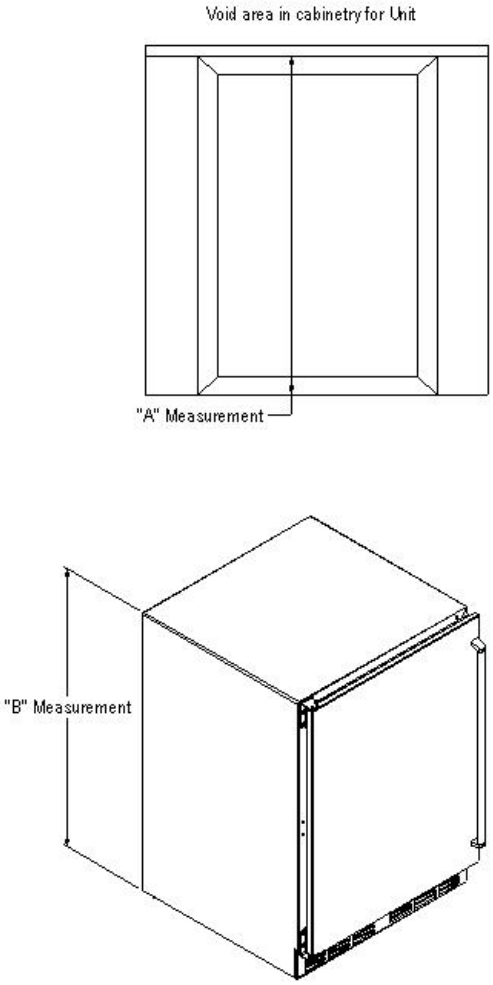

IMPORTANT NOTE: If countertop is not resting entirely on unit top, shim the countertop to prevent damage to the countertop.

CAUTION
To prevent damage to the countertop and unit underneath, do not place heavy objects on countertop directly above the unit.

6. Check interior door openings inside the cabinet to ensure the cabinet is level. Reinstall all shelving and sliding drawers squarely into slide brackets and proper slide bracket grooves. When sliding shelving and drawers are installed properly a click should be heard from both slide bracket retaining clips and should slide smoothly in the tracks. When sliding shelving or drawers are pulled out to full extension a stop is activated to prevent additional pull-out.

CAUTION
Improper shelving or drawer installation may not actuate slide top mechanism.

TOE PLATE INSTALLATION

When the unit is secured in place, install the louvered toe plate. Secure louvered toe plate by snapping the latch into the latch catch on the unit. Refer to Figure 9 (below) for Toe Plate Installation Illustration and Figures 10 (page 12) and 11 (page 13) for Toe Plate Wood Overlay template.

CAUTION
The louvered toe plate must be removed to service the unit. The floor cannot interfere with removal. The louvered sections must not be covered or obstructed to prevent proper air circulation.

IMPORTANT NOTE: To achieve maximum performance, interior louver openings and fan guard openings should never be obstructed.

Figure 9- Toe Plate Installation

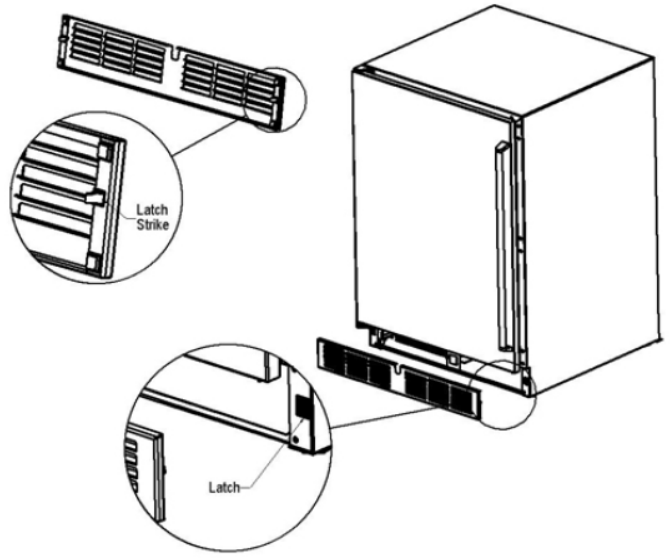

SHELVING

HP15TS Single Door Beer Dispenser
Shelving not available

HP24TS Single Door Beer Dispenser
Shelving not available

HP48RT Two Door Refrigerator/Beer Dispenser
The two door refrigerator/beer dispenser (HP48RT) comes standard with two full-extension black vinyl-coated pullout shelves on the refrigerator side. Shelving not available on beer dispenser side.

HP48RT Drawer/Door Refrigerator/Beer Dispenser
Shelving not available

Figure 10- Toe Plate Wood Overlay Template for HP15TS

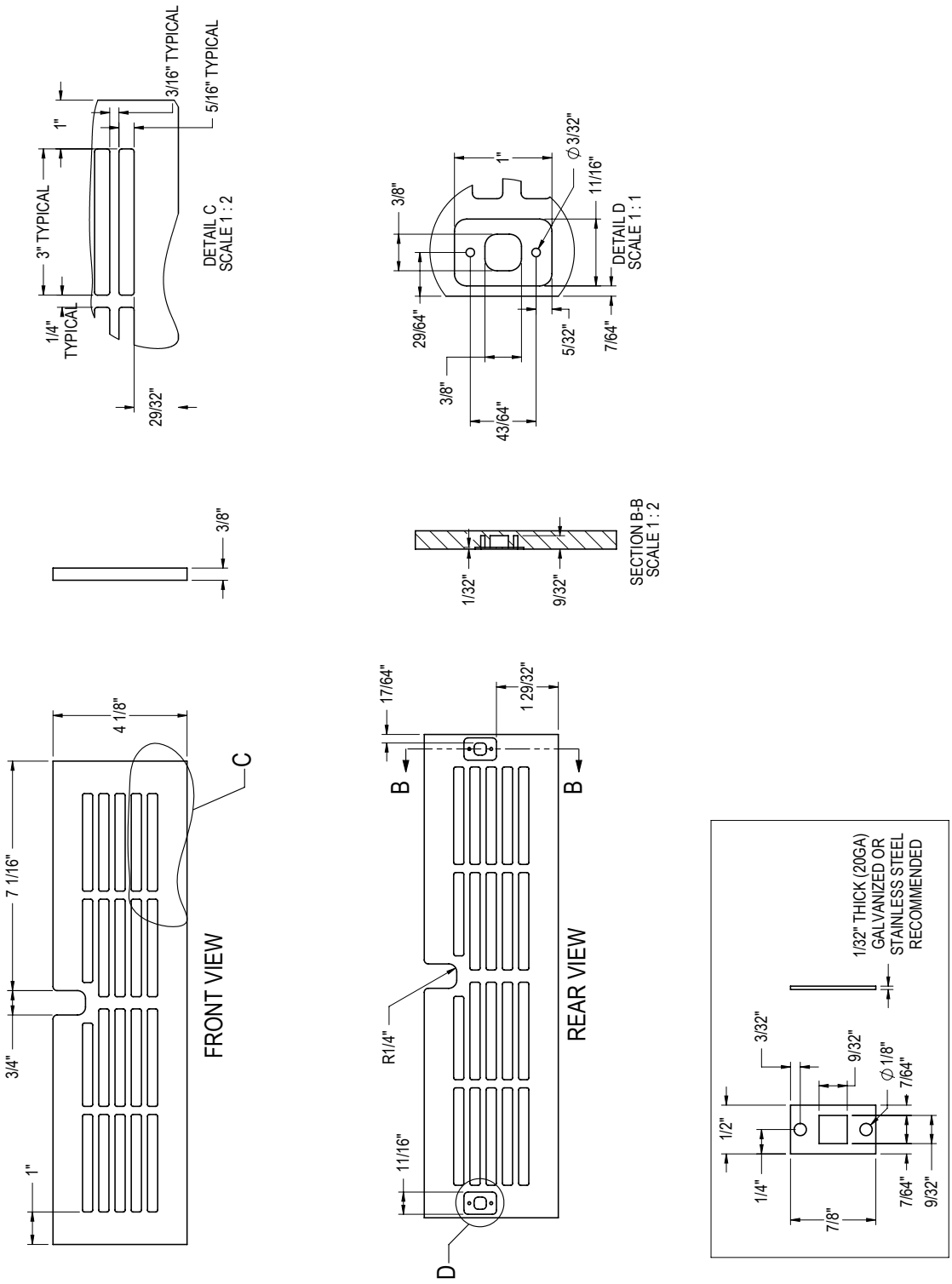

Figure 11- Toe Plate Wood Overlay Template for HP24TS and HP48RT

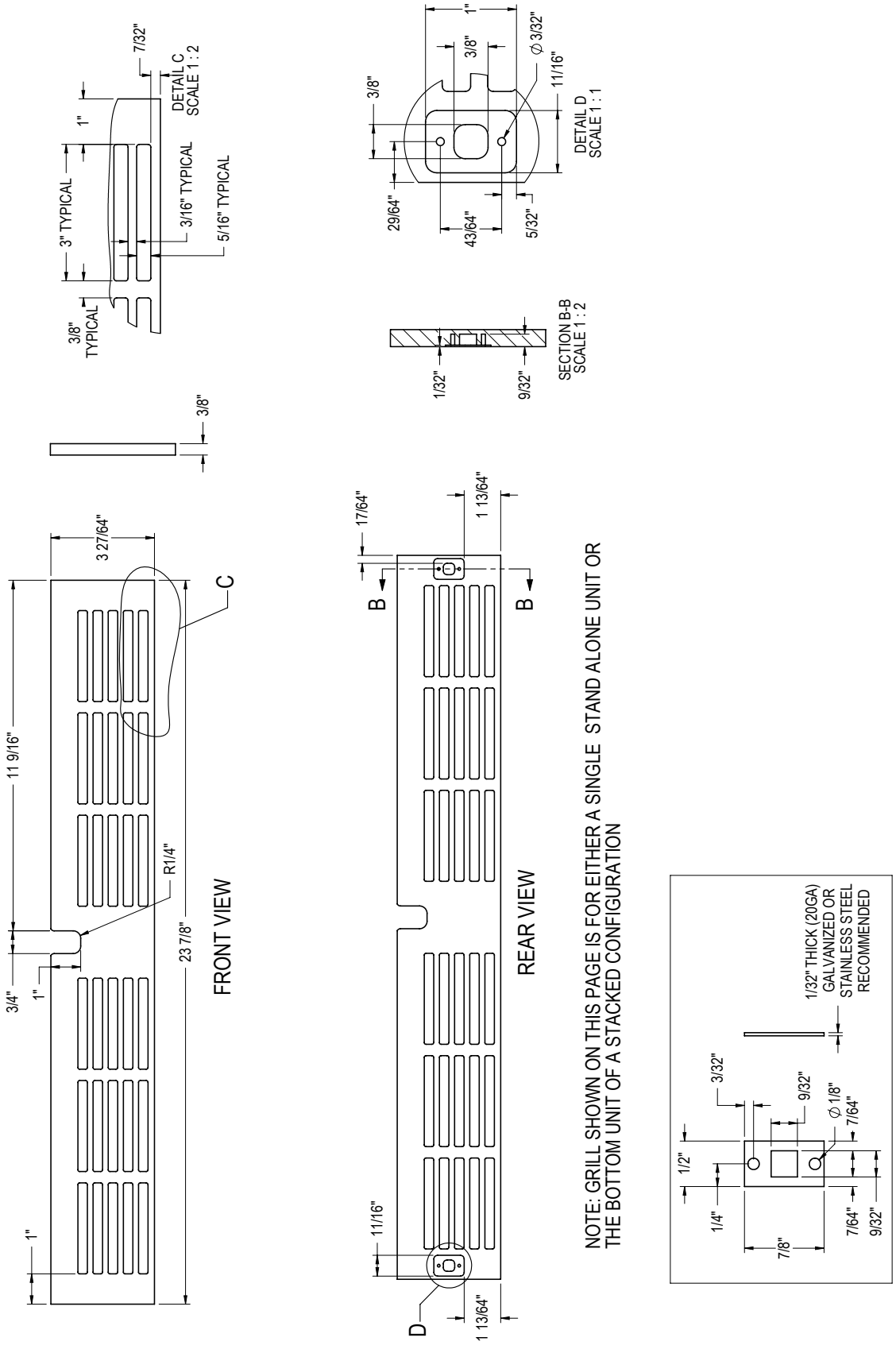

Adjusting Full-extension Shelving (HP48RT only)

1. Pull the shelf out to its farthest position. Locate the tabs in the middle of both extenders (Figure 12). Lift one tab up while pushing the opposite tab down and pull shelf out.

2. Reposition each bracket separately. Grasp the middle of the bracket, pull the front end up and out, then forward to remove (Figure 13).

3. Place bracket at the desired position. Push the rear hook into the rear key slot. Set front of the bracket on the wall hook.

4. Repeat for other bracket(s).

5. Push extenders completely into the unit. Align the shelf grooves with the extenders and slide completely into the unit.

Figure 12- Tab location

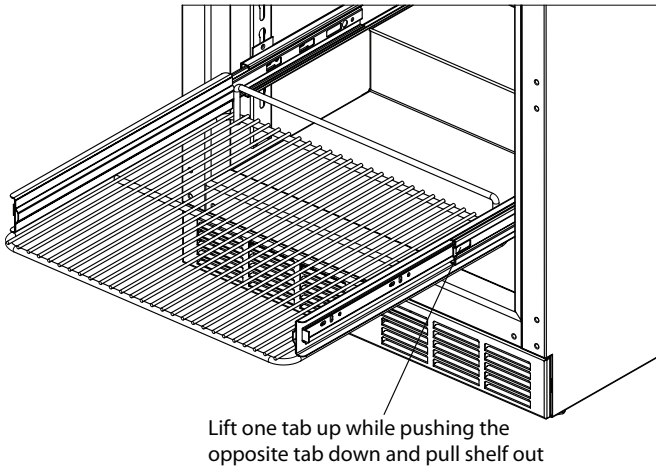

Drawers

Drawer units (available on HP48RT model only) come standard with two drawers. Like shelving, drawers are full-extension.

To remove drawers:

1. Pull the drawer out to its farthest point.
2. Locate the tabs in the middle on both sides of the extenders. Press left tab up and right tab down; pull shelf out.
3. Move each extender separately. Hold the middle of one extender, pull the front up then move extender 1/2-inch to the inside of unit. Pull up, then out.
4. Place extender at desired height, place rear standoff screw into rear pilaster, slide back. Place front stand-off screw into front pilaster, slide down.
5. To return drawer, first push both extenders completely in then line up the shelf grooves and slide easily into the unit.

CAUTION

Completely empty the drawer before removing.

Figure 13 - Bracket and extender location

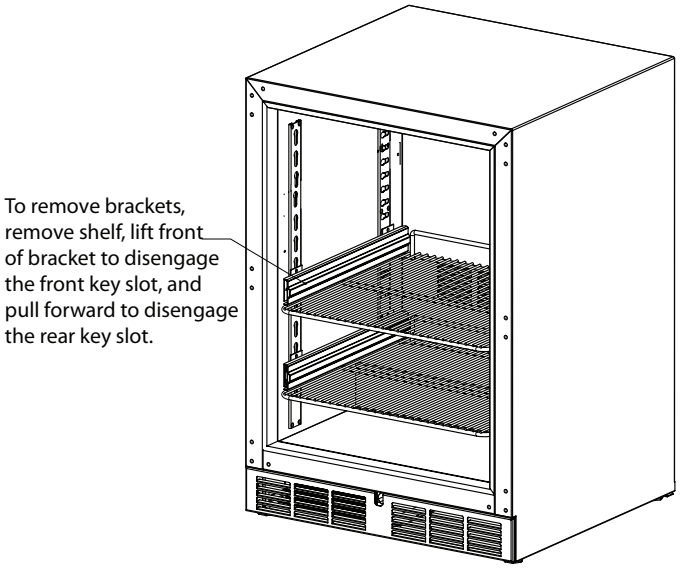

DOOR OPTIONS

Perlick residential units offer a variety of door panel design alternatives; solid stainless steel, solid wood overlay, glass with stainless steel trim and glass with wood overlay trim.

Solid stainless steel and stainless steel glass doors are shipped from the factory with decorative stainless steel panels and handles in place on the appliance.

Solid wood overlay and glass wood overlay doors are designed to accept a decorative front panel to match surrounding cabinetry and door handles. The panel and door handles are supplied by the customer.

All Perlick units accept any of the above door configurations and are fully interchangable.

IMPORTANT NOTE: Units with a beer dispenser only can utilize a solid stainless steel door or solid wood overlay door.

IMPORTANT NOTE: Glass with stainless trim and glass with wood trim may sweat in conditions with relative humidity over 75%.

WOOD OVERLAY INSTALLATION

Before beginning installation, check all components for proper fit and finish.

WARNING

- All overlay doors require a trim panel of at least 3/4" thick.
- The solid wood overlay panel should not weight more than 20 pounds.
- The glass wood overlay panel should not weight more than 10 pounds.

The following instructions cover installing a solid wood overlay or glass wood overlay panel and handle to a door or drawer.

IMPORTANT NOTE: Contact the factory or visit www.bringperlickhome.com for full size wood overlay panel layouts. Once on the site, select 'Service and Support' from the top menu bar and click on 'Wood Overlay Templates'. Take care in chosing the correct template for your specific model.

IMPORTANT NOTE: You must install optional lock and handle PRIOR to mounting the wood overlay onto the door frame.

Panel drawings:
Refer to Figure 15 for 15" solid wood overlay panel (page 16).
Refer to Figure 17 for 24" solid wood overlay panel (page 18).
Refer to Figure 18 for 24" for glass wood overlay panel (page 19).
Refer to Figure 19 for 24" drawer wood overlay panel (page 20).

Door Lock Installation (optional)
When installing to wood overlay, perform lock installation before mounting wood overlay to door.

1. See Figure 14 (below), attaching mounting bracket to wood overlay.
2. Insert lock body and attach with nut.

Lock installation drawings:
Refer to Figure 16 for Lock Installation on 15" solid wood overlay panel (page 17).
Refer to Figure 20 for Lock Installation on 24" solid wood overlay panel (page 21).
Refer to Figure 21 for Lock Installation on 24" glass wood overlay panel (page 22).
Refer to Figure 22 for Lock Installation on 24" drawer wood overlay panel (page 23).

Figure 14 - Lock installation

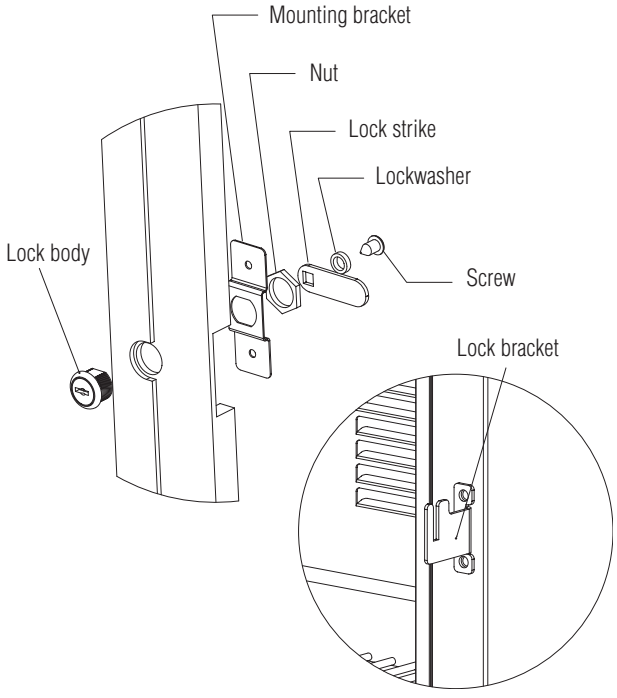

Figure 15 - Solid wood overlay panel template for HP15TS

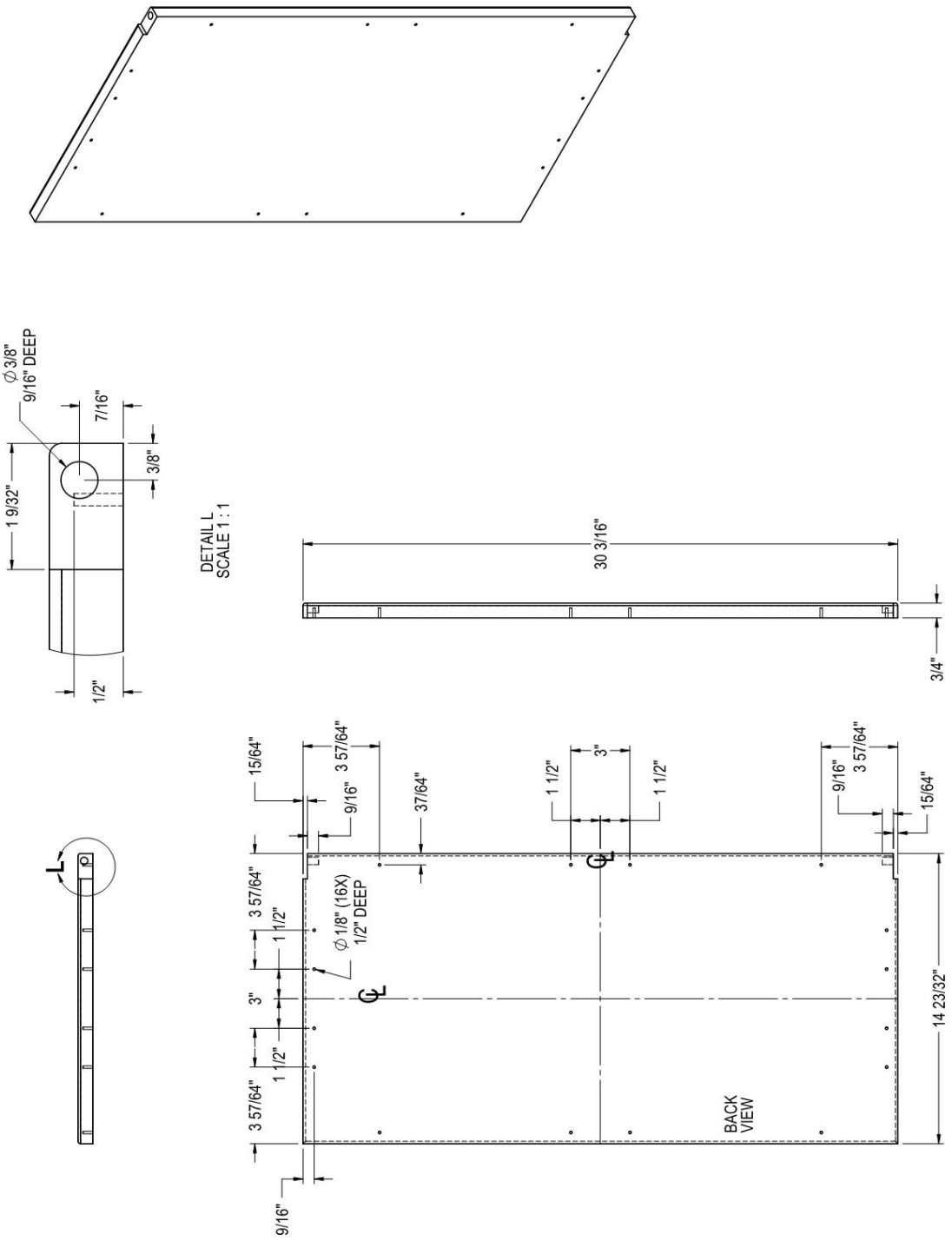

Figure 16 - Lock installation, solid wood overlay door panel for HP15TS

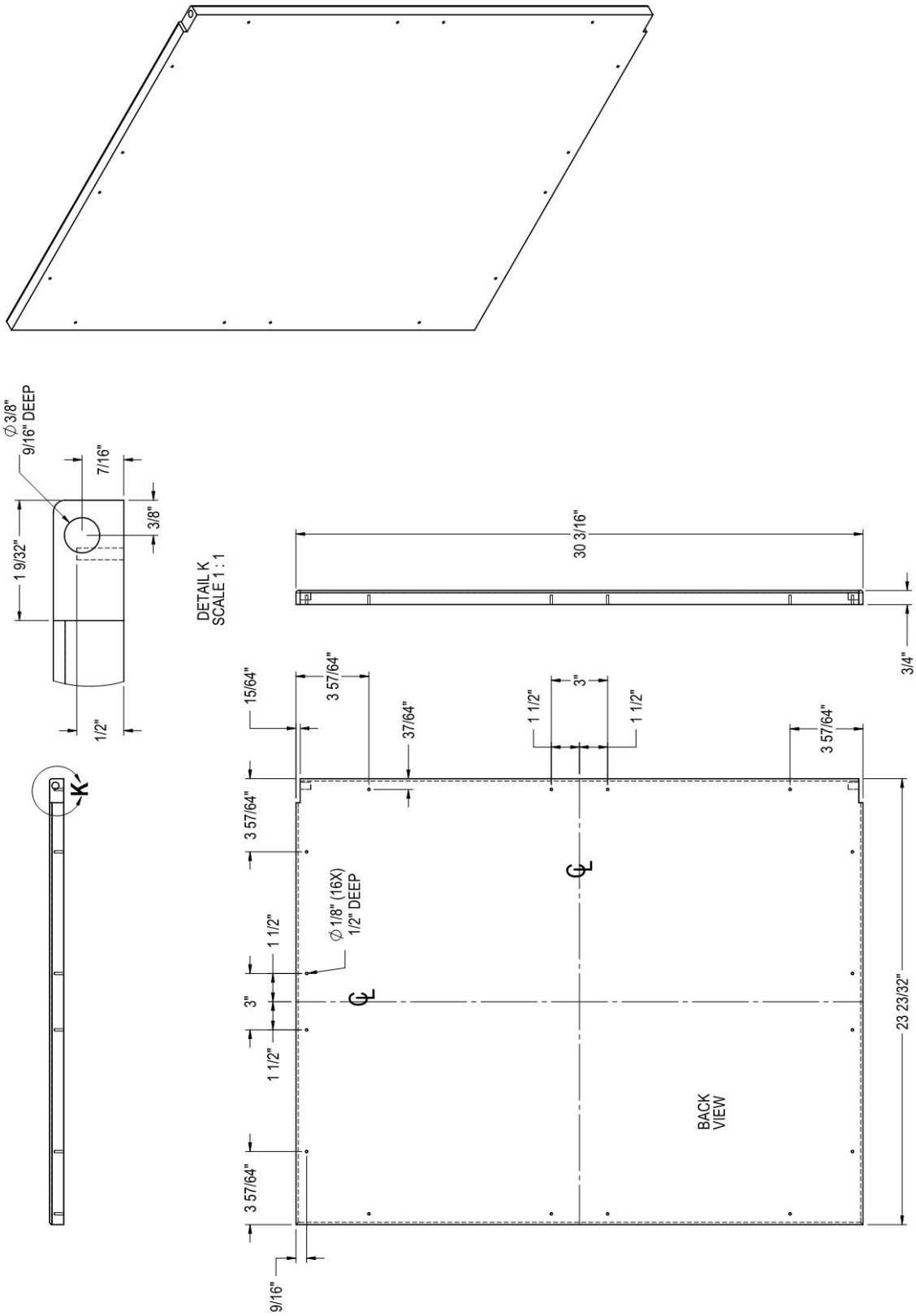

Figure 17 - Solid wood overlay panel template for HP24TS and HP48RT

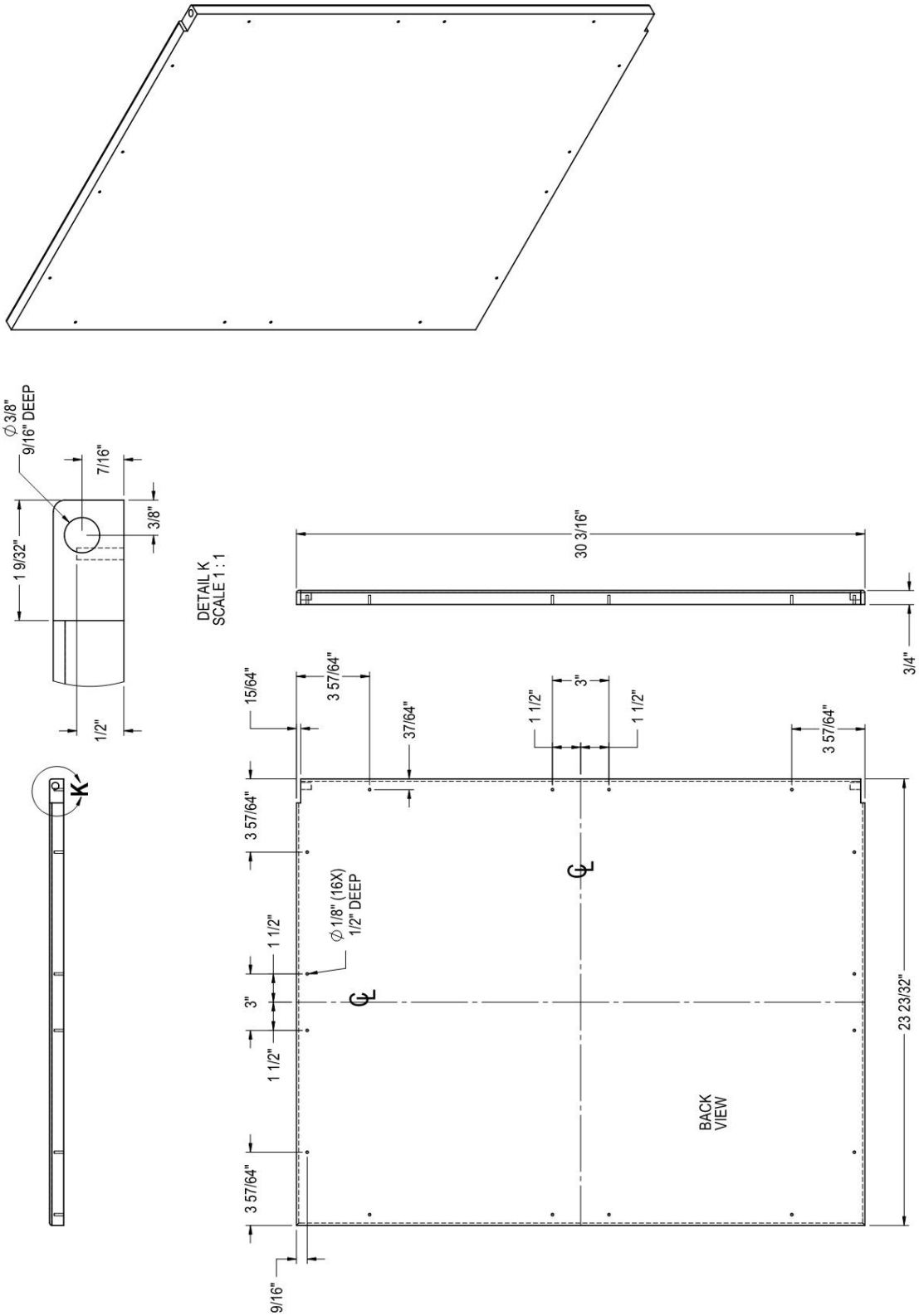

Figure 18 - Glass wood overlay panel template for HP24TS and HP48RT

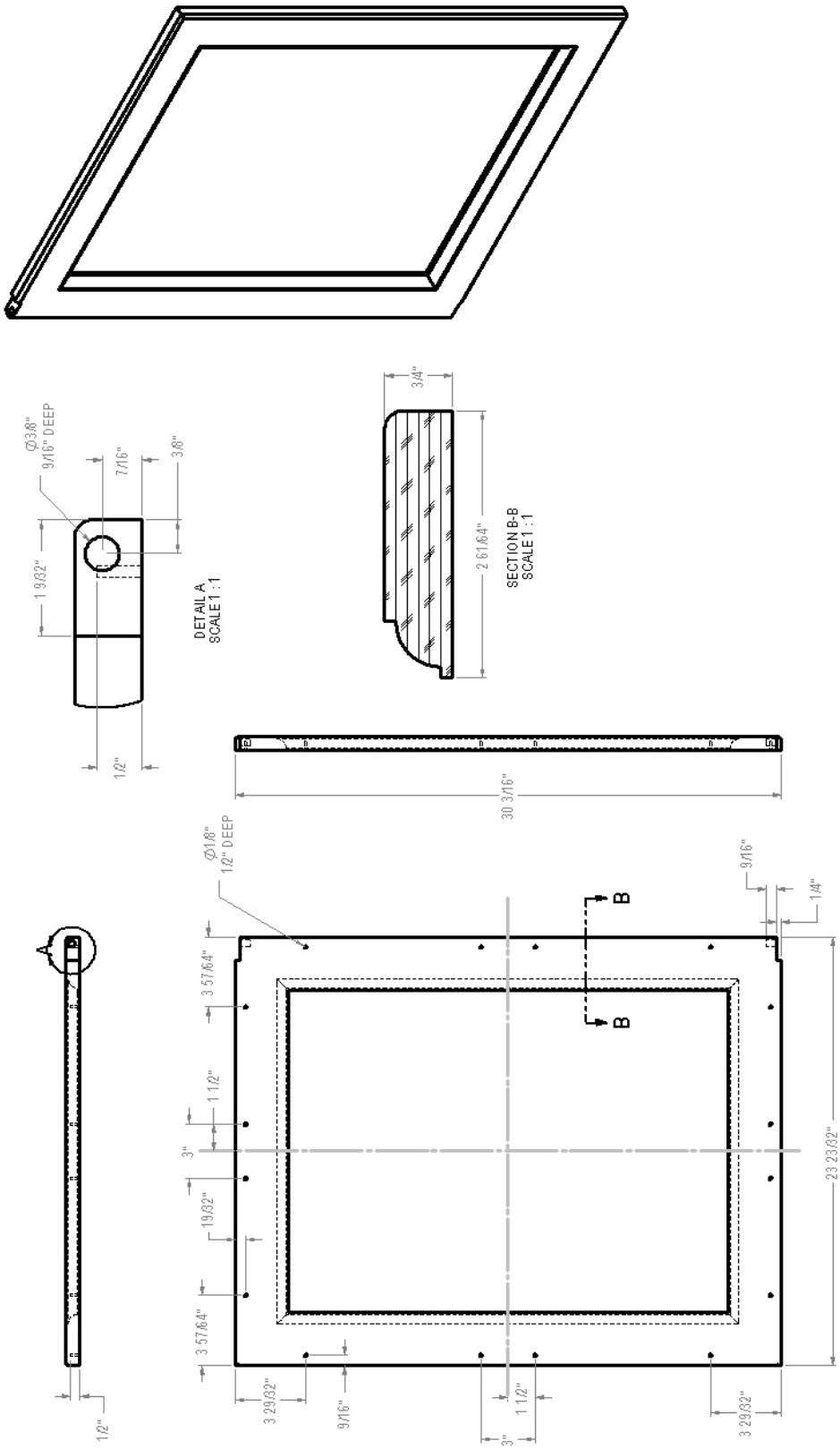

Figure 19 - Wood overlay drawer panel template for HP24TS and HP48RT

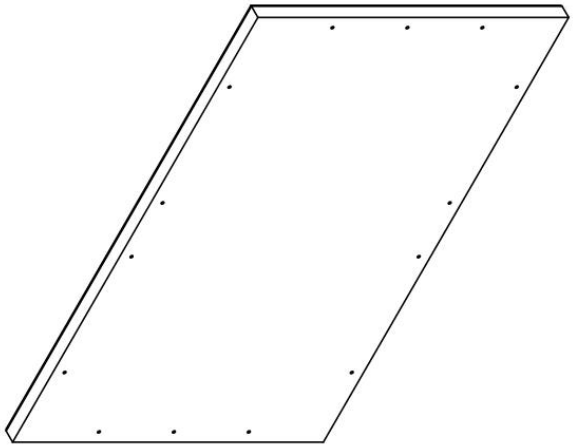

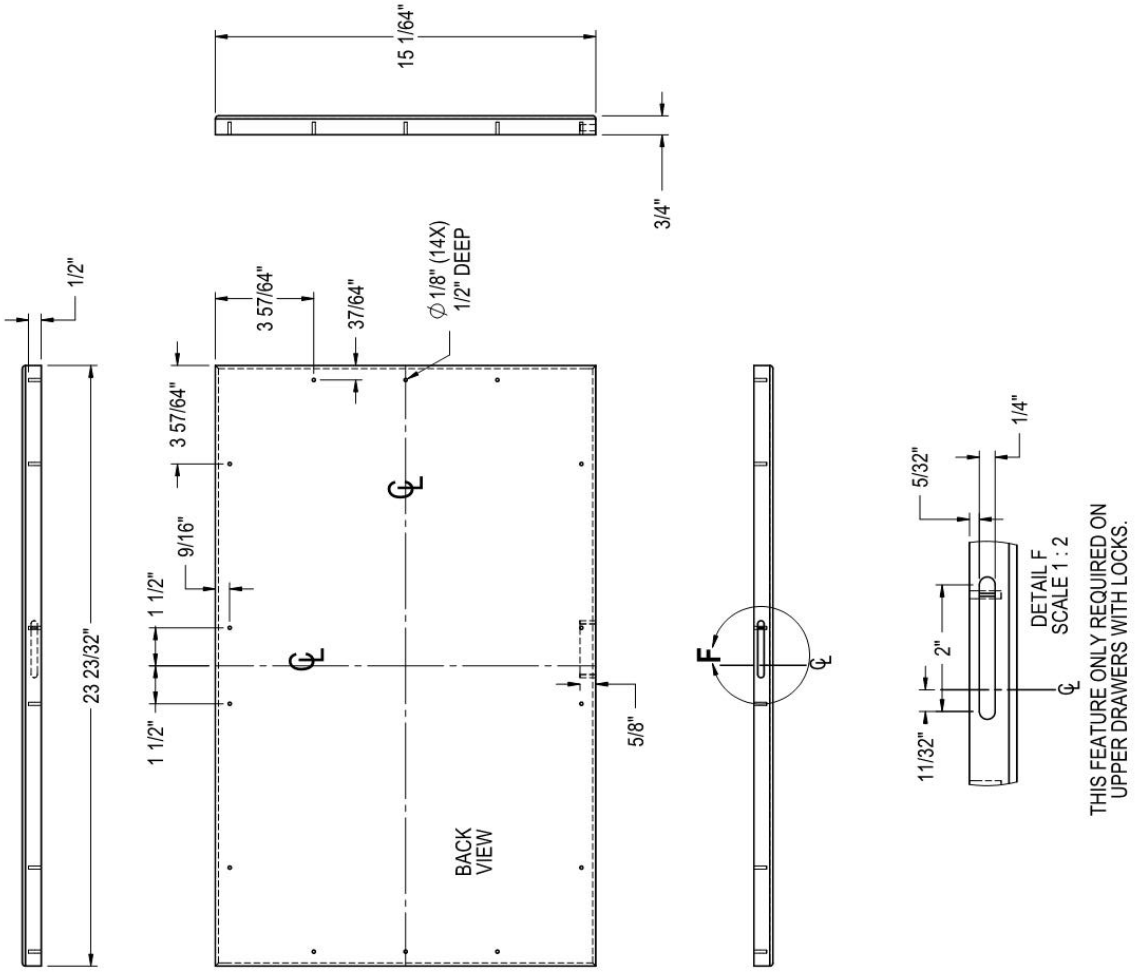

Figure 20- Lock installation, solid wood overlay door panel for HP24TS and HP48RT

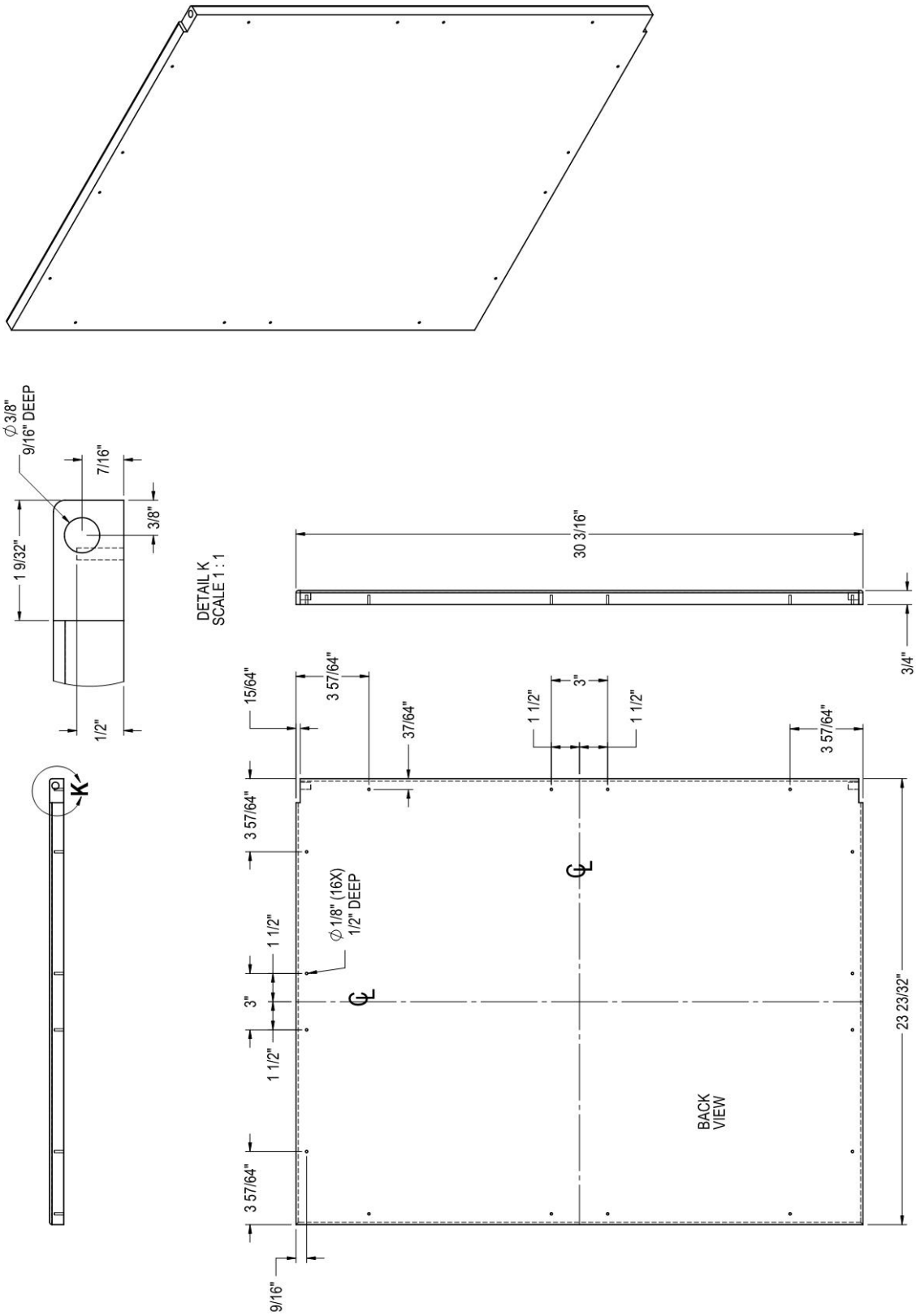

Figure 21 - Lock installation, wood overlay glass door panel for HP24TS and HP48RT

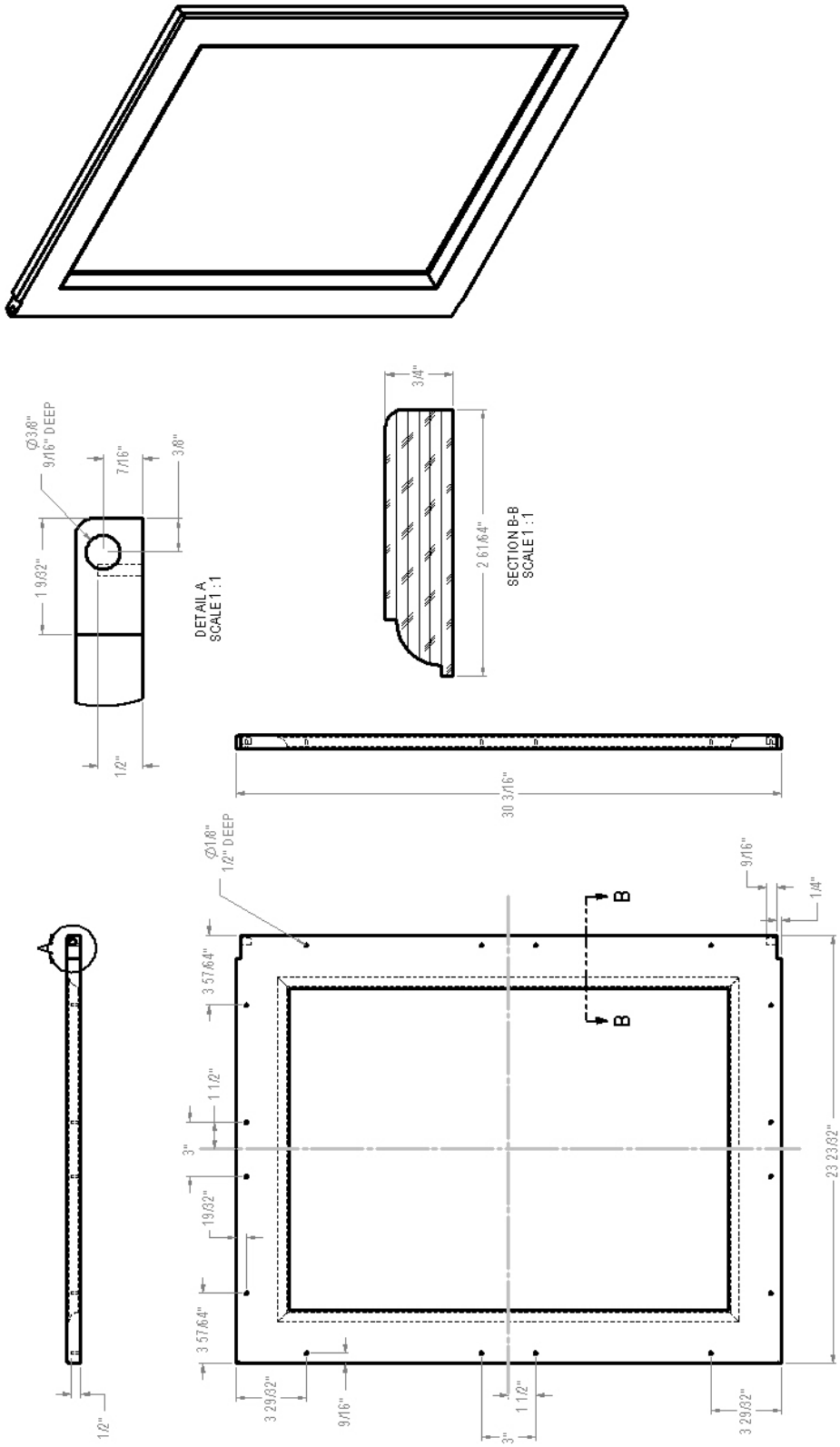

Figure 22 - Lock installation, wood overlay drawer panel for HP24TS and HP48RT

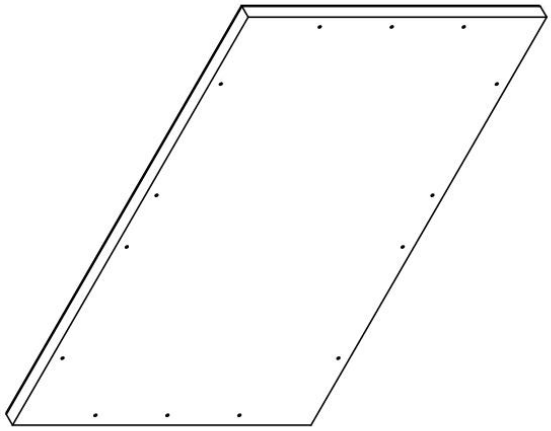

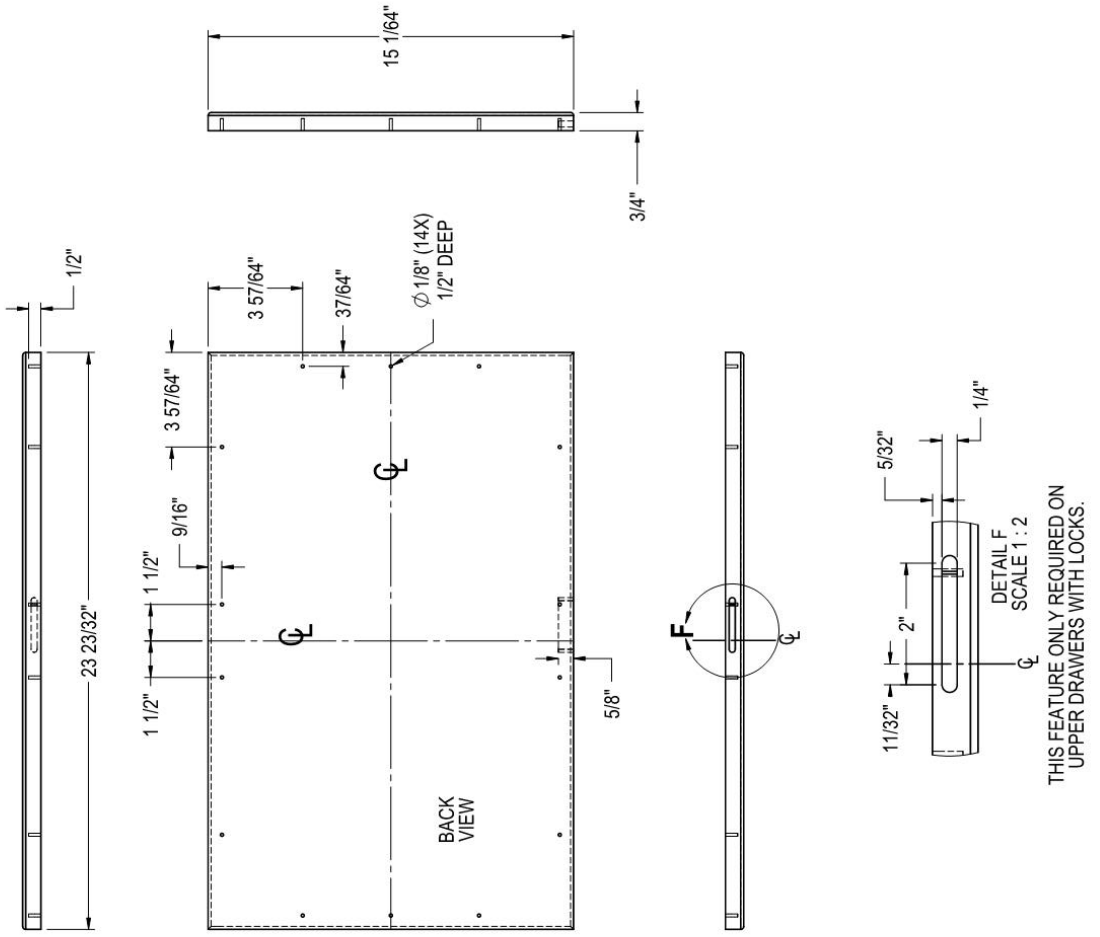

Handle Installation

CAUTION
Handle mounting on wood overlay door should be mounted on overlay panel only (not the door) to avoid damage to the factory door.

1. Handle must be attached to overlay before mounting overlay onto door. Mark rear of wood overlay planel with handle fastening locations.
2. Drill through wood overlay panel at marked locations taking care not to damage the wood overlay panel.
3. Countersink screw heads so screw heads are flush with back-side of panel. Attach handle to overlay panel.

CAUTION
Proper wood working materials and equipment should be used to avoid damage or errors in workmanship.

Wood Overlay Panel Installation

Scan the QR code to the right with your smart phone to watch a How-To video on how to install Wood Overlay panels onto Perlick doors, otherwise, follow the instructions below.

1. With the unit secured in position, open the door and make sure panel's pre-drilled holes align with door frame holes.
2. Loosely attach four corners of the overlay panel to the door using #10 x 1" wood screws, installed through the door frame from the rear.
3. Check for overall wood overlay panel fit, position and function. Make minor adjustments as necessary. When panel is properly aligned, tighten mounting screws securely. Install the rest of the mounting screws and tighten securely.

CAUTION
Do not over-tighten wood overlay attachment screws as this may damage the factory supplied door frame.

OPERATION

General
The unit is equipped with a state-of-the-art refrigeration system. The variable speed compressor automatically changes speed based on system conditions and load. The cabinet is equipped with an adjustable digital temperature controller and LED display.

Freezer units are frost-free models, meaning the evaporator coil automatically defrosts on demand at predetermined intervals.

The controller also has a manual defrost soft button on the front panel signified by a melting snowflake. If depressed it will automatically put the system into a defrost cycle.

Interior Light

The unit is equipped with an interior light that illuminates when the door is open. The cabinet also comes standard with a manual light switch located next to the light for displaying your products through a glass door.

Always ensure that the manual switch is in the off position before closing a solid wood or stainless door. If manual light switch is left on for an extended period of time it may increase the cabinet temperature, especially at the top and cause the refrigeration system to run longer.

Loading Product

IMPORTANT NOTE: Before storing perishables, allow unit to run for a minimum of 24 hours to allow temperature stabilization after start-up.

When loading items into the unit, do not block internal louvers and fan guard openings or performance will be decreased.

LIGHT BULB REPLACEMENT

To replace a defective or burnt out light bulb, unscrew the bulb counterclockwise and replace with an identical 15-watt bulb or smaller (Perlick replacement bulb number 67026).

TEMPERATURE CONTROLLER

SET: To display target set point; in programming mode it selects a parameter or confirm an operation.

(DEF) To start a manual defrost

(**UP**): To see the max. stored temperature; in programming mode it browses the parameter codes or increases the displayed value.

(**DOWN**) To see the min stored temperature; in programming mode it browses the parameter codes or decreases the displayed value.

To switch the instrument off, if onF = oFF.

Not enabled

KEY COMBINATIONS:

+ — To lock & unlock the keyboard.

SET + — To enter in programming mode.

SET + — To return to the room temperature display.

Each LED function is described in the following table.

LED	MODE	FUNCTION
	ON	Compressor enabled
	Flashing	Anti-short cycle delay enabled
	ON	Defrost enabled
	ON	An alarm is occurring
	ON	Continuous cycle is running
	ON	Energy saving enabled
°C/°F	ON	Measurement unit
°C/°F	Flashing	Programming phase

IMPORTANT NOTE: Dependent on the mode and configuration, the controllers have been programmed to only allow a temperature adjustment within a specified range. See chart below for the specified range allowed for your cabinet:

Single Door Units			
Description	**Model No.**	**Set Point**	**Range**
15" Beer Dispenser	HP15TS	38°F	30 °F to 42°F
24" Beer Dispenser	HP24TS	38°F	30 °F to 42°F

Two Door Units			
Description	**Model No.**	**Set Point**	**Range**
48" Refrigerator/Beer Dispenser	HP48RT	38°F	30 °F to 42°F

IMPORTANT NOTE: All mutli-zone units must have a minimum of 8°F difference between zones.

CHECKING PRODUCT TEMPERATURE

To accurately check the temperature of product stored in the refrigerated compartment insert an accurate thermometer into a plastic (non-breakable) bottle, partially filled with water. Tighten the bottle cap securely.

Place the bottle in the desired area for 24 hours. Refrain from opening the unit during testing period. After 24 hours, check the temperature of the water. Adjust the control settings if necessary.

You Perlick unit is pre-set in order to achieve the recommended temperature range when installed in a 70°F ambient room temperature. Factors which affect the internal temperatures of the refrigerated cabinet include:

- Temperature setting
- Room temperature where installed
- Number of times the door is opened and closed
- Length of times the door is left open
- Style of door installed
- Door gasket sealing and condition
- Amount of time the internal light is illuminated
- Installaion in direct sunlight or near a heart source

CLEANING AND OTHER MAINTENANCE

CAUTION
Shut off electricity to the unit before cleaning the condenser and other routine maintenance.

To clean stainless steel exterior or interior surfaces, use a soft, non-abrasive stainless steel cleaner to wipe down the surfaces. If you have difficulty finding a good cleaner, try Signature Polish from Signature Limited Laboratory, P.O. Box 13436, Dayton, OH 45413-0436; or call toll-free at (877) 376-5474. Glass panels can be cleaned using any standard glass cleaner available on the market today.

To clean interior and exterior non-metallic surfaces and removable parts, wash with a mild solution of soap and lukewarm water with a little baking soda. Rinse and dry thoroughly. Avoid getting water on lights, controllers, fan motors and unfinished wood wine rack faces.

CAUTION
Do not use abrasive cleaners or cloths on any of the interior or exterior surfaces or removable parts.

Cleaning the Condenser
The condenser should be cleaned every three (3) months. The condenser is located behind the toe plate (Figure 6). Remove the toe plate and use a soft bristle brush and vacuum to remove the dust and lint. Avoid damaging or crushing the condenser fins or tubing. Upon completion, reinstall the toe-plate.

CAUTION
Failure to clean the condenser could result in temperature loss or mechanical failure. Clean this area every three months.

INSTALLING DISPENSING EQUIPMENT

Open tapping kit box and become familiar with its components. If the dispensing head is going to be mounted on a counter top directly above the refrigerated cabinet, have the countertop predrilled using the supplied template or the template provided on page 30. Make sure that the access hole in the refrigerated cabinet is in line with the counter top holes. Remove any obstructions from the access hole of the refrigerator. Follow instructions on pages 28 and 29 to properly install the tapping equipment on your Perlick unit.

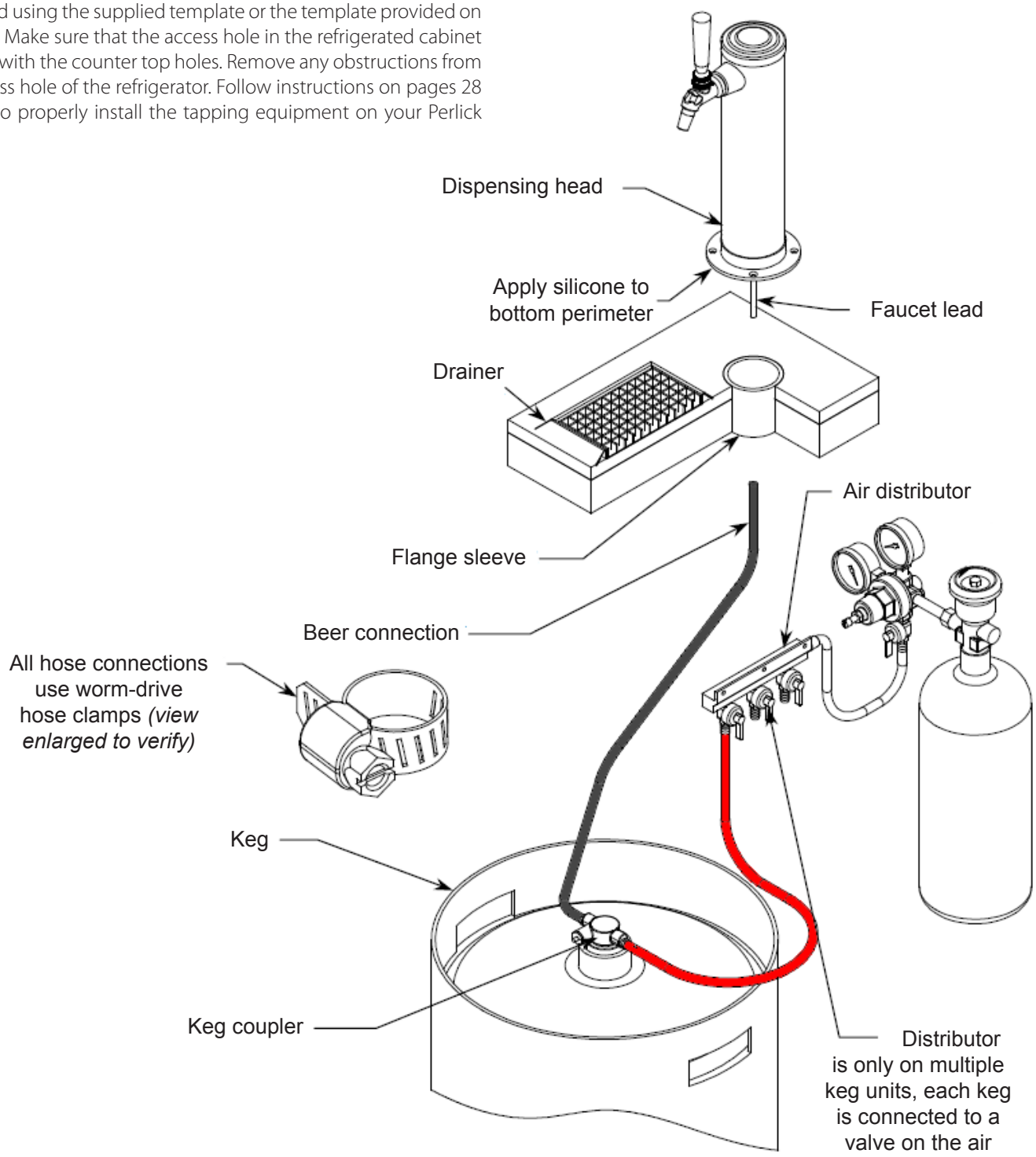

NOTE: Image does not accurately reflect positions of the different elements within the unit. Positions and hose lengths shown are to clearly illustrate proper connection methods only.

BEFORE YOU BEGIN...
Wash tapping devices thoroughly. Flush beer and faucet lines and tapping device (keg coupler) with fresh water.

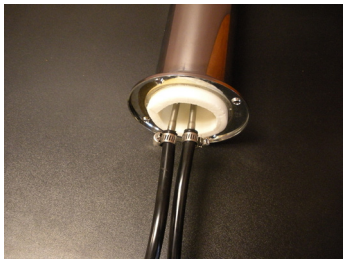

1. Locate the dispensing head, black beer line(s), and hose clamp(s). Slide one end of each beer line onto the stainless steel tubes which protrude out the bottom of the dispensing head and clamp tight.

2. Insert the beer line(s) through the hole in the counter top. Position the head in place and apply silicone around the base of the dispensing head. Fasten using the 4 chrome screws included with the dispensing head. Wipe off excess silicone to complete the seal.

3. Using the 3/8" thick foam pad included in the tapping kit, roll into a cylinder. From inside the cabinet, insert the foam tube up through the hole in the ceiling of the cabinet, through the hole in the counter top until it is firmly against the insulation in the dispensing head. Cut away any excess pad. Cut away any excess foam that extends into the cabinet that extends into refrigerator.

4. If installing a two or three faucet system, a CO2 manifold will need to be installed. Locate the plastic manifold holding bracket and a #10 x ½" sheet metal screw. On the left rear side wall of the beer compartment there is a double row of screws which run vertically. Remove one of the two top screws and discard. Insert the sheet metal screw through the bracket and into the hole vacated previously.

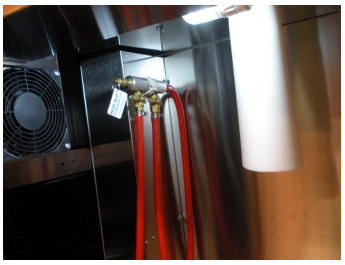

5. Locate the red CO2 lines, manifold and clamps. Slide one end of each hose onto the barbed fittings on the manifold and clamp. Insert the manifold into the bracket and secure by squeezing the two sides together.

6. On a single beer system, locate the red CO2 hose. Slide one end onto the barbed fitting of the regulator assembly and clamp. On systems with two or three beers, locate the CO2 line that comes off the back side of the manifold assembly. This is the hose not connected to a valve assembly. Slide the hose end onto the barbed fitting of the regulator assembly and clamp. For detailed information on connecting the regulator to the CO2 cylinder, see page 31.

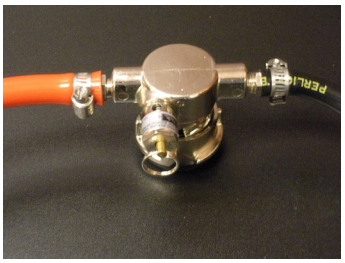

7. Locate the keg coupler(s). Slide one of the red CO2 lines onto the larger barbed fitting of coupler and clamp. Locate one of the black beer lines and slide onto the smaller barbed fitting of the coupler and clamp. Repeat for additional couplers.

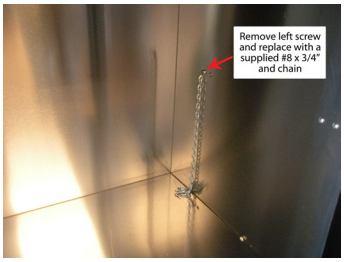

8. On the right rear sidewall there is a double column of screws. Remove the center rear screw. Locate the safety chain and a #10 x ½" sheet metal screw from the parts bag. Insert the screw through the closed end link of the chain and tighten in the vacant screw hole. The chain can now be used to secure the tank, preventing damage to the regulator.

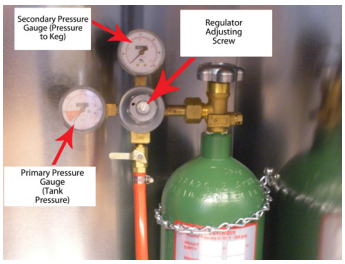

9. CO2 tanks are shipped empty and must be filled prior to uses. Turn the adjusting screw on the regulator counter-clockwise one turn. Make sure that the valve at the bottom of the regulator where the red hose is connected is in the off position as shown. Open the tank valve. Watching the secondary pressure gauge, turn the regulator adjusting screw clockwise until the pressure is at 10 psig. Adjustments can later be made based on flow rates.

10. Locate beer faucet(s) and install onto the dispensing head shanks. Tighten with supplied spanner wrench. Install black handle(s) onto faucet(s).

11. Before tapping, make sure the beer faucet is closed. To tap a keg, insert the coupler into the fitting on top of the barrel. Turn the coupler clockwise until it stops (about 1/8 turn). Then push down on the top of the coupler and again turn clockwise until it stops. Your barrel is now tapped. Open the CO2 valve on the regulator as well as the valve on the manifold if used. Using Soap and water solution, check all CO2 connections for leaks indicated by bubbles. Tighten as needed.

MOUNTING HOLE TEMPLATE FOR DRAFT ARMS

ATTENTION INSTALLERS

THIS IS A FULL SIZE TEMPLATE. PLEASE CONFIRM THAT PRINT DIMENSIONS ARE TO SCALE PRIOR TO INSTALLATION.

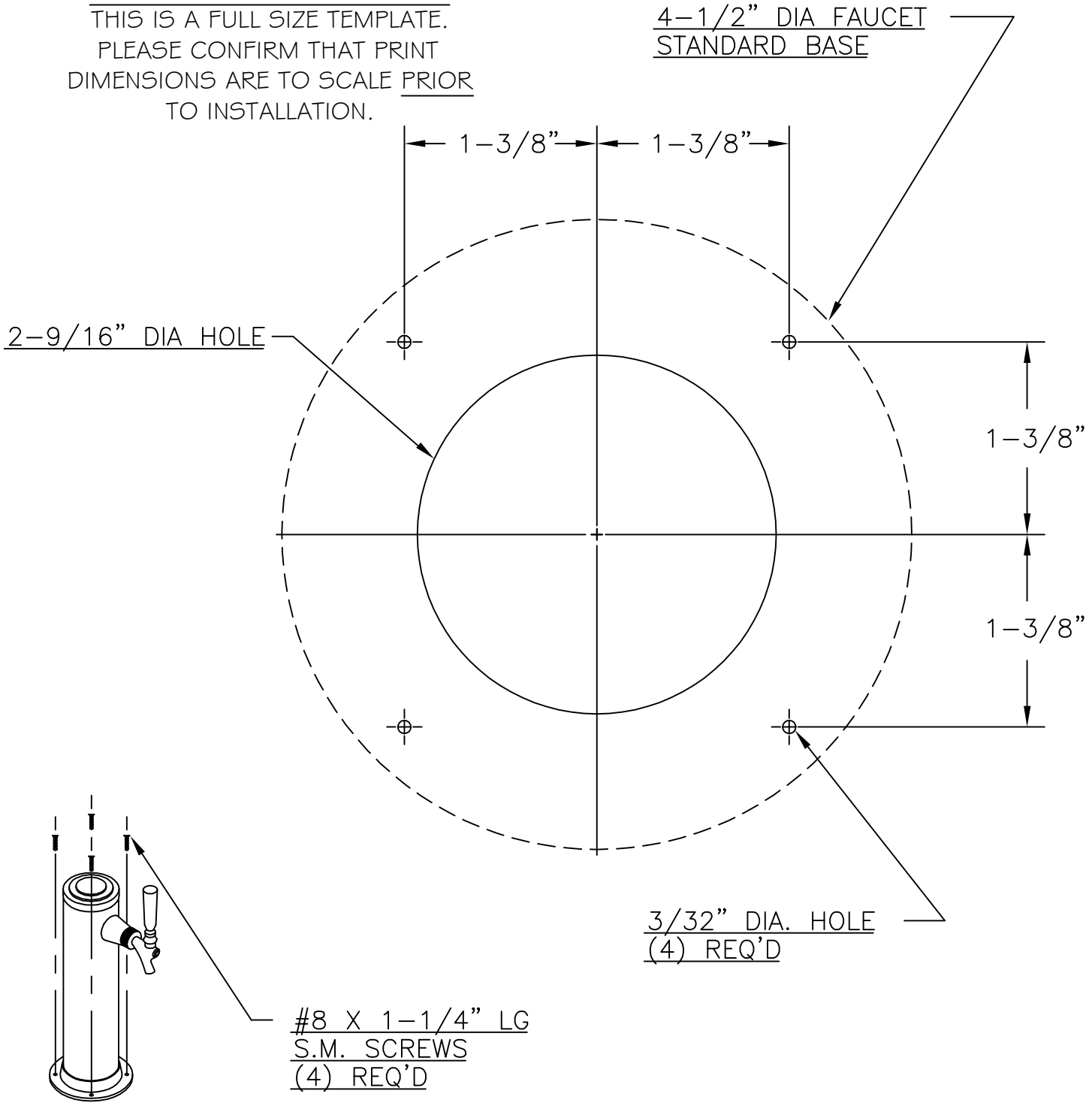

CONNECTING THE REGULATOR TO THE CO2 CYLINDER

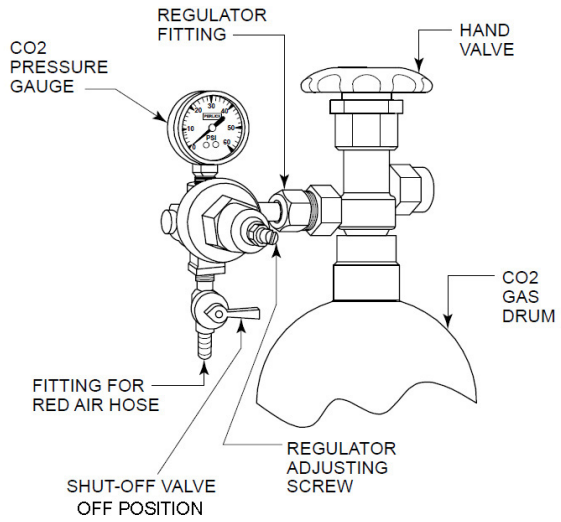

1. Remove the blue plug from the regulator fitting. NOTE: Do not remove the carbonic washer.

2. Screw regulator onto gas cylinder valve. Tighten with wrench until vertically straight. Be sure that shut-off valve on regulator is in the OFF (horizontal) position.

3. Place screw clamp over the end of red line and push onto regulator tailpiece. Tighten clamp with a screwdriver.

4. Turn regulator adjusting screw counterclockwise until it turns freely.

5. Turn hand valve counterclockwise on the CO2 cylinder to the fully open position.

6. Turn regulator adjusting screw clockwise until desired pressure is reached (approximately 12-15 lbs.) Tighten stop nut on adjusting screw.

7. Open shut-out valve on bottom of regulator.

CO2 LEAK TEST

Dilute a small amount of liquid dishwashing soap and rub the soapy mixture around each connection. If bubbles appear, tighten connection.

REPLACING THE CO2 GAS CYLINDER

1. Turn CO2 hand valve clockwise until seated and close shut-off valve on regulator.

2. Unscrew regulator from cylinder fitting.

3. Replace carbonic washer (Part No. 157F2P), if needed, and reattach regulator to filled cylinder.

4. Turn CO2 hand valve counterclockwise until fully open. Turn regulator shut-ff valve to open position.

5. Adjust CO2 gas flow as required, turning clockwise for higher pressure.

CAUTION

Do not use keg coupler as a handle to lift keg.

PROPER CO2 HANDLING

ALWAYS...

- Connect a regulator (reducing valve) to CO2 cylinder.
- Secure cylinder in upright position whether in storage or in use.
- Keep cylinder away from heat. Rupture disc vents at 122°F maximum.
- Ventilate room after gas leakage.
- Check the last DOT test date on cylinder neck before filling. If more than five years old, the cylinder must be retested to DOT specifications.
- Be sure CO2 cylinder outlet fitting is free of dust or dirt before attaching regulator.
- Store CO2 cylinder and regulator assembly upright.
- Allow only properly trained and experienced personnel to handle high pressure gas.

NEVER...

- Connect cylinder directly to a keg without a regulator (reducing valve)
- Drop or throw regulator or CO2 cylinder.
- Transport CO2 cylinder in a closed vehicle.
- Apply oil to a regulator.
- Shut off CO2 cylinder when not in use. You will not save gas by doing so!
- Allow untrained, inexperienced personnel to handle high pressure gas.

CAUTION

Be sure to close the gas shut-off valve when untapping the keg.

TAPPING A SINGLE VALVE KEG
(Sankey)

Single Valve Coupler

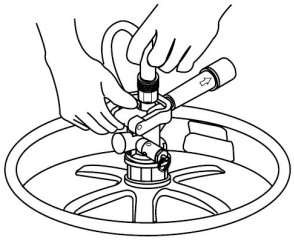

Step 1

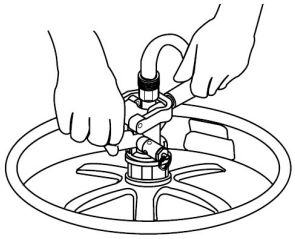

Step 2

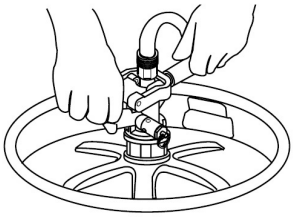

Step 3

- Be sure beer faucet is in closed position.
- Align keg lug openings on bottom of coupler.
- Turn clockwise 1/4 turn. Pull handle out and down. Keg is now tapped.
- Open shut-off valve on air divider located inside of the cabinet.

IMPORTANT
Be sure to close the gas shut-off valve when untapping a keg.

TAPPING A SINGLE VALVE KEG
("Low Profile" Coupler)

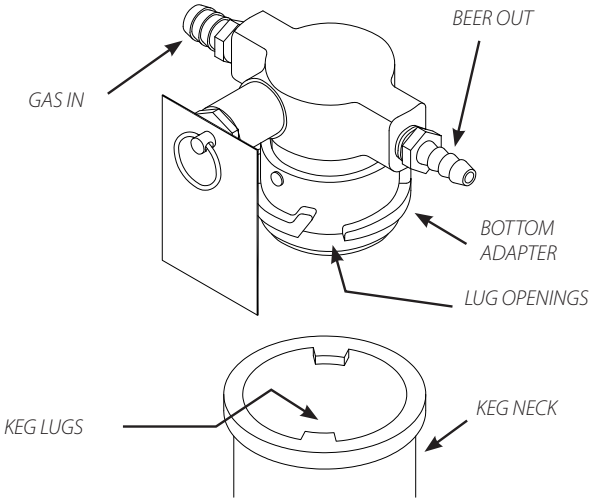

To tap, place bottom adapter in extended position, align lug openings and insert into keg, turning clockwise to stop. To open beer valve, push down and turn clockwise to second stop.

IMPORTANT
Be sure to close the gas shut-off valve when untapping a keg.

TEMPERATURE
One of the most common causes of dispensing problems is improper temperature. Draft beer should be stored at a temperature between 32°F and 38°F. At warmer temperatures, beer will foam. At temperatures lower than 30°F, beer will freeze. When beer freezes, the alcohol in the beer may separate and cause beer to be cloudy with an "off" taste.

HOW TEMPERATURE DRAFT AFFECTS BEER

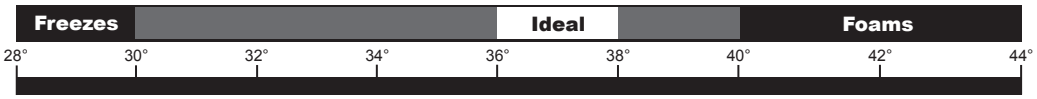

CLEANING THE BEER SYSTEM

The entire beer system, to include the faucet, flexible beer line and tapping devices must be cleaned at regular intervals. We recommend flushing the entire system with fresh water immediately after a keg has been emptied. Once each month the system should be cleaned chemically.

It is recommended that you purchase Perlick's Pump Type Sterilizer, as shown below. It is equipped with an adapter that attaches directly to the faucet shank in lieu of the faucet.

Part No.	Description
63797	Beer line cleaning kit
BLC4	4 oz. Cleaner
BLC32	32 oz. Cleaner

Cleaning the draft beer system will help to eliminate the buildup of the following:

Bacteria
Beer is an excellent food for bacteria (none of which is harmful). Proper conditions may begin the growth of bacteria in the draft beer and on the beer faucet. By regular cleaning, we prevent this bacteria buildup and maintain the quality of the draft beer. Greenish or yellowish colored material on the faucet may indicate bacterial growth.

Yeast
All domestic draft beers contain a small amount of yeast which remains in the beer from the fermentation process. When the temperature of the draft beer exceeds 50°F, a process of secondary fermentation may take place. The beer faucet may exhibit a white colored substance (yeast buildup) if not cleaned on a regular basis.

Beer Stone
All beer contains calcium which is present from the grains used in the brewing process. It is an important natural material in draft systems in that as it oxidizes, it's coats the internal parts of the beer line and equipment. This thin coat of beer stone helps prevent the beer from picking up a strong metallic or plastic flavor as it flows through the system. The beer stone will continue to build if the system is not cleaned properly or regularly and can cause drawing problems if it begins to flake off. Beer stone is present if one can see a brownish color on the faucet or inner wall of the beer line, or tobacco-like flakes in the beer.

BEER SERVICE PROBLEMS

Wild Beer
Problem: Dispensed beer either has too much foam or is all foam.
Causes:
- Beer has been dispensed improperly-
  Solution: See pouring instructions on page 33
- Regulator pressure is set too high
- Warm keg temperature-
  Solution: Keg must be colder than 40°F. Target temperature is between 36° and 38°F
- Cabinet door is opened and closed frequently and the temperature is warmer than 38°F-
  Solution: Adjust temperature to between 36° and 38°F.
- Kinks, dents or obstructions in the line
- Using oddly shaped glasses. Frosted, waxed or styrofoam containers also may cause foaming.
- Dispenser has been turned off for a long period of time.
- Faucet is bad, dirty or in a worn condition.
- Regulator malfunction

Flat Beer
Problem: Foamy head disappears quickly; beer lacks brewery fresh flavor.
Causes:
- Dirty glassware
- CO2 pressure is too low due to leak or pressure setting.
- CO2 is turned off at night
- Cooler is too cold
- CO2 leak or defective (sticking) check valve
- Sluggish CO2 regulator

Cloudy Beer
Problem: Beer in glass appears hazy, not clear.
Causes:
- Dirty glassware
- Dirty faucet or beer line
- Frozen or nearly frozen beer
- Old beer
- Beer has not been refrigerated for a long period of time.

BEER AND CO2 FACTS

- Beer foam is 25% liquid beer and 75% CO2 gas. Don't waste it all!
- Most people prefer beer stored at 38°F.
- Beer lines and faucets require regular cleaning (see cleaning instructions on page ###).
- A fully-charged 4.2 lb. CO2 cylinder will dispense approximately 5-1/2 or 6-1/2 barrels.
- CO2gas gives beer its sparkling effervescence. It also gives beer its creamy head of foam.

POURING THE PERFECT GLASS OF BEER

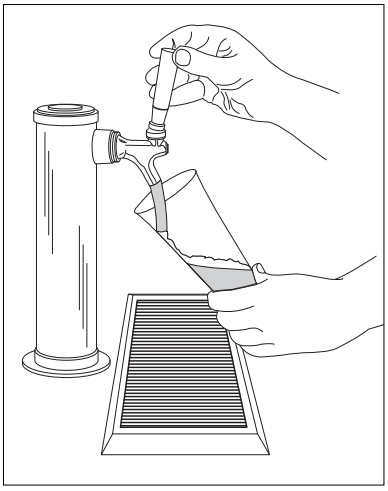

STEP ONE

Start with a clean glass. Place the glass at a 45° angle, one inch below faucet. Do not let the glass touch the faucet. Open the faucet all the way.

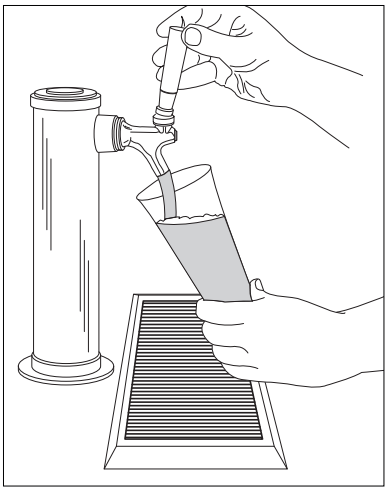

STEP TWO

Start with a clean glass. Place the glass at a 45° angle, one inch below faucet. Do not let the glass touch the faucet. Open the faucet all the way.

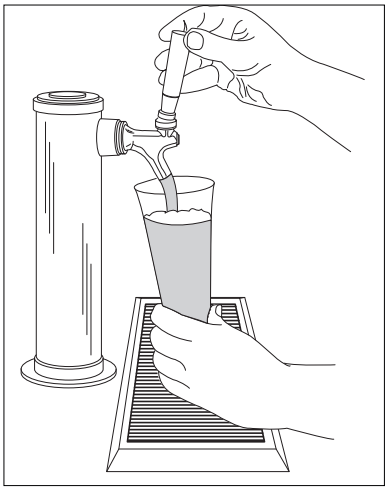

STEP THREE

Let the remaining beer run straight down the middle of the glass. This ensures proper release of CO_2 by producing a 3/4" to 1" foam head.

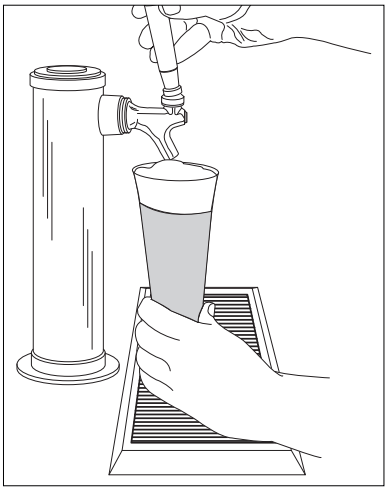

STEP FOUR

Close the faucet quickly and completely.

TROUBLESHOOTING

BEFORE CALLING FOR SERVICE:
If the unit appears to be malfunctioning, read through NORMAL OPERATION first. If the problem persists, check the TROUBLESHOOTING GUIDE. Locate the problem in the guide and refer to the cause and its remedy before calling for service. The problem could be something which can be solved without a service call.

DANGER
NEVER ATTEMPT TO REPAIR OR PERFORM MAINTENANCE ON THE UNIT UNTIL THE MAIN ELECTRICAL POWER HAS BEEN DISCONNECTED!

Problem: No interior light
- Is the bulb loose?
- Is the bulb burnt out?

Problem: Light stays on when door is closed
- Manual ON/OFF light switch is turned ON
- Is the door switch making contact with the door?

Problem: Noise during operation
- Certain sounds are normal. Soft sounds from the compressor, fan motor and valves will be heard
- During freezer defrost crackling is normal

Problem: Controller display is flashing "P1"
- There is a thermostat probe failure

Problem: Controller display is flashing "P2"
- There is an evaporator probe failure

Problem: Controller display is flashing "HA"
- The internal compartment temperature has exceeded the high temperature alarm preset value for over 30 minutes.
- Check to ensure door is closed
- Check door gasket seal
- Has warm product been placed in the cabinet?
- Is the condenser clean?
- In the louvered toe plate obstructed?
- Has the surrounding ambient temperature changed dramatically?
- Is the interior light ON?

Problem: Controller display is flashing "LA"
- The internal compartment temperature has exceeded the low temperature alarm preset value for over 30 minutes
- Check to ensure door is closed
- Check for gasket seal
- Has the surrounding ambiant temperature changed dramatically?

Problem: Controller display is flashing "EE"
- The controller has a data or memory failure

Problem: The refrigerated cabinet isn't running
- Is there electrical power to the unit?
- Is your home circuit breaker or fuse on?
- Is your ON/OFF key pad on?
- Is your condenser area clean?

Problem: The refrigerated compartment is warmer than usual
- Is your control set properly?
- Is the light staying on?
- Is your condenser area clean and free of obstructions?
- Has the door been open for a long time or more frequent door openings occured?
- Are the internal louvers and fan guard openings obstructed?
- Has warm product been placed in the cabinet?

Problem: The refrigeration system runs for long periods of time
- Is the condenser area clean and free of obstructions?
- Have the doors been open for a long time or more frequent door openings occured?
- Has warm product been placed in the cabinet?
- On hot days and in warm room temperatures the system will run long

Problem: Condensation forms inside the refrigerated compartments
- This is normal during high humidity and frequent door openings
- Are the doors closing and sealing properly?

Problem: Condensation forms on the outside of the unit
- During periods of high humidity some condensation might appear on outside surfaces. The condensation will disappear when the humidity drops. Meanwhile, be sure doors are closing and sealing properly. If condensation persists, contact your Perlick Factory Authorized Service Center.

You need product information:
- Contact your selling dealer
- Inquire via the web at www.perlick.com
- Call (800) 558-5592 for factory assistance on planning, installation or product information.
- Write to: Perlick Corporation, Customer Service Department, 8300 West Good Hope Road, Milwaukee, WI 53223
- E-mail us at warrantyserv@perlick.com

You need product service:
- Check the model and serial number of your unit located on the label attached to the inside top of the cabinet. Then call your Perlick FactoryAuthorized Service Center. For the location of the Service Center in your area, contact your dealer, inquire via the web at www.perlick.com, call (800) 558-5592 for factory assistance on planning, installation or product information, write to: Perlick Corporation, Customer Service Department, 8300 West Good Hope Road, Milwaukee, WI 53223, e-mail us at warrantyserv@perlick.com.

You need replacement parts or accessories:
- Use only genuine Perlick replacement parts and accessories. Genuine Perlick parts and accessories are designed to work correctly with Perlick products and offer superior service life. The use of non-Perlick parts can damage the unit and may void the warranty
- Check the model and serial number of your unit located on the label attached to the inside top of the cabinet. Then call your Perlick Factory Authorized Service Center. For the location of the Service Center in your area, contact your dealer, inquire via the WEB at www.perlick.com, or write to: Perlick Corporation, Customer Service Department, 8300 W. Good Hope Rd, Milwaukee, WI 53223, call 800/558-5592 or e-mail us at warrantyserv@perlick.com

RESIDENTIAL PRODUCTS WARRANTY

1A. PERLICK RESIDENTIAL REFRIGERATION PRODUCTS LIMITED WARRANTY

(excludes H50IM Clear Ice Makers; see warranty on page 31)

ENTIRE PRODUCT - Full Three Year Warranty*:
For three (3) years from date of original purchase, Perlick Corporation's warranty covers all parts and labor to repair or replace any part of the product, which proves to be defective in material and workmanship.

ADDITIONAL - Fourth through Sixth Year Limited Parts Only Warranty:

During the three (3) years following expiration of the Three Year Warranty*, Perlick will supply replacement parts only for the hermetically sealed refrigeration system with consists of the compressor, condenser, drier, connecting tubing, evaporator and hot gas bypass valve.

**You must register your product within 90 days of purchase to receive the Full Three Year Warranty. Without registration, you will receive the standard Full Two Year Warranty with the additional Third through Sixth Year Limited Parts Only Warranty.*

TERMS:
The Perlick Warranty applies to products installed in the fifty United States, the District of Columbia or the ten provinces of Canada.

All service provided by Perlick Corporation under the above warranty must be performed by authorized Perlick service representatives, unless otherwise specified by Perlick.

Service will be provided in the home during normal business hours.

This warranty applies only to products installed for normal residential use, it does not include adjusting the controls, door reversal, light bulb or cleaning the condenser.

This warranty is extended only to the original purchaser of the Perlick product.

The above warranty does not apply if:
- Failure of product was due to transportation
- Product was: improperly installed, misused, abused, operating with low voltage, wiring not conforming to electrical codes, improperly maintained or modified.
- The original Bill of Sale, delivery date or serial number cannot be verified.
- Defective parts are not returned for inspection if so required by the Perlick Corporation.

To receive parts and or service and the name of the nearest Perlick authorized service representative, contact your Perlick dealer, distributor or Perlick Corporation's Customer Service Department; 8300 West Good Hope Road, Milwaukee Wisconsin, 53223; call 800 558-5592, E-mail us at warrantyserv@perlick.com , or visit our web: www.bringperlickhome.com.

This limited warranty is in lieu of any other warranty, expressed or implied, including, but not limited to any implied warranty of merchantability or fitness for a particular purpose; provided however, that to the extent required by law, implied warranties are included but do not extend beyond the duration of the express warranty first set above. Perlick's sole liability and your exclusive remedy under this warranty are set forth in the initial paragraph above. Perlick Corporation shall have no liability whatsoever for any incidental, consequential or special damages arising from the sale, use or installation of the product or from any other causes whatsoever, whether based on warranty(expressed or implied) or otherwise based on contract, tort or any other theory of liability.

Some states do not allow limitations on how long an implied warranty lasts or the exclusion or limitation of incidental or consequential damages, so the above limitations may not apply to you. This warranty gives you specific legal rights, and you may also have other rights, which vary, from state to state.

1B. PERLICK H50IM CLEAR ICE MAKER LIMITED WARRANTY

ENTIRE PRODUCT - Full One Year Warranty:

For one (1) year from date of original purchase, Perlick Corporation's warranty covers all parts and labor to repair or replace any part of the product, which proves to be defective in material and workmanship.

TERMS:

The Perlick Warranty applies to products installed in the fifty United States, the District of Columbia or the ten provinces of Canada.

All service provided by Perlick Corporation under the above warranty must be performed by authorized Perlick service representatives, unless otherwise specified by Perlick.

Service will be provided in the home during normal business hours.

This warranty applies only to products installed for normal residential use, it does not include adjusting the controls, door reversal, light bulb or cleaning the condenser.

This warranty is extended only to the original purchaser of the Perlick product.

The above warranty does not apply if:

- Failure of product was due to transportation
- Product was: improperly installed, misused, abused, operating with low voltage, wiring not conforming
- electrical codes, improperly maintained or modified.
- The original Bill of Sale, delivery date or serial number cannot be verified.
- Defective parts are not returned for inspection if so required by the Perlick Corporation.

To receive parts and or service and the name of the nearest Perlick authorized service representative, contact your Perlick dealer, distributor or Perlick Corporation's Customer Service Department; 8300 West Good Hope Road, Milwaukee Wisconsin, 53223; call 800 558-5592, E-mail us at warrantyserv@perlick.com , or visit our web: www.bringperlickhome.com.

This limited warranty is in lieu of any other warranty, expressed or implied, including, but not limited to any implied warranty of merchantability or fitness for a particular purpose; provided however, that to the extent required by law, implied warranties are included but do not extend beyond the duration of the express warranty first set above. Perlick's sole liability and your exclusive remedy under this warranty are set forth in the initial paragraph above. Perlick Corporation shall have no liability whatsoever for any incidental, consequential or special damages arising from the sale, use or installation of the product or from any other causes whatsoever, whether based on warranty (expressed or implied) or otherwise based on contract, tort or any other theory of liability.

Some states do not allow limitations on how long an implied warranty lasts or the exclusion or limitation of incidental or consequential damages, so the above limitations may not apply to you. This warranty gives you specific legal rights, and you may also have other rights, which vary, from state to state.

8300 West Good Hope Road • Milwaukee, WI 53223 •
Toll Free 800.558.5592 • Fax 414.353.7069 • www.bringperlickhome.com

Perlick®