PK7500EJ

Profile™ Series 27" Built-In Double Convection Wall Oven

DIMENSIONS AND INSTALLATION INFORMATION (IN INCHES)

MOST 30" WALL CABINETS CAN BE USED WITH THIS UNIT.

NOTE: These ovens are not approved for stackable installations. Cabinets installed adjacent to wall ovens must have an adhesion spec of at least a 194°F temperature rating.

Door handle protrudes 3" from door face. Cabinets and drawers on adjacent 45° and 90° walls should be placed to avoid interference with the handle.

Electric wall ovens are not approved for installation with a plug and receptacle. They must be hard wired in accordance with installation instructions.

INSTALLATION INFORMATION: Before installing, consult installation instructions packed with product for current dimensional data.

Side-by-side installations require at least 2" between cutouts.

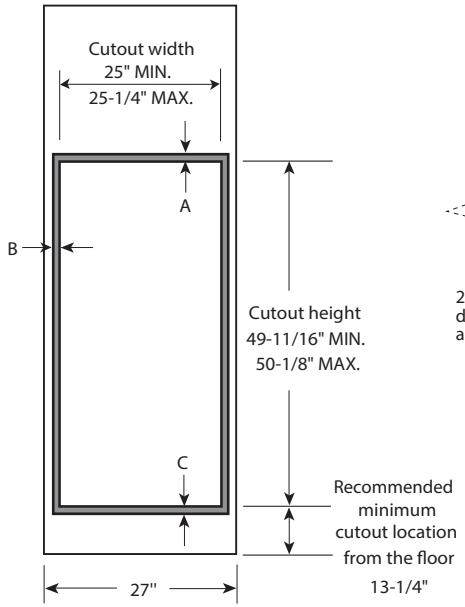

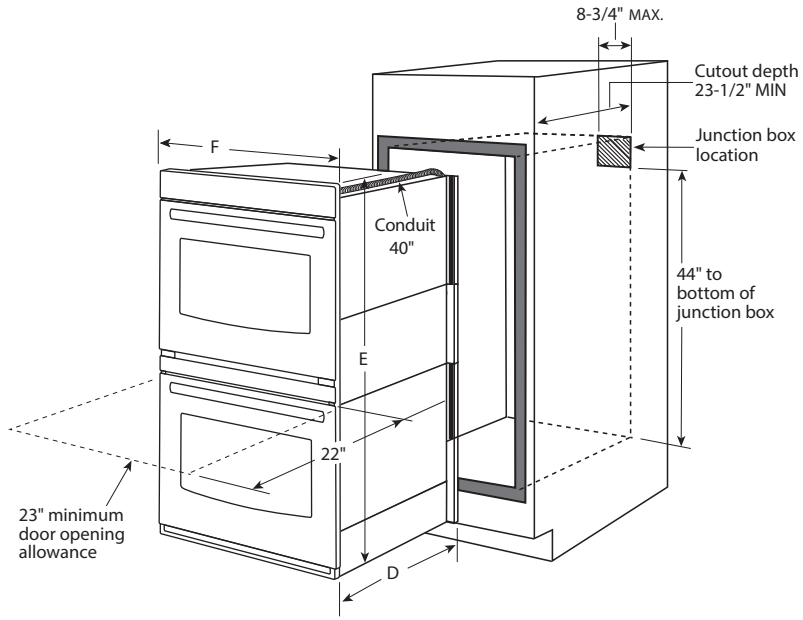

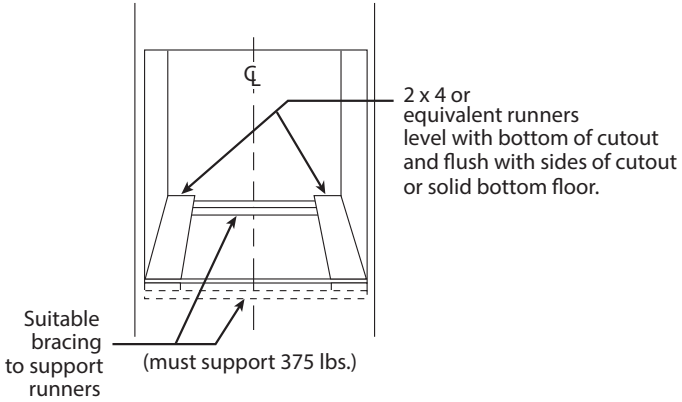

KW RATING	
240V	7.2
208V	5.4
BREAKER SIZE	
240V	30 Amps
208V	30 Amps

	PK7500
Cabinet	27"
A – Overlap of oven at top of cutout	1"
B – Overlap of oven over side of edges of cutout	1"
C – Overlap of oven at bottom of cutout	1"
Oven	
D – Install depth	23-1/2"
E – Overall height with trim	51-1/8"
F – Overall width	26-3/4"

Dimension and installation information are shown in inches.

GE APPLIANCES

For answers to your Monogram, GE Café™ Series, GE Profile™ Series or GE Appliances product questions, visit our website at geappliances.com or call GE Answer Center® Service, 800.626.2000.

GE FITS!

Listed by Underwriters Laboratories

Specification Revised 4/16

PK7500EJ

Profile™ Series 27" Built-In Double Convection Wall Oven

FEATURES AND BENEFITS

True European Convection (upper oven) – Achieve delicious results from a third heating element and fan combination

WiFi Connect – Wirelessly control oven functions from your smartphone

Ten-pass bake element – Even baking is assured with heat that covers more surface area

Eight-pass broil element – Get full broil coverage and even browning from edge to edge

Self-clean heavy-duty roller rack – Easily access items with racks that glide smoothly

Halogen interior oven lighting – Easily see how your food is baking

Self-clean with steam clean option (both ovens) – Clean your oven the way you want

Glass touch controls – Set temperatures quickly and clean with little effort

Double oven 8.6 cu. ft. total oven capacity (4.3 cu. ft. both ovens) – Large meals are easy with capacity that fits more at one time

Black gloss oven interior – Enjoy a clean and sleek appearance

Model PK7500EJES – Slate

GUARANTEED FIT

Replacing a similar wall oven from GE or another brand? GE wall ovens are guaranteed for an exact fit to make replacement easy

Visit geappliances.com for more info

GE APPLIANCES