Product and Cut-out Dimensions
Plate Warmer and Coffee System
EGW 4062-14 & CVA406X

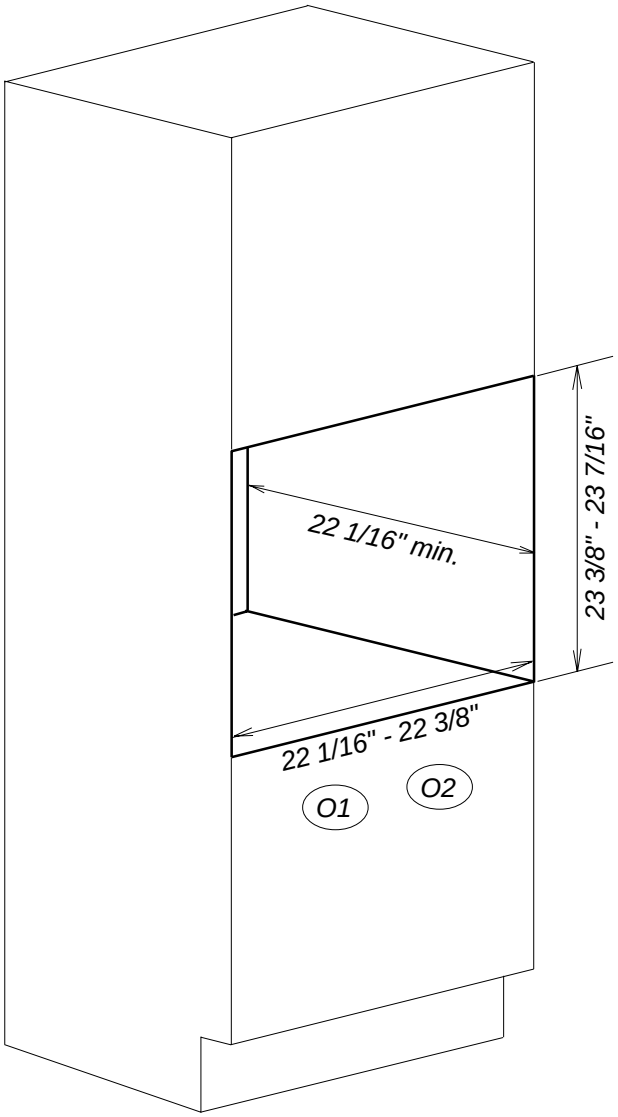

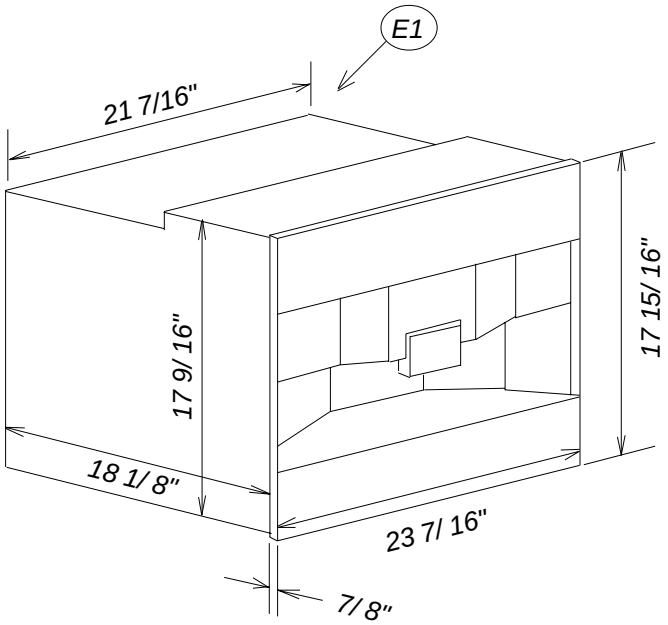

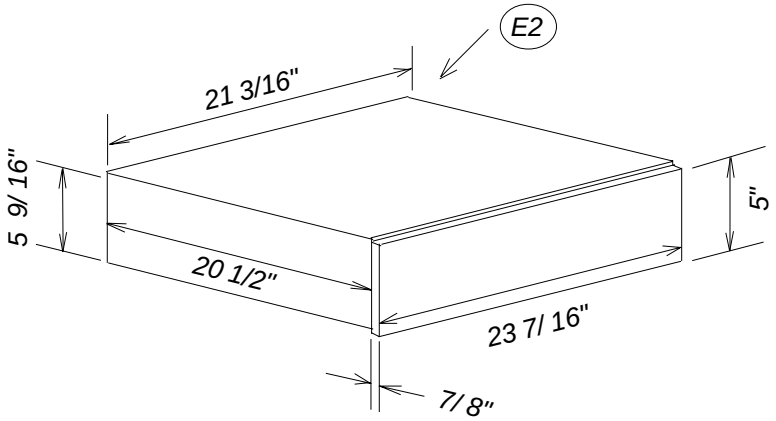

Location Codes
E1 - Plugged electrical main connects left back side (NEMA 5-15P). *O1 - Standard 110 Volt - 15 Amp outlet. Location must be accessible.* *E2- Plugged electrical main connects left back side (NEMA 5-15P)* *02 - Standard 110 Volt - 15 Amp outlet. Location must be accessible.*
Notes
• *All installations must be done in accordance with local codes.*

NOTE: Drawing is not to scale.
SPECIFICATION SHEETS 010409

Product Dimension Details
Plate Warmer and Coffee System
EGW 4062-14 & CVA406X

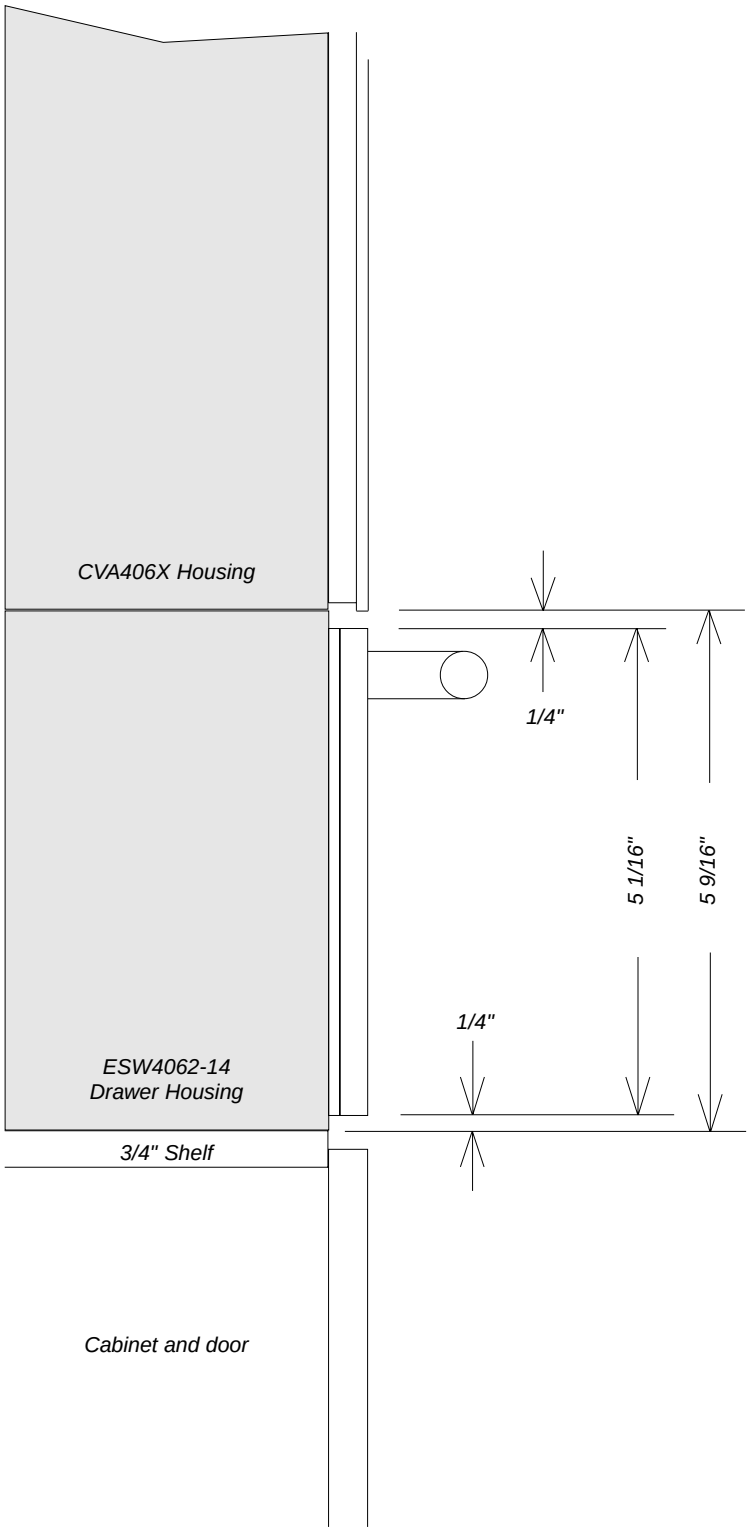

NOTE: Drawing is not to scale.
SPECIFICATION SHEETS 010409

Product and Cut-out Dimensions
Plate Warmer and Steam Oven
EGW 4062-14 & DG40X2

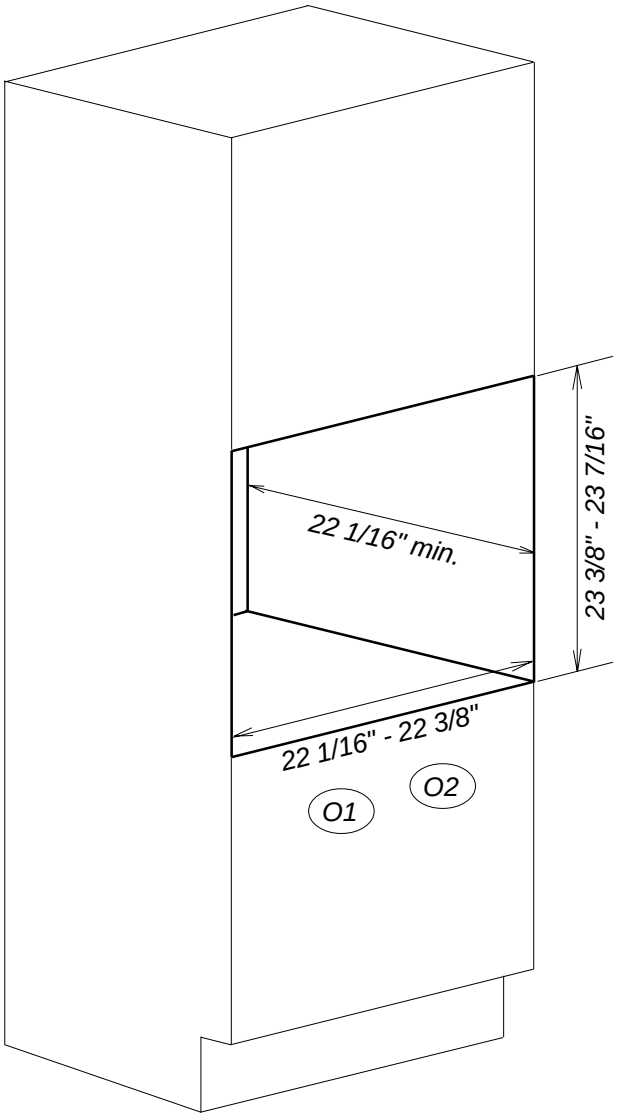

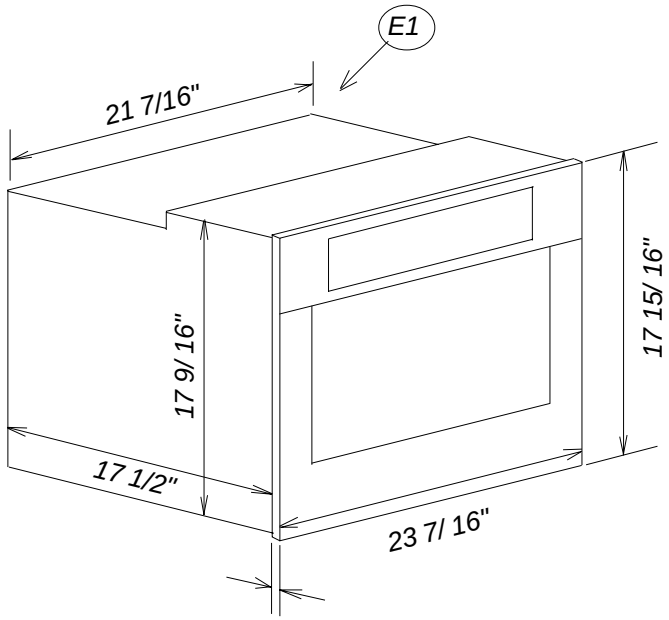

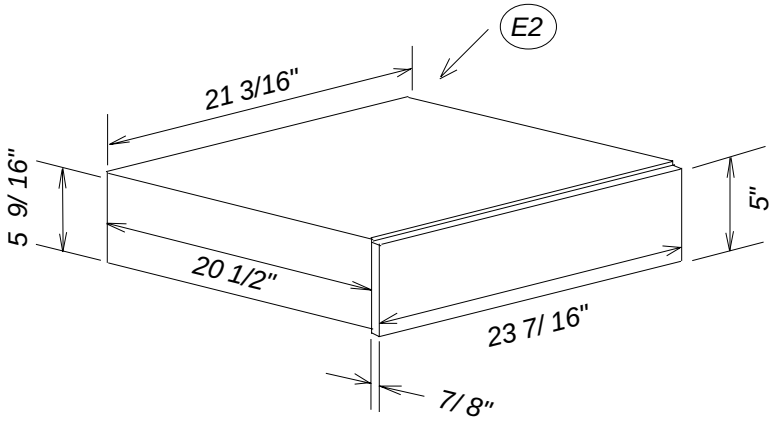

Location Codes
E1 - 5 foot electrical main with plug connects top center. *O1 - 208-240 Volt - 15 Amp - 3-wire connection box with NEMA 6-15R. Location must be accessible.* *E2- 5 foot - 120 Volt - 15 Amp 3-wire molded plug connects left upper rear.* *02 - Standard NEMA 5-15R outlet. Location must be accessible.*
Notes
• *All installations must be done in accordance with local codes.*

NOTE: Drawing is not to scale.
SPECIFICATION SHEETS 010409

Product Dimension Details
Plate Warmer and Steam Oven
EGW 4062-14 & DG4082

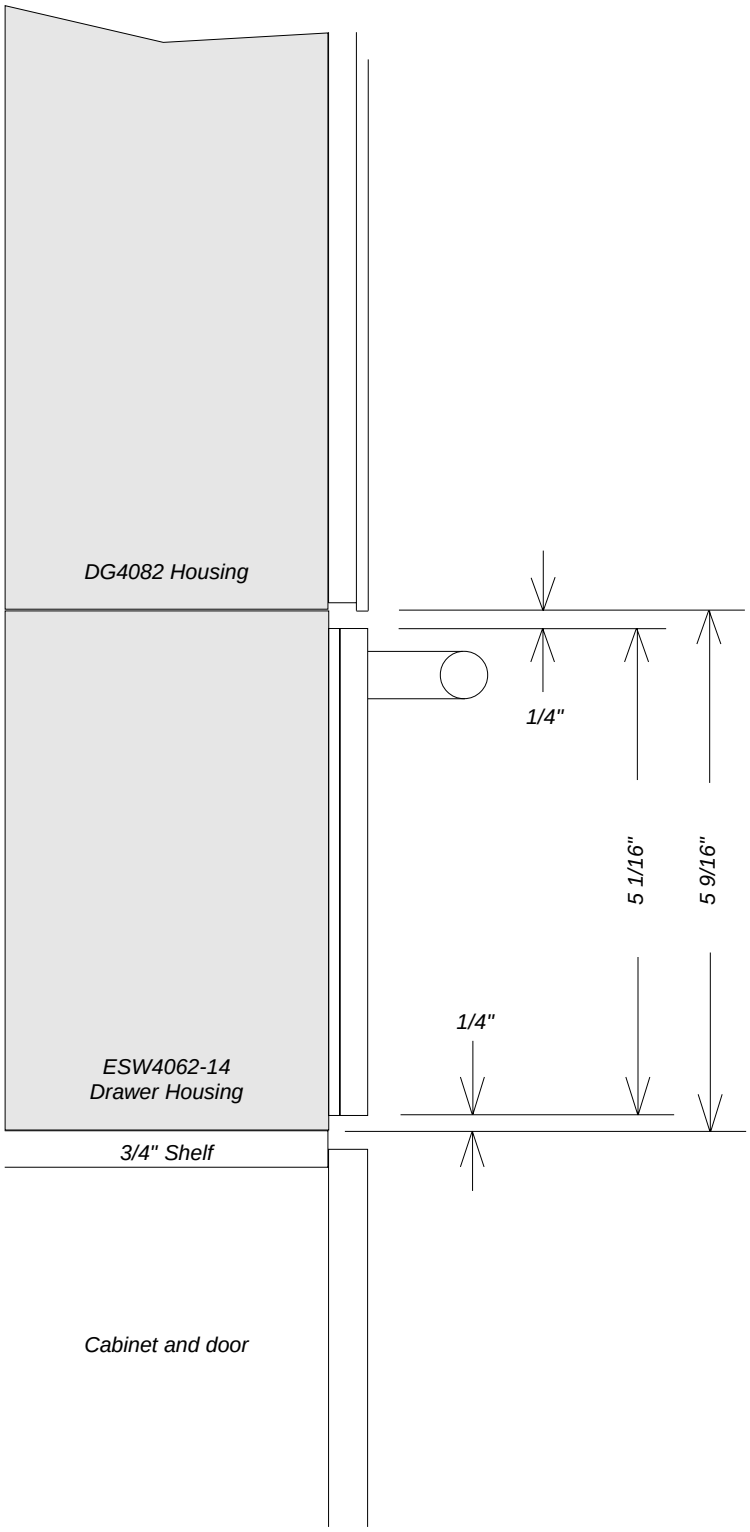

NOTE: Drawing is not to scale.
SPECIFICATION SHEETS 010409

Product and Cut-out Dimensions
Plate Warmer and Speed Oven
EGW 4062-14 & H40X2BM

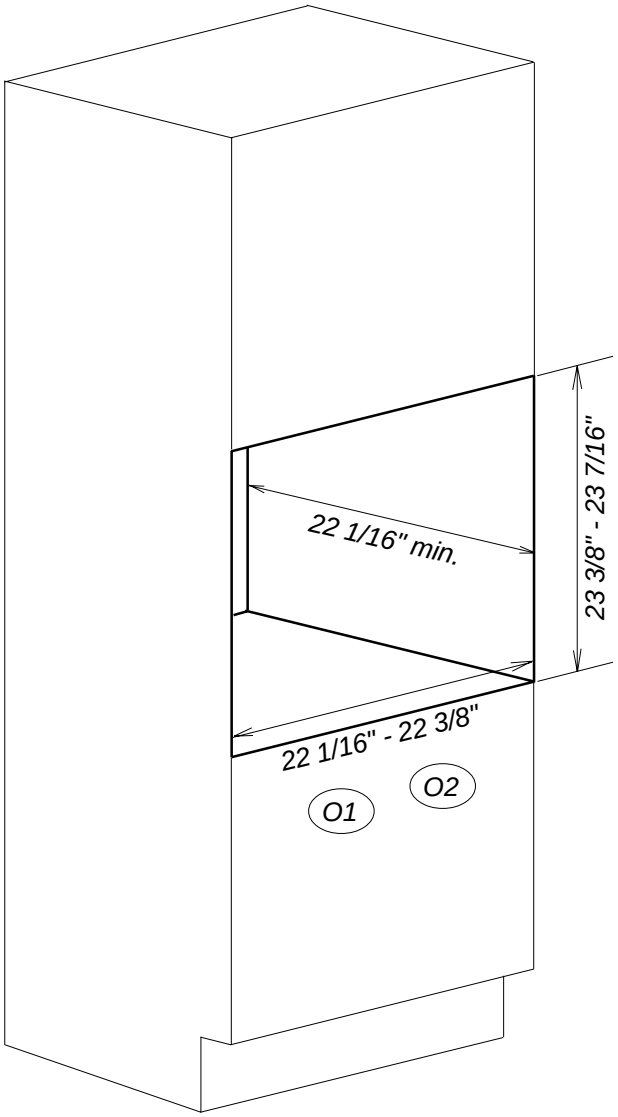

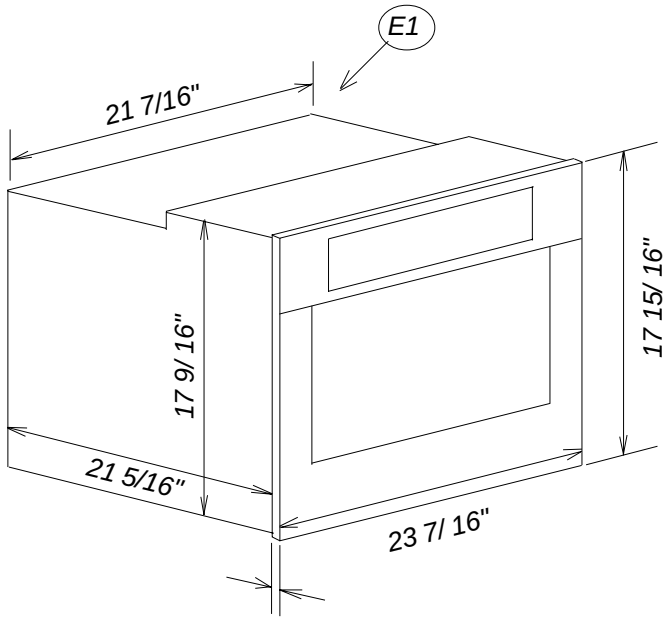

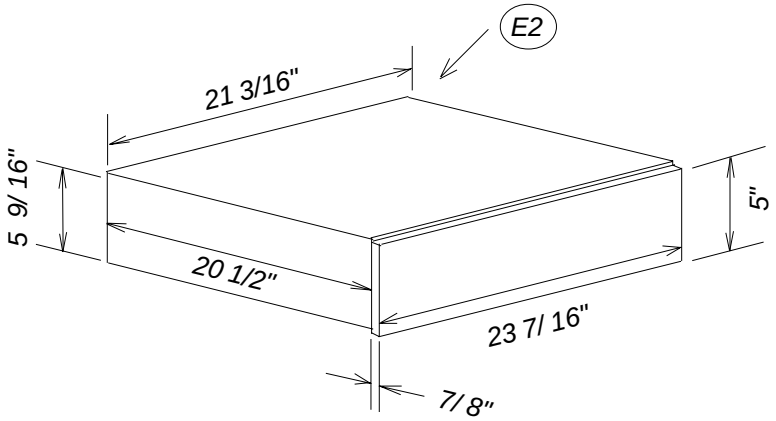

Location Codes
E1 - 5 foot electrical main with plug connects top center. O1 - 208-240 Volt - 20 Amp - 4-wire connection box with NEMA 14-30R. Location must be accessible. E2- 5 foot - 120 Volt - 15 Amp 3-wire molded plug connects left upper rear. 02 - Standard NEMA 5-15 outlet. Location must be accessible.
Notes
• All installations must be done in accordance with local codes.

NOTE: Drawing is not to scale.
SPECIFICATION SHEETS 010409

Product Dimension Details
Plate Warmer and Speed Oven
EGW 4062-14 & H40X2BM

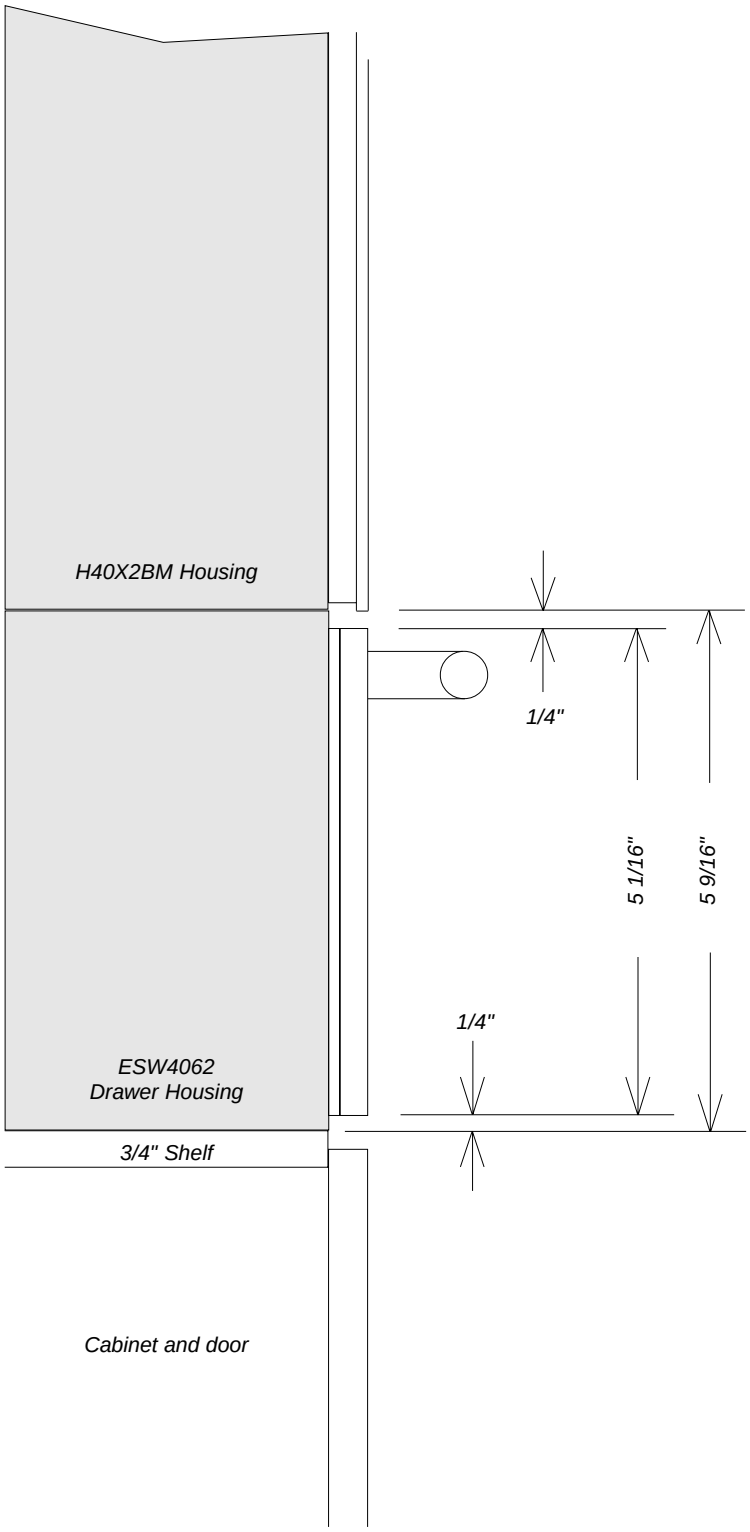

NOTE: Drawing is not to scale.
SPECIFICATION SHEETS 010409