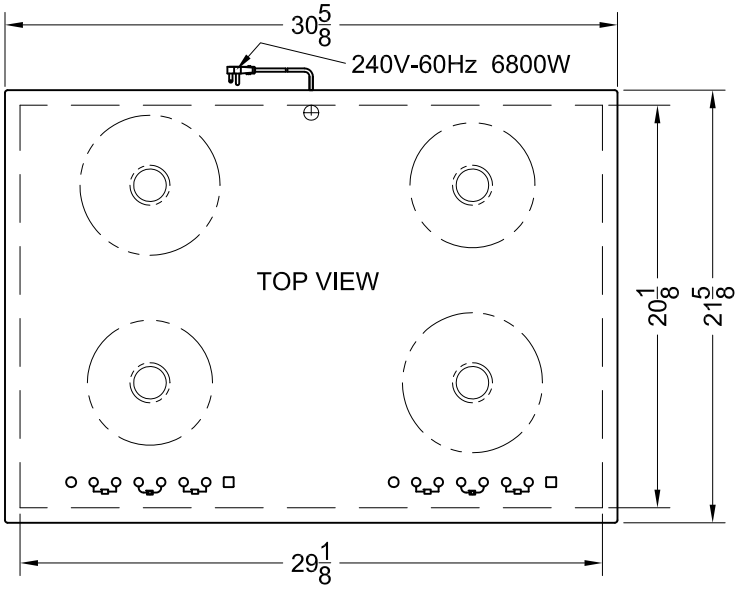

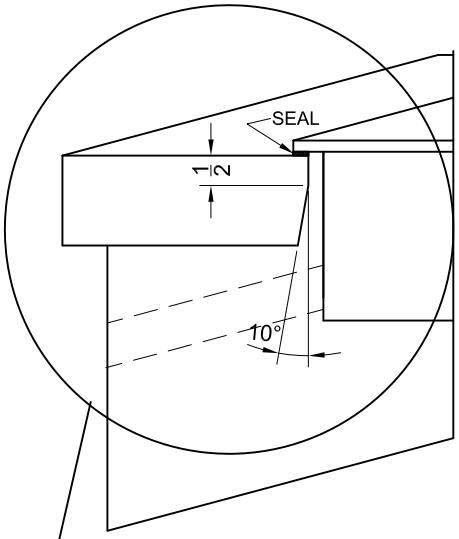

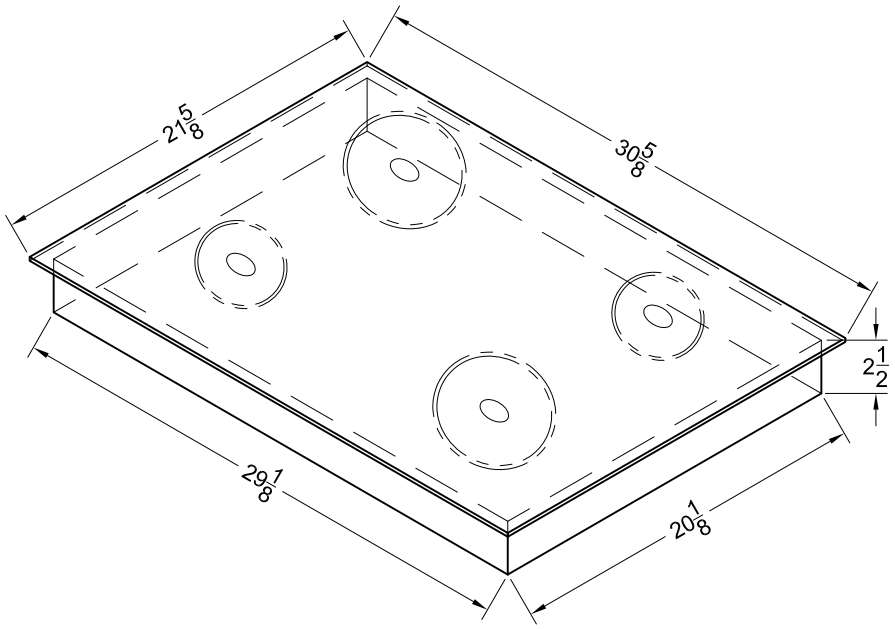

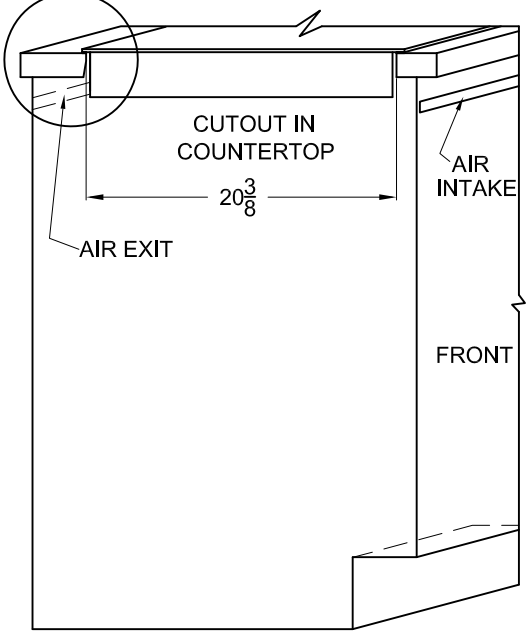

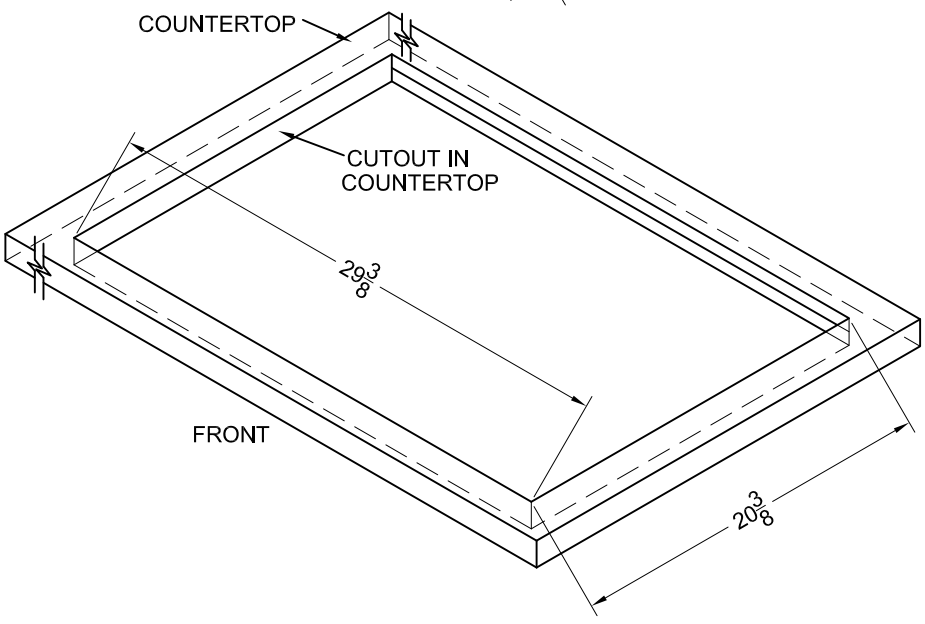

MODEL No. SINC430220

TYPE:
INDUCTION COOKER

SUMMIT
SPECIALTY MAJOR APPLIANCES

FELIX STORCH INC
www.summitappliance.com
(718) 893-3900

DATE: DEC./27/08