COMPACT METAL LINER SLOPED SIDES *Wall Model*

MODEL	SIZE	MATERIAL
CMLSS-29-SS-3	29 13/16"	BRUSHED SS
CMLSS-38-SS-3	38 7/16"	BRUSHED SS
CMLSS-47-SS-3	47 7/16"	BRUSHED SS
CMLSS-29-SS-6	29 13/16"	BRUSHED SS
CMLSS-38-SS-6	38 7/16"	BRUSHED SS
CMLSS-47-SS-6	47 7/16"	BRUSHED SS

POWER-PACK

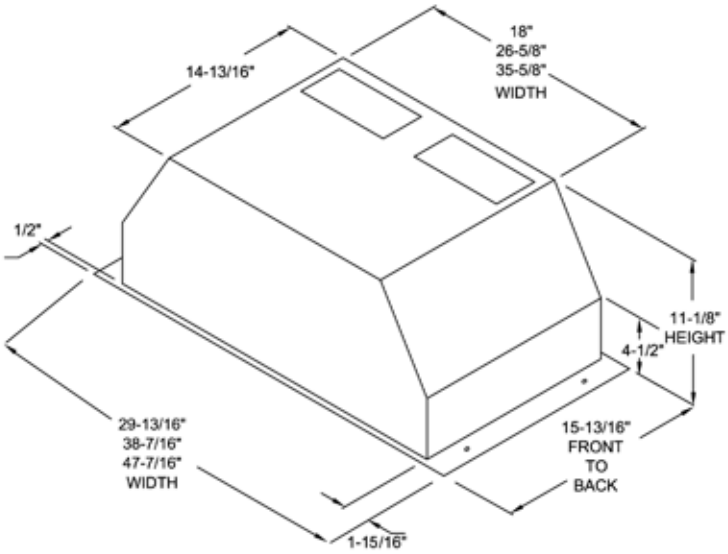

- SEAMED CONSTRUCTION
- 3-SPEED CONTROL
- 50 WATT BULBS
  AMBIENT & BRILLIANT-BULBS INCLUDED
- HIGH HEAT SENSOR
- MESH FILTERS-ANODIZED
  ALUMINUM
- ENCLOSED LINER - STAINLESS STEEL
- 20 GAUGE MATERIAL
- 8" SQUARE-TO-ROUND TRANSITION WITH BACKDRAFT DAMPER
- **TOP DISCHARGE ONLY**

CMLSS 29" 38" 47"		
CFM 300 IN-HOOD FAN	6" TRANSITION	(FAN INCLUDED)
CFM 600 IN-HOOD FAN	8" TRANSITION	(FAN INCLUDED)
CFMR 600 REMOTE FAN	8" TRANSITION	(FAN PURCHASED SEPARATELY)
ALL TRANSITIONS ARE SQUARE-TO-ROUND AND INCLUDE BACKDRAFT DAMPERS AT NO ADDITIONAL CHARGE.		