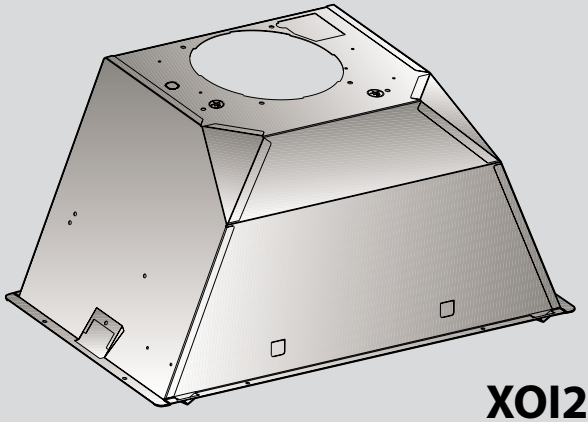

XOI27S

NEED HELP?
Call our ventilation experts toll free al 800-966-8300
AVEZ-VOUS BESOIN D'AIDE ?
Contactez nos experts au numéro gratuit 800-966-8300
¿NECESITA AYUDA?
Póngase en contacto con nuestros expertos a través del número gratis 800-966-8300

USA **RANGE HOOD** - User instructions

F **HOTTE DE CUISINE** - Notice d'utilisation

E **CAMPANA EXTRACTORA** - Manual de utilización

XO Hood Warranty

Proof of original purchase date and invoice is needed to obtain service under warranty.

What is covered

Limited 2 Year Warranty.

For 2 years from the original date of purchase, we will provide, free of charge, parts and service labor in your home to repair or replace any part of the hood that fails because of a manufacturing defect.

The warranty is extended to the original purchaser for products purchased for ordinary home use in North America.

Should you require service for your XO product call a product service specialist at **800.966.8300**

What is not covered

Improper Installation.
Service trips to the home to teach you how to use the product.
Resetting circuit breakers.
Damage caused after delivery.

EXPECT MORE FROM XO

When buying any XO appliance
you can be confident
you have purchased a high quality,
innovative, and stylish product,
from a company who cares about you

2 YEAR
PARTS & LABOR
WARRANTY

- **IMPORTANT SAFETY INSTRUCTIONS**

- **FOR RESIDENTIAL USE ONLY**

- **READ AND SAVE THESE INSTRUCTIONS**
- **PLEASE READ ENTIRE INSTRUCTIONS BEFORE PROCEEDING.**
- **IMPORTANT**: Save these Instructions for the Local Electrical Inspectors use.
- **INSTALLER**: Please leave these Instructions with this unit for the owner.
- **OWNER**: Please retain these instructions for future reference.

- Take care when using cleaning agents or detergents.
- Suitable for use in household cooking area

- **WARNING** - To reduce the risk of fire or electric shock, do not use this fan with any Solid-State Speed Control Device.

- **CAUTION** - To reduce risk of fire and to properly exhaust air, be sure to duct air outside – Do not vent exhaust air into spaces within walls or ceilings or into attics, crawl spaces, or garages.

- **CAUTION** - For general ventilating use only. Do not use to exhaust hazardous or explosive materials and vapors.

- **CAUTION** - To avoid motor bearing damage and noisy and/or unbalanced impellers, keep drywall spray, construction dust, etc. off power unit.

- **CAUTION** - Please read specification label on product for further information and requirements.

- **WARNING** – TO REDUCE THE RISK OF FIRE, ELECTRIC SHOCK, OR INJURY TO PERSONS, OBSERVE THE FOLLOWING:

A. Use this unit only in the manner intended by the manufacturer. If you have questions, contact the manufacturer.

B. Before servicing or cleaning unit, switch power off at service panel and lock the service disconnecting means to prevent power from being switched on accidentally. When the service disconnecting means cannot be locked, securely fasten a prominent warning device, such as a tag, to the service panel.

- **WARNING - TO REDUCE THE RISK OF A RANGE TOP GREASE FIRE:**

A. Never leave surface units unattended at high settings. Boilovers cause smoking and greasy spillovers that may ignite. Heat oils slowly on low or medium settings.

B. Always turn hood ON when cooking at high heat or when flambeing foods (i.e.

Crepes Suzette, Cherries Jubilee, Peppercorn Beef Flambè).

C. Clean ventilating fans frequently. Grease should not be allowed to accumulate on fan or filter.

D. Use proper pan size. Always use cookware appropriate for the size of the surface element.

E. Keep fan, filters and grease laden surface clean.

F. Use high range setting on range only when necessary.Heat oil slowly on low to medium setting.

G. Don't leave range unattended when cooking.

H. Always use cookware and utensils appropriate for the type and amount off food being prepared.

■ **WARNING** – TO REDUCE THE RISK OF INJURY TO PERSONS IN THE EVENT OF A RANGE TOP GREASE FIRE, OBSERVE THE FOLLOWING[a]:

A. SMOTHER FLAMES with a close-fitting lid, cookie sheet, or metal tray, then turn off the burner. BE CAREFUL TO PREVENT BURNS. If the flames do not go out immediately, EVACUATE AND CALL THE FIRE DEPARTMENT.

B. NEVER PICK UP A FLAMING PAN – You may be burned.

C. DO NOT USE WATER, including wet dishcloths or towels – a violent steam explosion will result.

D. Use an extinguisher ONLY if:

1. You know you have a Class ABC extinguisher, and you already know how to operate it.

2. The fire is small and contained in the area where it started.

3. The fire department is being called.

4. You can fight the fire with your back to an exit.

[a]Based on "kitchen firesafety tips" published by NFPA

Proper maintenance of the Range Hood will assure proper performance of the unit.

■ INSTALLATION INSTRUCTIONS

WARNING – TO REDUCE THE RISK OF FIRE, ELECTRIC SHOCK, OR INJURY TO PERSONS, OBSERVE THE FOLLOWING:

A. Installation work and electrical wiring must be done by qualified person(s) in accord ance with all applicable codes and standards, including fire-rated construction.

B. Sufficient air is needed for proper combustion and exhausting of gases through the flue (chimney) of fuel burning equipment to prevent back drafting. Follow the heating equipment manufacturer's guideline and safety standards such as those published by the National Fire Protection Association (NFPA), and the American Society for Heating, Refrigeration and Air Conditioning Engineers (ASHRAE), and the local code authorities.

C. When cutting or drilling into wall or ceiling, do not damage electrical wiring and other hidden utilities.

D. Ducted fans must always be vented to the outdoors.

E. This unit must be grounded.

■ **WARNING** - TO REDUCE THE RISK OF FIRE, USE ONLY METAL DUCTWORK.

■ **WARNING** - UNDER CERTAIN CIRCUMSTANCES DOMESTIC APPLIANCES MAY BE DANGEROUS.

A. Do not check filters with hood working.
B. Do not touch the lamps after a prolonged use of the appliance.
C. No food must be cooked flambè underneath the hood.
D. The use of an unprotected flame is dangerous for the filters and could cause fires.
E. Watch constantly the fried food in order to avoid the cooking oil flares up.
F. Before performing any mainteinance operation, disconnect the hood from the electrical service.

■ The manufacturers will not to accept any responsability for eventual damages, because of failure to observe the above instructions.

DUCT FITTINGS:

This Hood Must Use an 6" Round Duct. It Can Transition to 3-1/4" x 10" or 3-1/4" x 12" Duct.

Use this chart to compute maximum permissible lengths for duct runs to outdoors.

NOTE: *Do not exceed maximum permissible equivalent lengths!*

Maximum duct length: 100 feet for range hoods.

Flexible ducting:
If flexible metal ducting is used, all the equivalent feet values in the table should be doubled. The flexible metal duct should be straight and smooth and extended as much as possible.

DO NOT use flexible plastic ducting.

NOTE: *Any home ventilation system, such as a ventilation hood, may interrupt the proper flow of combustion air and exhaust required by fireplaces, gas furnaces, gas water heaters and other naturally vented systems. To minimize the chance of interruption of such naturally vented systems, follow the heating equipment manufacturer's guidelines and safety standards such as those published by NFPA.*

Duct Piece:	Dimensions:	Equivalent Number Length*:	Quantity Used:	Total Equivalent Length:
	Round, straight	1 ft. (per foot lenhgth)		
	3-1/4" x 10" straight	1 ft. (per foot lenhgth)		
	90° elbow	12 ft.		
	45° elbow	7 ft.		
	3-1/4" x 10" 3-1/4" x 12" 90° elbow	14 ft. 10 ft.		
	3-1/4" x 10" 3-1/4" x 12" 45° elbow	8 ft. 6 ft.		
	3-1/4" x 10" 3-1/4" x 12" 90° elbow	33 ft. 24 ft.		
	6" round to rectangular	2 ft.		
	Rectangular to 8" round	2 ft.		
	3-1/4" x 10" 3-1/4" x 12" 6" round to rectangular transition 90° elbow	4 ft. 4 ft.		
	3-1/4" x 10" 3-1/4" x 12" Rectangular to 6" transition 90° elbow	4 ft. 4 ft.		
	Round wall cap with dramper	24 ft.		
	3-1/4" x 10" 3-1/4" x 12" Rectangular wall cap with dramper	24 ft. 18 ft.		
	Round roof cap	33 ft.		
*Actual length of straight duct plus duct fitting equivalent. Equivalent length of duct pieces reflect requirements for good venting performance with any ventilation hood.			Total Duct Run =	

■ WARNING FIRE HAZARD

NEVER exhaust air or terminate duct work into spaces between walls, crawl spaces, ceiling, attics or garages.
All exhaust must be ducted to the outside, unless using the recirculating option.

Use single wall rigid Metal ductwork only.

Fasten all connections with sheet metal screws and tape all joints w/ certified Silver Tape or Duct Tape.

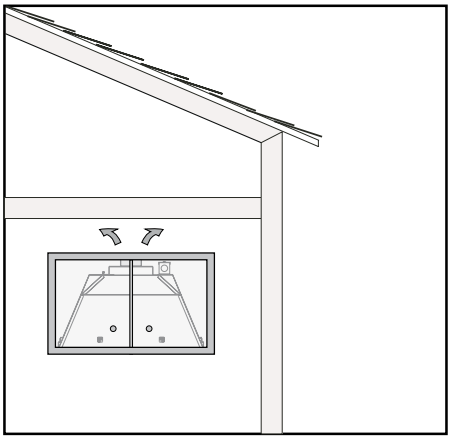

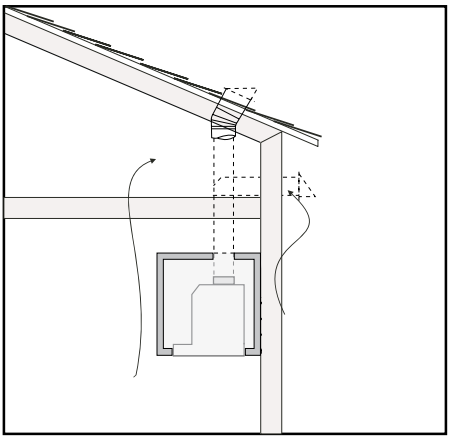

INSTALL THE DUCTWORK:

NOTE: To reduce the risk of fire, use only metal ductwork.

1. Decide where the ductwork will run between the hood and the outside.
2. A straight, short duct run will allow the hood to perform most efficiently.
3. Long duct runs, elbows, and transitions will reduce the performance of the hood. Use as few of them as possible.
4. Install a roof or wall cap. Connect 6" round metal ductwork to cap and work back towards hood location. Use duct tape to seal the joints between ductwork sections.

PRODUCT DIMENSIONS AND CLEARANCE XOI27S:

› Front of hood

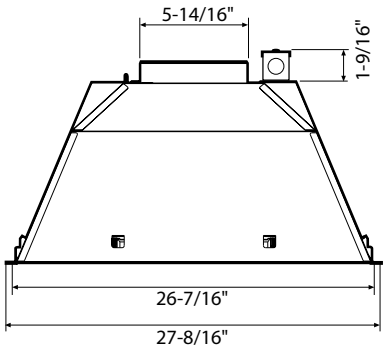

› Side of hood

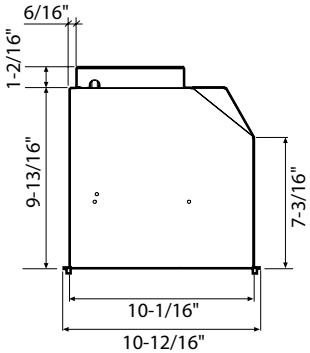

› Top of hood

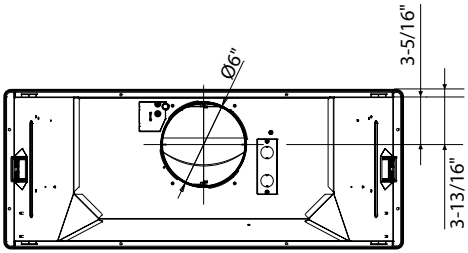

› Mounting height and clearance:

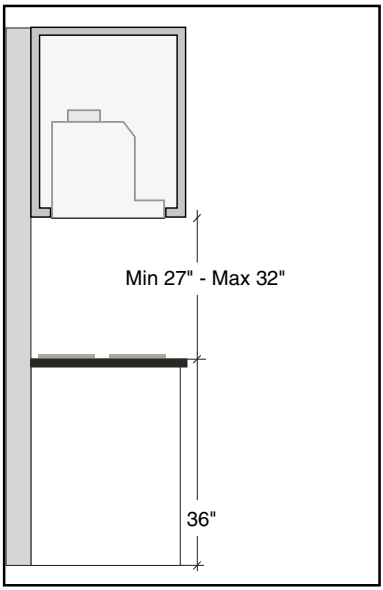

INSTALLATION INSTRUCTIONS
INSTALLATION - VENTED TO THE OUTSIDE

1. FIXING THE HOOD TO THE LOWER PART OF THE WALL CABINET:

This type of appliance must be fitted inside a cabinet or inside another type of support structure. The overall measurements of the range hood are given in **figure 1-2.** Before proceeding with range hood installation, remove grille **D** by pressing the two side buttons **A**, as shown in **figure 3.**

Fix the appliance in place using 8 screws (not supplied) which are suited to the type of cabinet. To install the range hood correctly, first fit the 4 screws **A** and then the 4 screws **B**, in accordance with the diagram in **figure 4.** After fixing the range hood to the lower part of the cabinet, place grille **D (Fig.4)** back in the correct position. During this procedure, make sure that grille **D** is fastened properly.

The appliance expels the fumes through an outside wall or a duct. It is necessary to buy a telescopic pipe in accordance with the standards in use (inflammable) and connect it to flange **H (Fig.5).**

IMPORTANT - The range hood must be secured to wall studs or use drywall anchors capable of supporting 75 lbs.

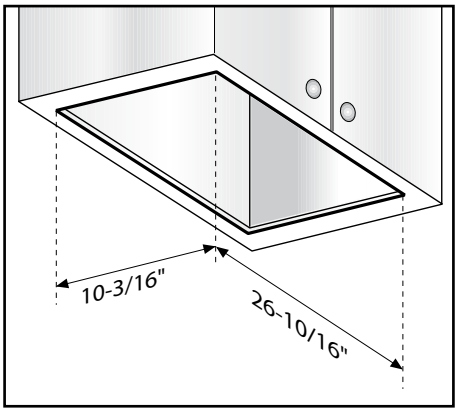

Fig.1

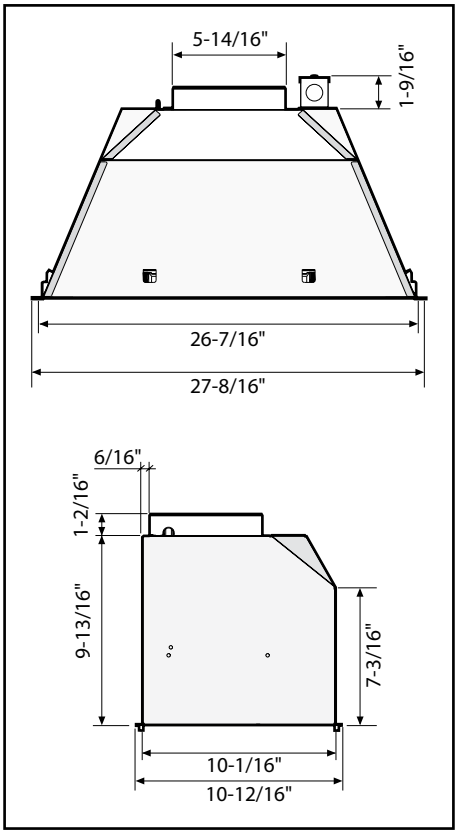

Fig.2

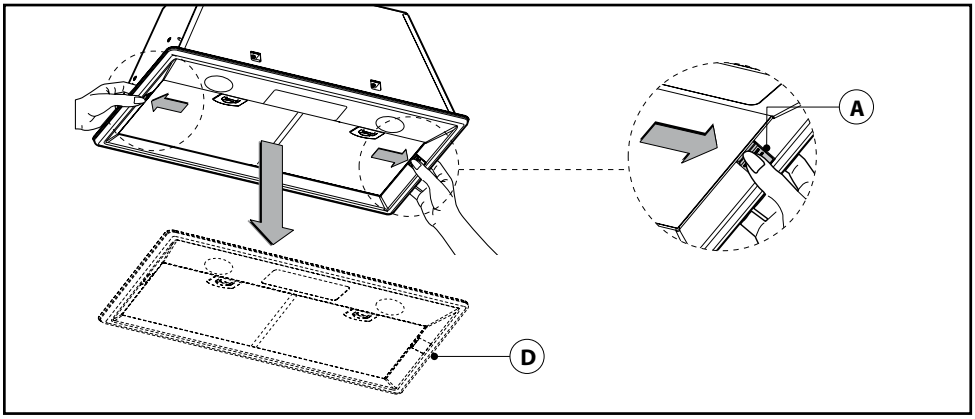

Fig.3

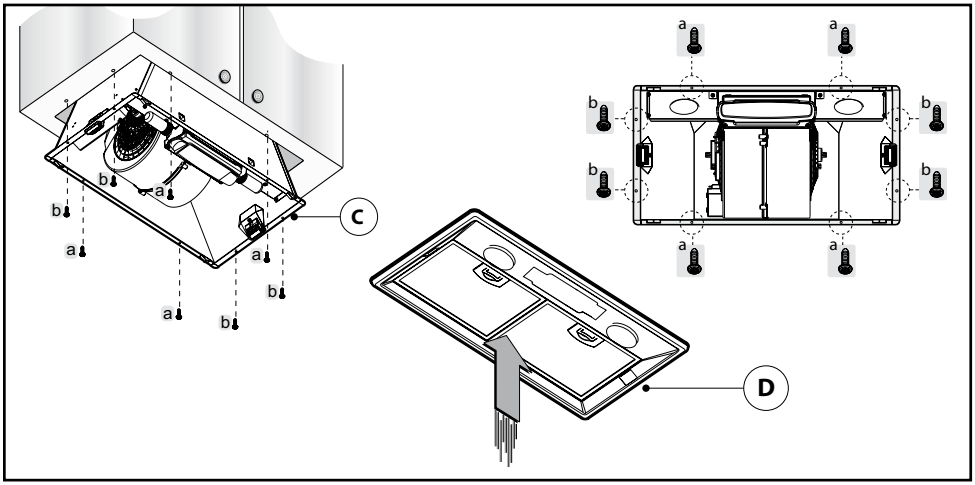

Fig.4

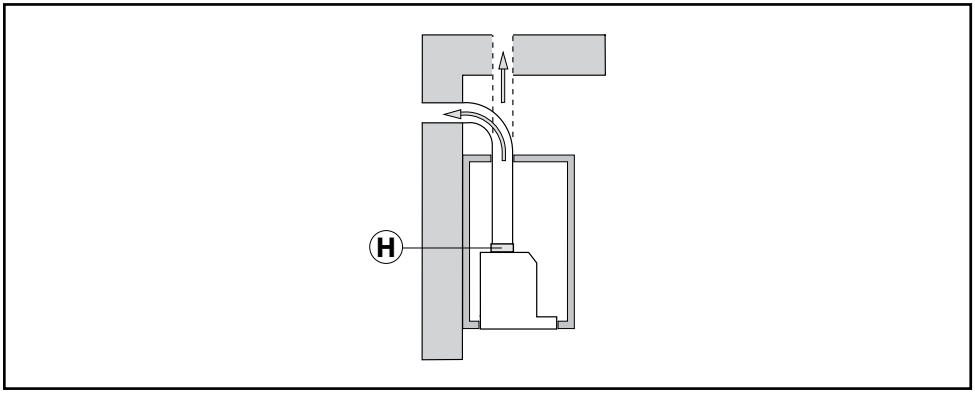

Fig.5

POWER SUPPLY:

IMPORTANT – (Please read carefully)

⚠ WARNING:

FOR PERSONAL SAFETY, THIS APPLIANCE MUST BE PROPERLY GROUNDED.

Remove house fuse or open circuit breaker before beginning installation. Do not use an extension cord or adapter plug with this appliance. Follow National electrical codes or prevailing local codes and ordinances.

Electrical supply:
These vent hoods must be supplied with 120V, 60Hz, and connected to an individual, properly grounded branch circuit, and protected by a 15 or 20 amp circuit breaker or time delay fuse.

- Wiring must be 2 wire with ground.
- If the electrical supply does not meet the above requirements, call a licensed electrician before proceeding.
- Route house wiring as close to the installation location as possible, in the ceiling or back wall. Refer to Wiring Locations on page 12.
- Connect the hood wiring to the house wiring in accordance with local codes.

Grounding instructions:
The grounding conductor must be connected to a grounded metal, permanent wiring system, or an equipment-grounding terminal or lead on the hood.

⚠ **WARNING:** The improper connection of the equipment-grounding conductor can result in a risk of electric shock. Check with a qualified electrician or service representative if you are in doubt whether the appliance is properly grounded.

2. CONNECT ELECTRICAL:

- **Power Supply Connection:**

For connection to the power supply refer to the follows **Fig.6:**

BLACK = **L** line
WHITE = **N** neutral
GREEN / YELLOW = **G** ground

- A double-pole switch properly rated must be installed to provide the range hood power supply disconnection.
- Connect the electrical conduit to the Field Wiring Compartment using listed conduit fittings.
- Carry out the power supply connection in accordance with the national electric code, ANSI/NFPA 70-1999.

5. Insert the wires into the box, then close the box cover, securing it using the screws that were previously removed.

The appliance should be installed at a minimum height of 27" up to a maximum height of 32" for optimal performance. If a connection ductwork composed of two parts is used, the upper part must be placed outside the lower part. Do not connect the range hood exhaust duct air to the same duct air used to exhaust hot air or fumes from other appliances other than electrical.

- In the **FILTERING** version it is necessary to apply a metal air exhaust tube **M (Fig.7)**, with a minimum length of 15", connected to the flange of the collector. It must be positioned vertically and fastened to a specific opening made on the top part of the cabinet.

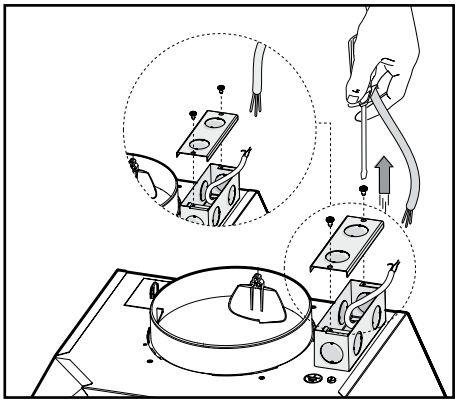

Fig.6

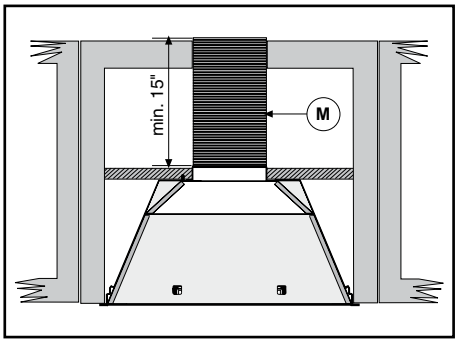

Fig.7

3. CONNECT THE DUCTWORK:

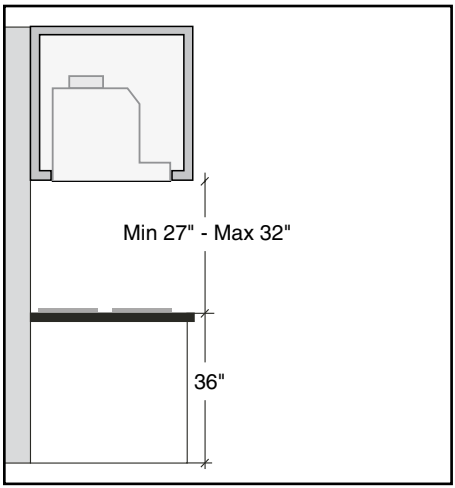

DUCTLESS RECIRCULATING OPTION:

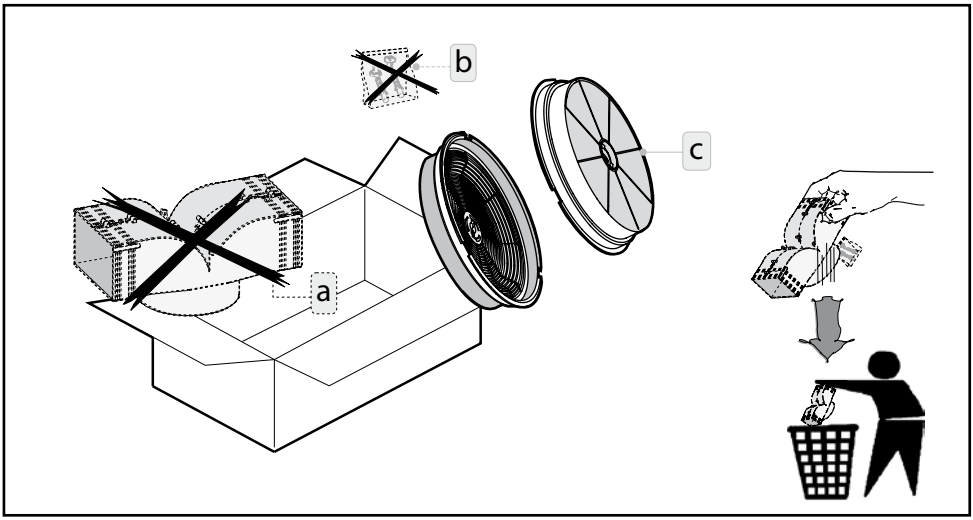

CARBON FILTER KIT XORFK04: The kit includes an air diverter **A**, 2 screws and 2 expansions plugs **B** and 2 round filters **C**. To convert this model from the sunction to the filtering version, it is not necessary to use the air deviator **A** and the screws **B.**

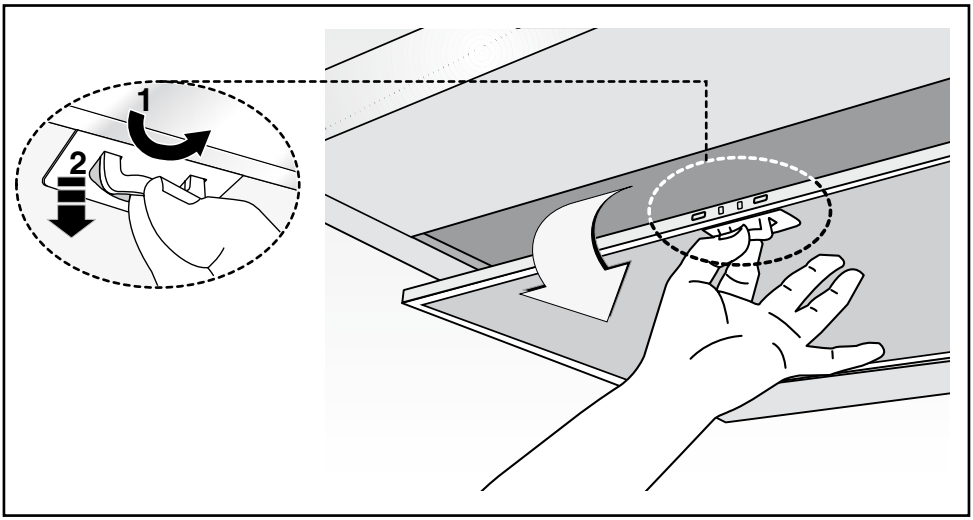

Fig.1: Remove the aluminum panels by pulling the lever **1** out and pushing downwards **2**.

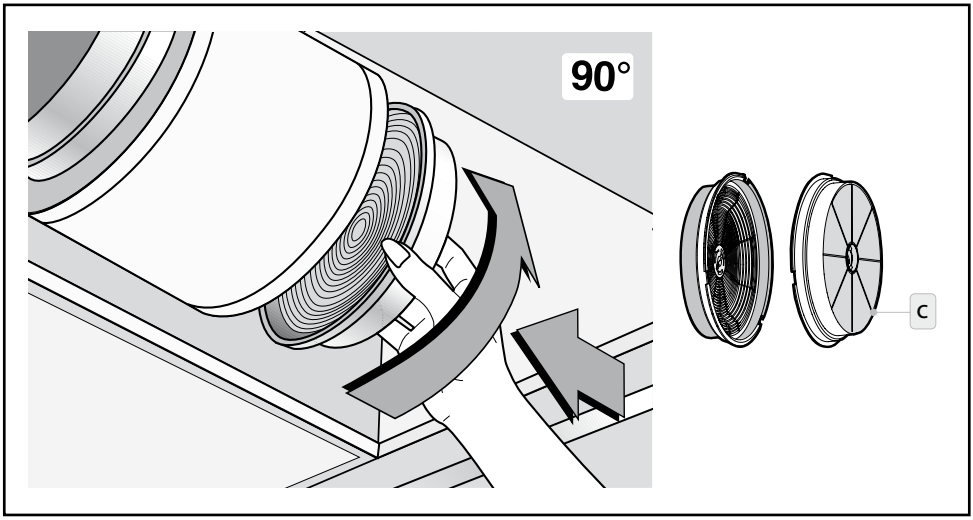

Fig.2: The filters **C** must be applied to the suction unit inside the hood, centering them inside of it and turning them 90° until they snap into place.

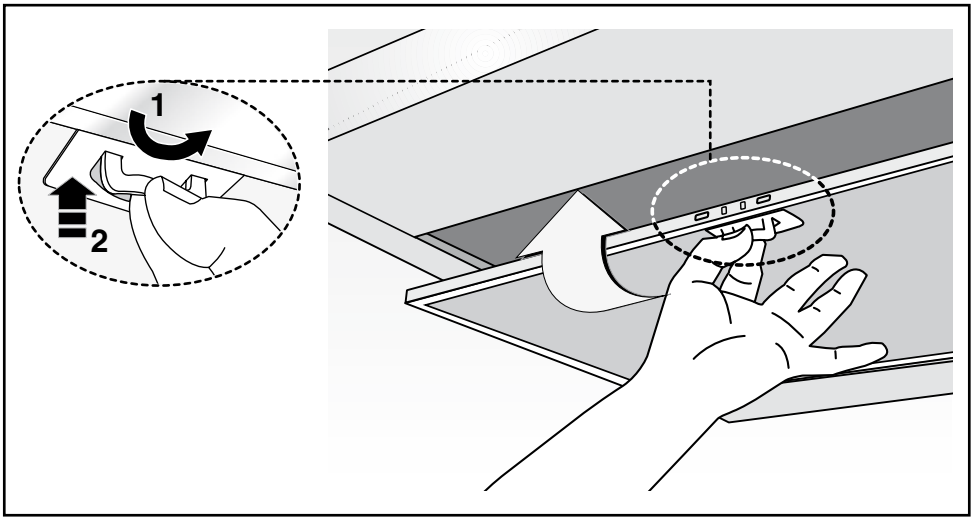

Fig.3: Put the aluminum panels back in place **(Fig.1)**.

■ USE

• **If the apparatus is equipped with the following controls:**

A = LIGHT
B = OFF
C = SPEED I
D = SPEED II
E = SPEED III
G = MOTOR WORKING indicator.

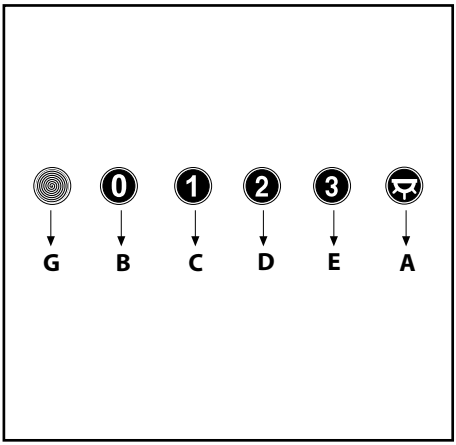

■ MAINTENANCE

• We recommend that the range hood is switched on before any food is cooked. We also recommend that the appliance is left running for 15 minutes after the food is cooked, in order to thoroughly eliminate all contaminated air.

The effective performance of the range hood depends on constant maintenance; the anti-grease filter and the active carbon filter both require special attention.

• **The anti-grease filter** is used to trap any grease particles suspended in the air, therefore is subject to saturation (the time it takes for the filter to become saturated depends on the way in which the appliance is used). The grease filters should be cleaned frequently. Use a warm detergent solution. Grease filters are a dishwasher safe.

- To prevent potential fire hazards, the anti-grease filters should be washed a minimum of every 2 months (it is possible to use the dishwasher for this task).

- After a few washes, the colour of the filters may change. This does not mean they have to be replaced.

If the replacement and washing instructions are not followed, the anti-grease filters may present a fire hazard.

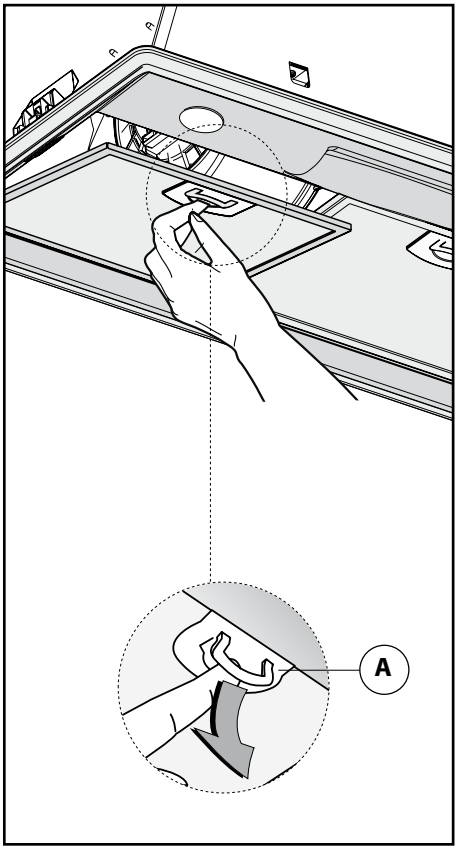

Fig.8

• **The active carbon filters** are used to purify the air which is released back into the room. The filters are not washable or re-usable and must be replaced at least once every four months. The active carbon filter saturation level depends on the frequency with which the appliance is used, the type of cooking performed and the regularity with which the anti-grease filters are cleaned.

• Clean the range hood frequently, both inside and outside, using a cloth which has been dampened with denatured alcohol or neutral, **non**-abrasive liquid detergents.

• The light on the range hood is designed for use during cooking and not for general room illumination. Extended use of the light reduces the average duration of the bulb.

• **Hood Cleaning:**

Stainless steel is one of the easiest materilas to keep clean. Occasional care will help preserve its fine appearance.

Cleaning tips:

- Hot water with soap or detergent is all that is usually needed.
- Follow all cleaningby rising with clear water. Wipe dry with a clean, soft cloth to avoid

water marks.
- For discolorations or deposit that persist, use a non-scratching household cleanser or stainless steel polishing powder with a little water and a soft cloth.
- For stubborn cases, use a plastic scouring pad or soft bristle brush together with cleaser and water. Rub lightly in direction of polishing lines or "grain" of the stainless finish. Avoid using too much pressure wich may mar the surface.
- **DO NOT** allow deposit to remain for long periods of time.
- **DO NOT** use ordinary steel wool or steel brushes. Small bits of steel may adhere to the surface causing rust.
- **DO NOT** allow salt solutions, disinfectants, bleaches, or cleaning compounds to remain in contact with stainless steel for extended periods. Many of these compounds contain chemicals with may be harmful. Rinse with water after exposure and wipe dry with a clean cloth.

Painted surfaces should be cleaned with warm water and mild detergent only.

- **Replacing the aluminum panels:**

To replace the aluminium panels, simply pull handle **A** as shown in **Fig.8.**

■ FUSE

• The halogen lamps circuit is controlled by a fuse 5x20 mm, 125V 5A. In case of necessity it can be replaced only by specialized personnel.

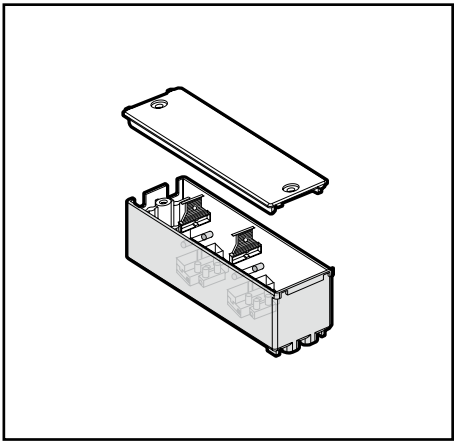

• **Replacing halogen light bulbs:**
To replace the halogen lamps **B**, from the inside of the cooker hood press downwards with two fingers as shown in **Fig.9.**

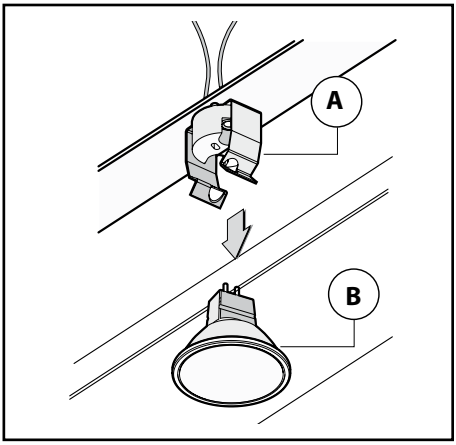

Fig.9

XOI27S:

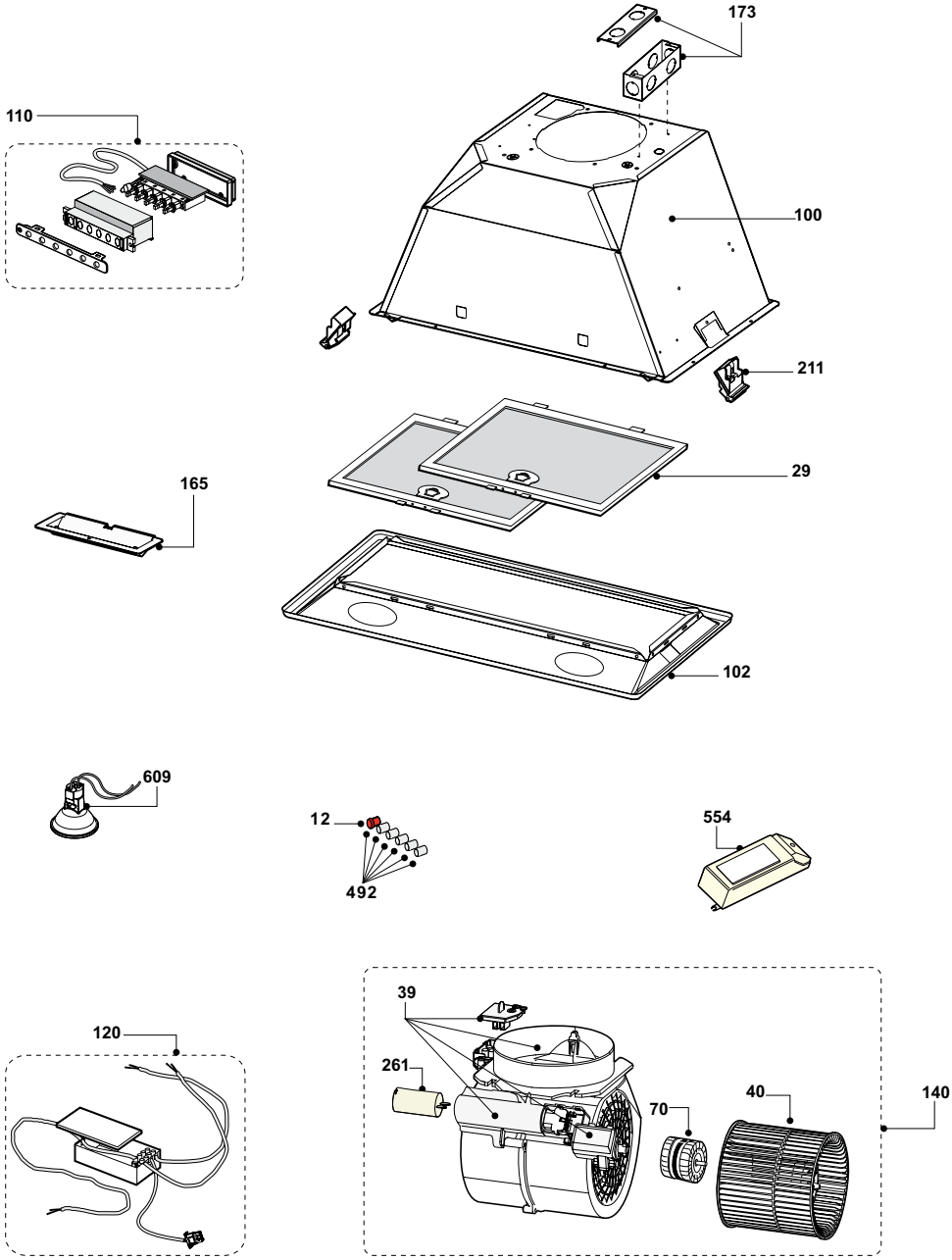

OPTIONS AND ACCESSORIES:

Model XORFK04 Ductless Recirculating Filter Kit.

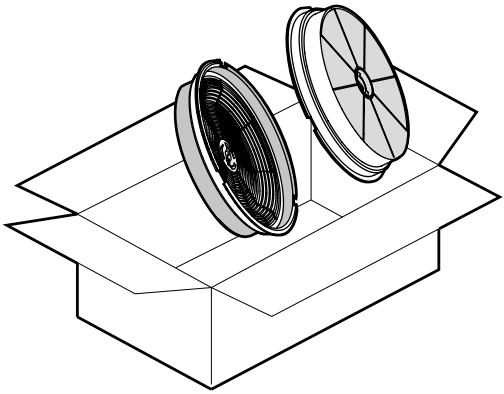

INSTALLATION PREPARATION:

Check installation hardware:
Locate the hardware package packed with the hood and check contents.

TYPE		DESCRIPTION	N°
A	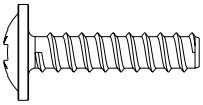	1/8" x 1/2"	8

Aluminum filter
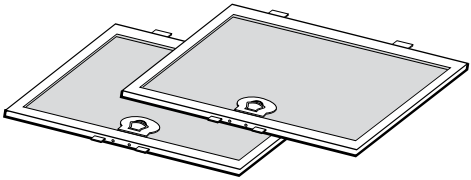

XOI Spec Sheet

Model: XOI27S

Sizes: 27-3/4" **Depth:** 11"

Features and Benefits:

- 600 CFM high velocity blower optimally removes Smoke, Grease and Odors.
- 3 speed push button controls.
- Two 50W Halogen Lights - Provide brilliant illumination over the cooking surface.
- Aluminum Mesh Filters - Trap airborne smoke and grease particles. They can be easily be removed for dishwasher-safe cleaning.
- Unit Dimensions: 27-3/4" W x 11" D x 10" T
  Cut Out Dims: 26-7/16" W x 10-1/16" D.
- Mounting Height from cooking surface 27"-32".

Duct Options and Electrical Requirements:

- 6 inch duct required.
- Ductless Option for applications where no ducting in available.
- AC 120v-60Hz (4.35amp).

Options:

- Optional recirculating kit if outside venting is unavailable.
  Model: XORFK04

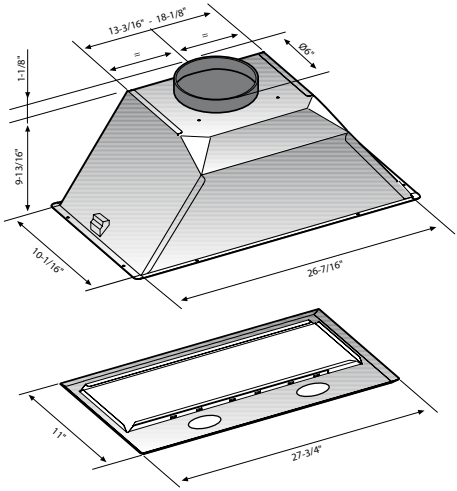

www.xoappliace.com

XO is Exclusively Distributed by:
Eastern Marketing Corp 24 Eisenhower Parkway Roseland,
New Jersey 07068 800-966-8300
www.easternmarketingcorp.com

DESIGNED & CRAFTED IN ITALY