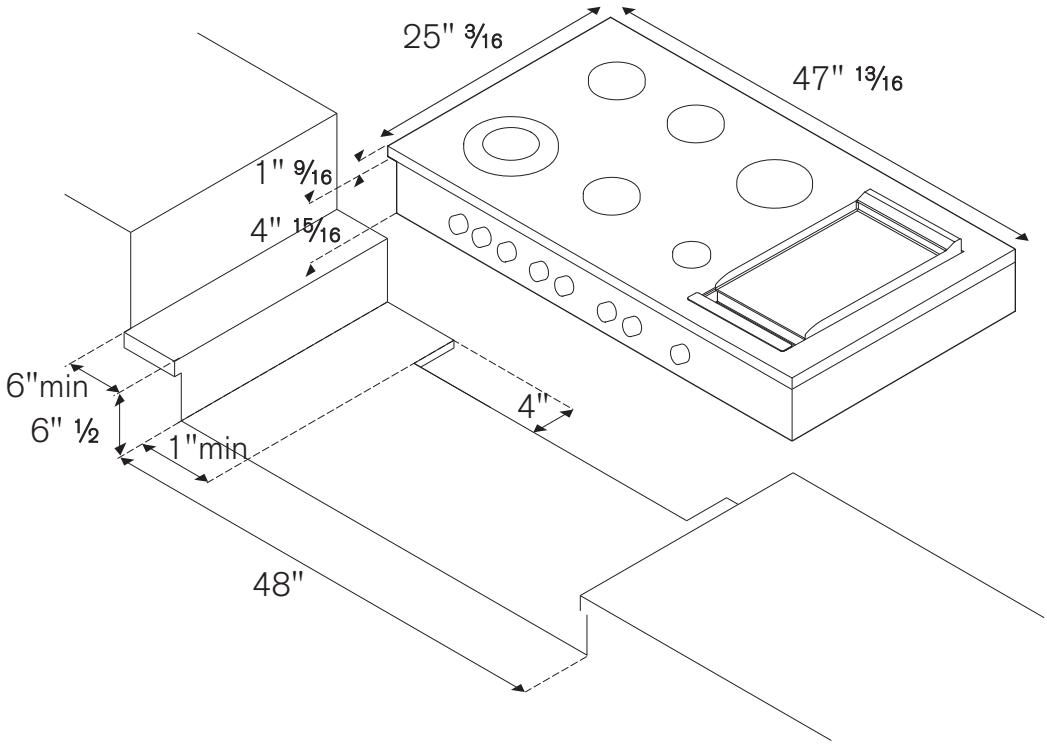
25" 3/16
47" 13/16
1" 9/16
4" 15/16
6"min
6" ½
1"min
4"
48"

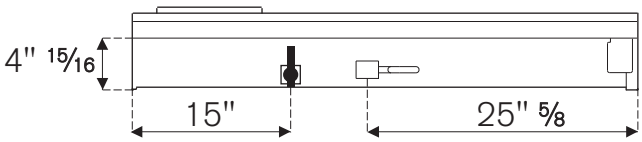
4" 15/16
15"
25" 5/8

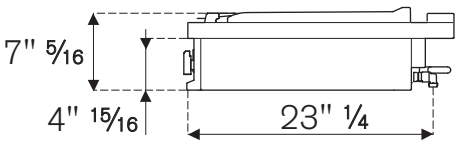
7" 5/16
4" 15/16
23" ¼