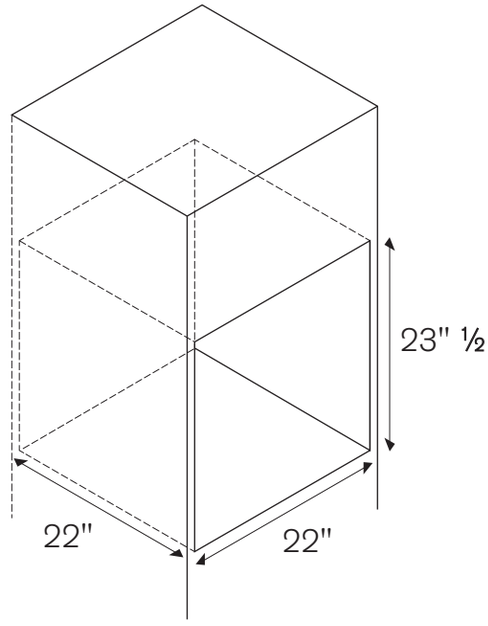
23" ½
22"
22"

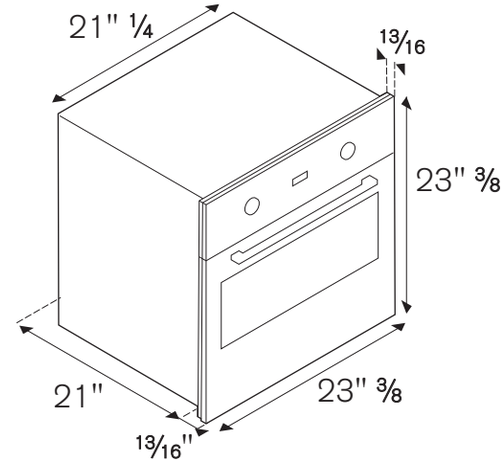
21" ¼
13/16
23" 3/8
21"
23" 3/8
13/16"

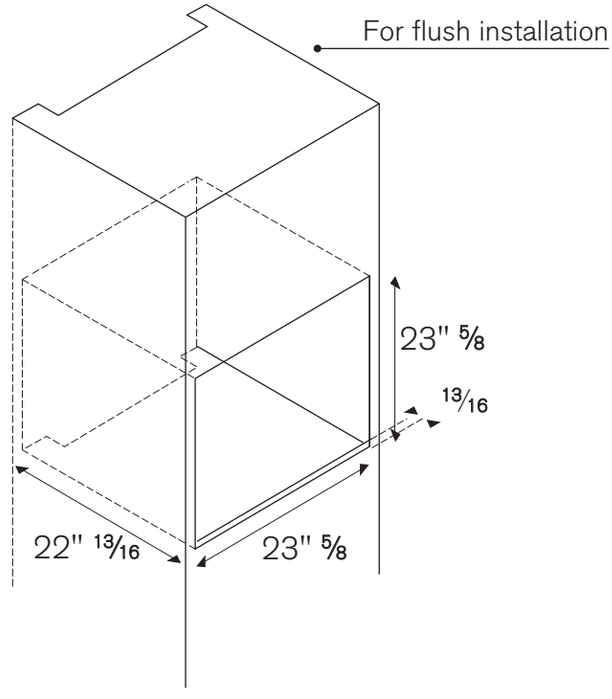
For flush installation
23" 5/8
13/16
22" 13/16
23" 5/8