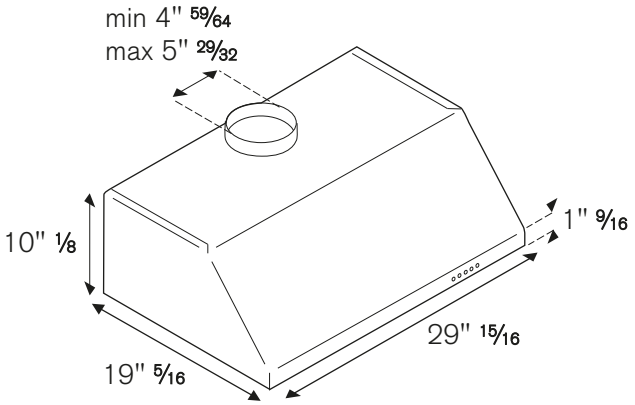
min 4" 59/64
max 5" 29/32
10" 1/8
1" 9/16
29" 15/16
19" 5/16

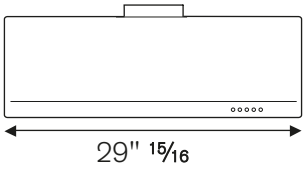
29" 15/16

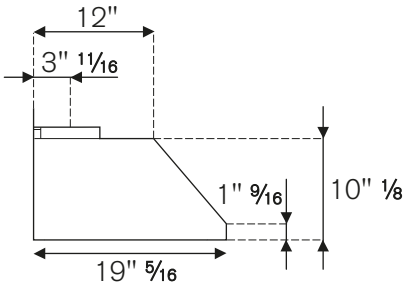
12"
3" 11/16
1" 9/16
10" 1/8
19" 5/16