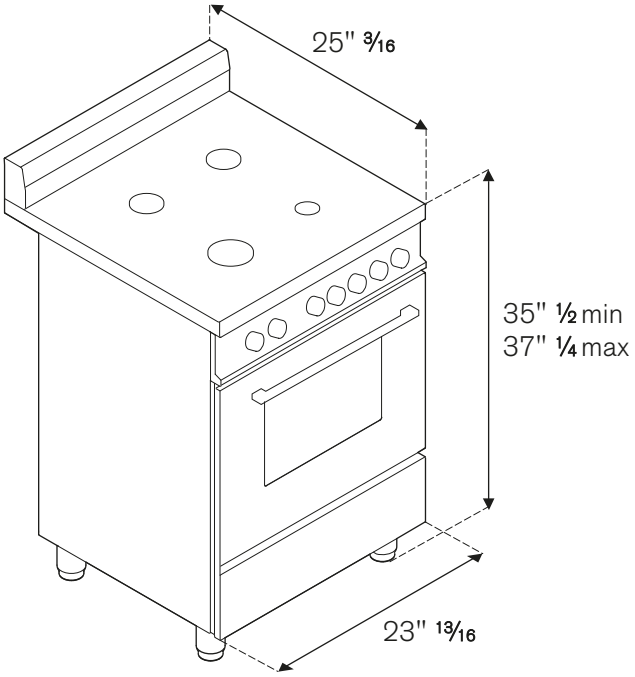
25" 3/16
35" 1/2 min
37" 1/4 max
23" 13/16

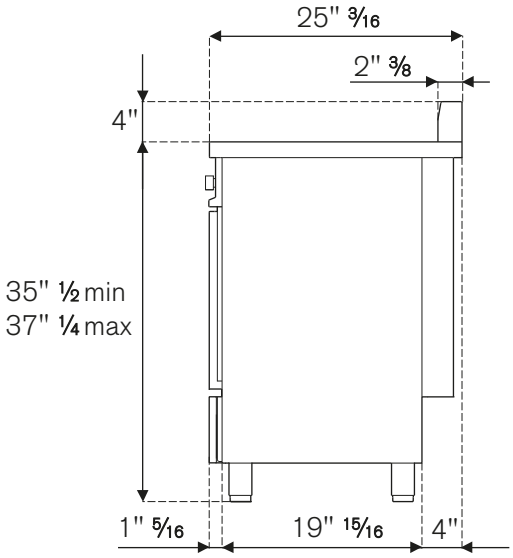
25" 3/16
2" 3/8
4"
35" 1/2 min
37" 1/4 max
1" 5/16
19" 15/16
4"

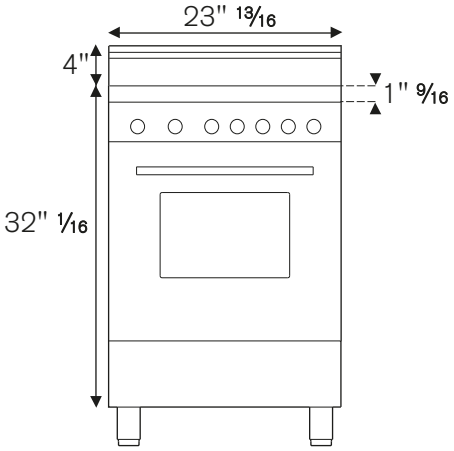
23" 13/16
4"
1" 9/16
32" 1/16

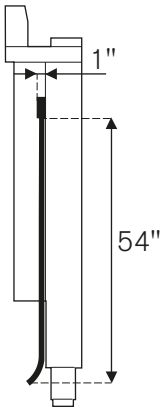
1"
54"

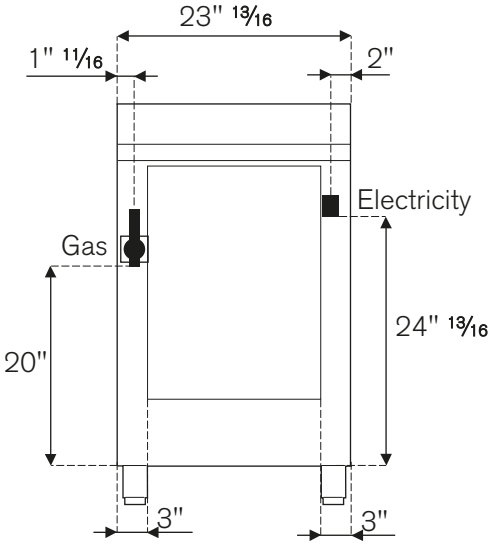
23" 13/16
1" 11/16
2"
Electricity
Gas
20"
24" 13/16
3"
3"

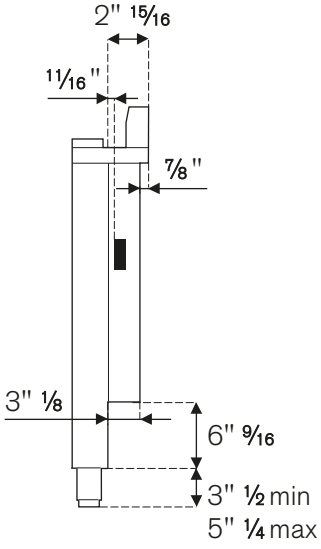
2" 15/16
11/16"
7/8"
3" 1/8
6" 9/16
3" 1/2 min
5" 1/4 max