XO SINK PRO NANOGRIND

COMPACT DESIGN
PERFECT FOR APARTMENTS
& MULTIFAMLY

MODEL XOD12BUILDER

CONTINUOUS FEED WASTE DISPOSAL

Comes with all these
Features Included:

- Permanent Magnet 2850 RPM Motor
- Generates High Torque / Avoids Jams
- Stainless Steel Turntable & Cast Impellers
- Bio-guard Antimicrobial Protection
- Removable Splash Guard
- Factory Installed Molded Power Cord & Plug
- Precision Balanced
- XO QuicKonnect Mount

3 YEAR
IN HOME WARRANTY

XO LOVE IT OR LEAVE IT
100% GUARANTEED
For 90 Days, all our products are backed by our unique Love It or Leave It Guarantee

SEPTIC SAFE

Designed to Handle
Common Kitchen
Food Waste Like:

Melon Rinds
Small Bones
Corn Cobs
Nut Shells
Fruit Pits
Tea Leaves
Coffee Grounds
Fish Bones
Egg Shells
Grapefruit Halves
Vegetable Scraps

XO

the next level
in luxury appliances

XO SINK PRO NANOGRIND

CONTINUOUS FEED 1/2 HP
FOOD WASTE DISPOSAL

MODEL XOD12BUILDER

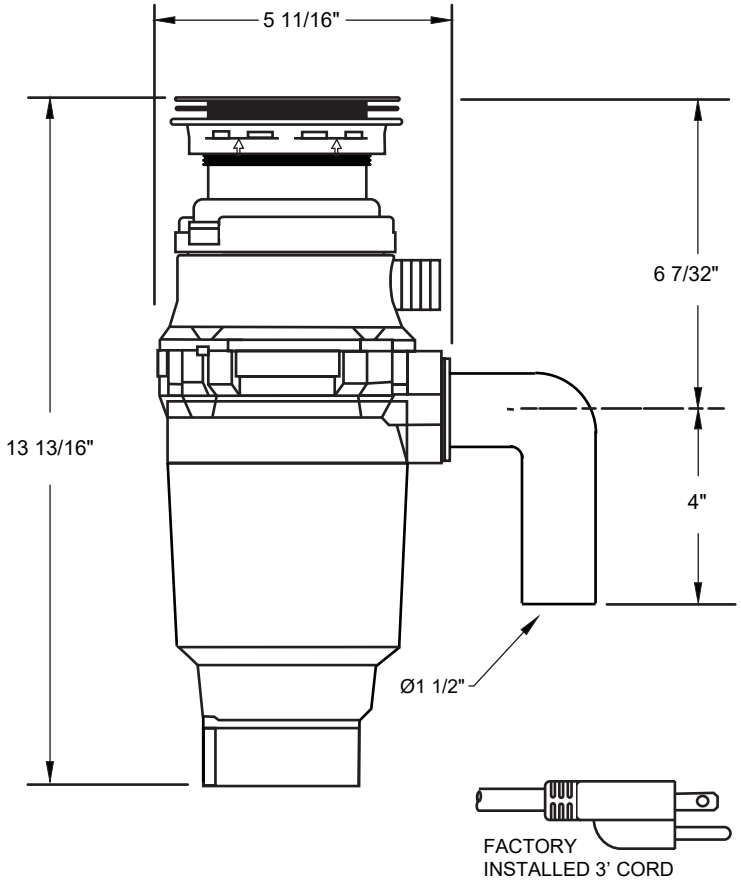

The XO QuicKonnect System

ATTACH SINK FLANGE ASSEMBLY TO SINK

INSTALL THE DRAIN ELBOW IN THE DISPOSER

TWIST & LOCK DISPOSER TO SINK FLANGE ASSEMBLY

MAKE PLUMBING CONNECTIONS & PLUG IN POWER CORD

POPULAR OPTIONS:

(continuous feed models / sold separately)

PART #:
Mount Adapter
Allows use with existing
3 bolt flange hardware

MODEL: XODAIRSWITCH
For Remote Operation

SPECIFICATIONS

HP	1/2
Motor Type	Permanent Magnet
Feed	Continuous
Volts	120V
Amps	3.1 amps
Frequency	50/60Hz
Motor Speed	2850 RPM
Hopper Capacity	29oz
Balance Level	G0.4
Sink Flange	Stainless Steel
Stopper	Stainless Steel
Drain Elbow	ABS
Bearings	Permanently Lubricated, Sleeve Type
Manual Reset Protector	Protection for Overload and Temp.
Shipping Weight	9.7 lbs
Pallet Quantity	180 pcs

XO Appliance - 24 Eisenhower Parkway - Roseland, NJ 07068
(800)966-8300 www.XOAppliance.com