RNCT305G, RNCT365G

dacor
The Life of the Kitchen.®

Renaissance® 30” and 36” Wide Drop-in Gas Cooktops

PLANNING GUIDE

⚠ WARNING

- Observe all governing codes and ordinances during planning and installation.
- Contact your local building department for further information.
- This appliance must be installed in accordance with the accompanying installation instructions.

dacor AMERICAN MADE FAMILY OWNED CALIFORNIA

Product tolerances ±1/16” (±1.6 mm) unless otherwise

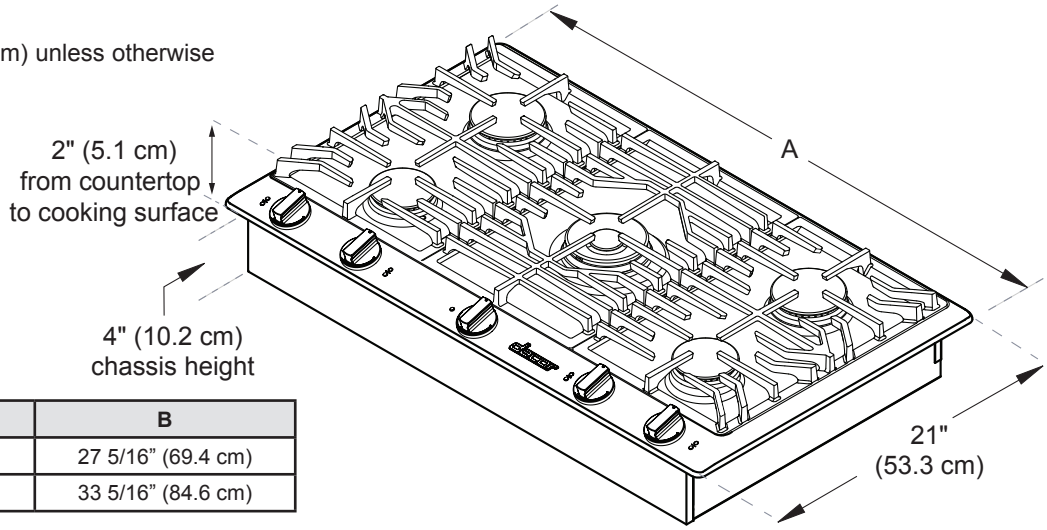

Model	A	B
RNCT305G	30” (76.2 cm)	27 5/16” (69.4 cm)
RNCT365G	36” (91.4 cm)	33 5/16” (84.6 cm)

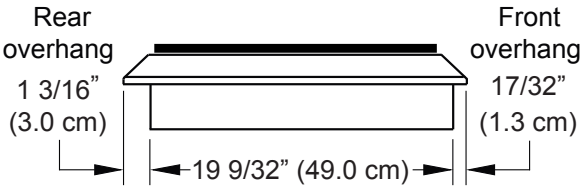

Side View

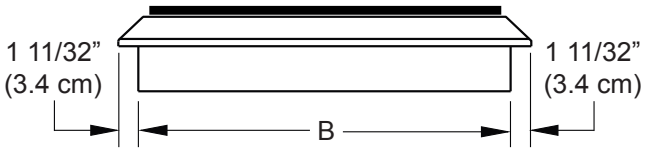

Front View

PRODUCT DIMENSIONS

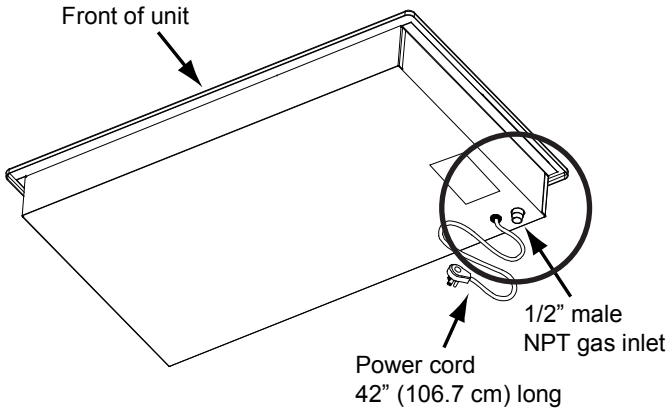

UTILITY LOCATIONS

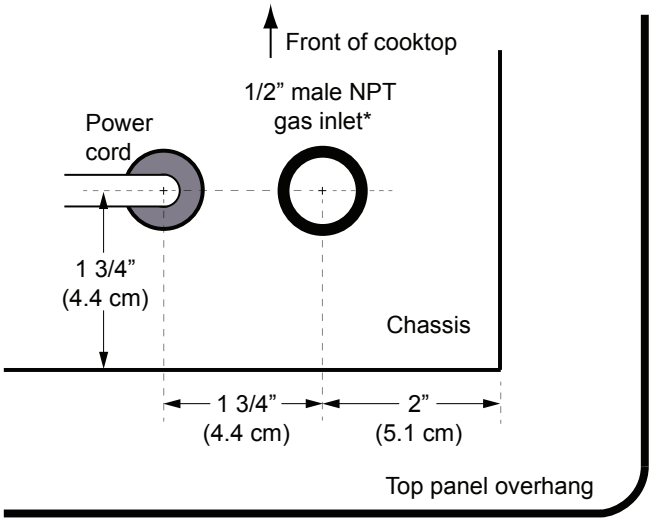

*Gas inlet extends 1” (2.5 cm) from bottom

UTILITY DIMENSIONS

Electrical Requirements

⚠ WARNING

To prevent an electric shock hazard, the power supply must meet the specifications stated below. It is the owner’s responsibility to make sure that the electrical service meets electrical requirements and that the electrical outlet has been properly installed by a licensed electrician.

◊ The cooktop is supplied with a factory installed, 42 inch power cord with a, three-prong, grounding electrical plug. It is connected to the chassis at the bottom right rear corner (see ***Chassis Bottom Diagram*** below). It must be connected to a dedicated, grounded three-prong electrical outlet installed by a licensed electrician.

◊ The electrical installation, including minimum supply wire size and grounding, must be done in accordance with National Electric Code ANSI/NFPA 70* and local codes and ordinances. A copy of this standard may be obtained from:

National Fire Protection Association
1 Batterymarch Park
Quincy, Massachusetts 02269-9101

◊ The correct voltage, frequency and amperage must be supplied to the electrical outlet according to the product data label located on the bottom of the chassis. See the Gas and Electrical Requirements table on this page for reference.

◊ Be certain to locate the electrical outlet so that the power may be easily disconnected if the unit needs service.

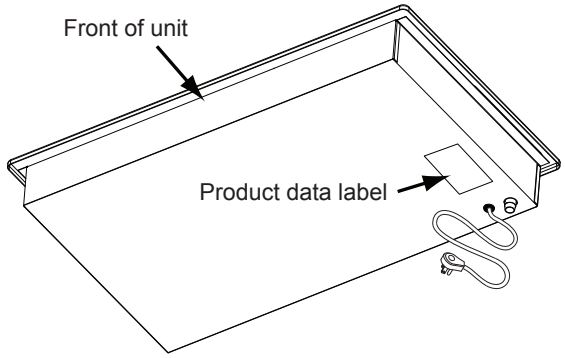

CHASSIS BOTTOM DIAGRAM

Gas Supply Requirements

◊ Be certain that the cooktop being installed is correct for the gas service being provided (natural gas or LP gas). Also, if operating the cooktop at an altitude above 4000 ft. (1219 m) make sure it is equipped for high altitude operation.

◊ Units equipped for LP operation have “LP” in the model number listed on the product data label. See the Chassis Bottom Diagram for label location.

◊ Units equipped for high altitude operation have an “H” at the end of the model number listed on the product data label.

◊ Check your local building codes for the proper method of installation. In the absence of local codes, this appliance should be installed in accordance with the National Fuel Gas Code ANSI Z223.1/NFPA 54.

◊ An external manual shut-off valve must be installed between the gas inlet and the cooktop for the purpose of turning on or shutting off gas to the appliance.

◊ The cooktop comes from the factory with a regulator in the shipping carton. Use only the regulator provided. The regulator must be installed in the gas line that runs from the cooktop gas inlet to the gas shut off valve.

◊ The regulator inlet accommodates a 3/4” gas line. The inlet to the cooktop itself is equipped with a 3/4” male NPT fitting.

The cooktop gas connection is located on the bottom of the cootktop in the back right corner as you face the front of the unit. See the ***Chassis Bottom Diagram*** on this page.

	RNCT305G_NG RNCT365G_NG	RNCT305G_LP RNCT365G_LP
Gas type	Natural Gas	LP Gas
Manifold pressure	5” water column	10” water column
Min. gas supply Pressure**	6” water column	11” water column
Max. gas supply pressure	1/2 psi	1/2 psi
Total connected load	0.25 Amp. (30 Watts)	0.25 Amp. (30 Watts)
Circuit requirement	120 Vac, 60 Hz, 15 Amp.	120 Vac, 60 Hz, 15 Amp.

GAS AND ELECTRICAL REQUIREMENTS*

* The electrical and gas data on this page is for reference only. If the above data does not agree with the product data label, use the data on the product data label.

** The gas supply pressure for testing the regulator setting shall be at least 1 inch water column (249 Pa) above the specified manifold pressure.

Cabinet and Countertop Layout

⚠ WARNING

- To reduce the risk of personal injury caused by reaching over a hot appliance, avoid locating cabinet storage space directly above the cooktop.
- Failure to meet or exceed the maximum and minimum dimensions/clearances stated in these instructions may result in a fire hazard.
- Follow the countertop manufacturer’s instructions regarding the minimum corner radius, use of heat reflective tape, reinforcement of corners, etc.

◊ Carefully check the location where the cooktop will be installed. For best performance, the cooktop should be placed away from drafts that may be caused by doors, windows and heating and air conditioning outlets.

◊ This appliance is to be used in conjunction with a suitable vent hood or approved Dacor downdraft vent system.

Cabinet tolerances: +1/16” (+1.6 mm), -0, unless otherwise stated

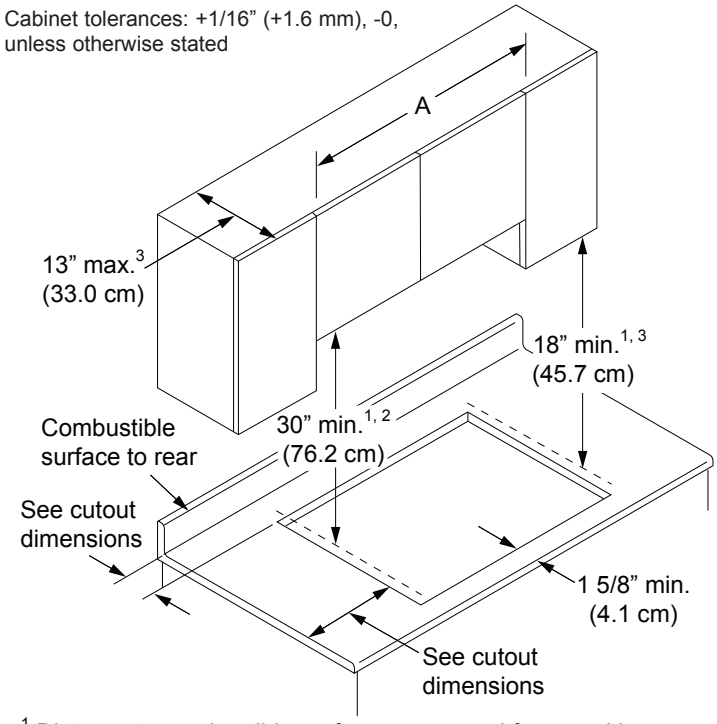

[1] Distance to combustible surfaces measured from cooking surface (top of cooktop grate).

[2] If installing with an overhead range hood, check the hood specifications for minimum required clearances.

[3] This specification does not apply for cabinets located greater than a horizontal distance of 5 1/2” (14.0 cm) from edge of cooktop. Allow 6 7/8” (17.5 cm) from cutout edge.

MINIMUM REQUIRED CLEARANCES AROUND THE COOKTOP

Model	(A) Minimum	(A) Recommended
RNCT305G	30” (76.2 cm)	36” (91.4 cm)
RNCT365G	36” (91.4 cm)	42” (106.7 cm)

◊ Allow a minimum 1/4” (6 mm) clearance between the bottom of the cooktop chassis and all combustible surfaces, including the upper edge of a drawer installed below the cooktop.

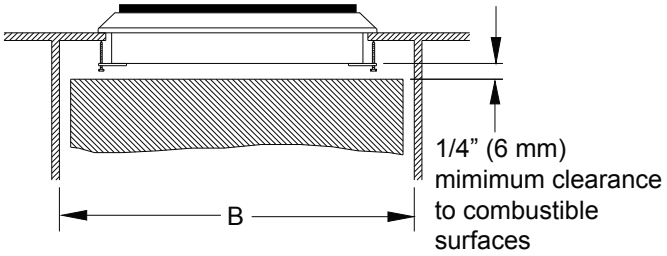

* Allows for clearance between hold down brackets

Model	B Minimum
RNCT305G	29 1/4” (74.3 cm)
RNCT365G	35 1/4” (89.5 cm)

◊ The gas supply piping, gas shut-off valve and the electrical outlet must be located so they do not interfere with the cooktop when it is installed. If installing another appliance in the cabinet below, allow for the routing of gas and electrical service behind it.

The installation must allow for the following:

◊ Access to the gas shut-off valve and regulator when the unit is installed.

◊ Access to the electrical outlet when the cooktop is in place. The 42” (106.7 cm) power cord must be able to reach the electrical outlet

◊ Access to the underside of the cooktop for service and inspection purposes

◊ Clearance inside the cabinet to allow for proper hold down bracket installation.

To allow access to the utilities and cooktop bottom, a fixed shelf should not be installed below the cooktop. See the following pages for countertop cutout dimensions.

Cutout Dimensions

Cabinet tolerances: +1/16” (+1.6 mm), -0, unless otherwise stated

Downdraft Compatibility

IMPORTANT: If installing cooktop with a downdraft, install only the Dacor downdraft models specified in the table below.

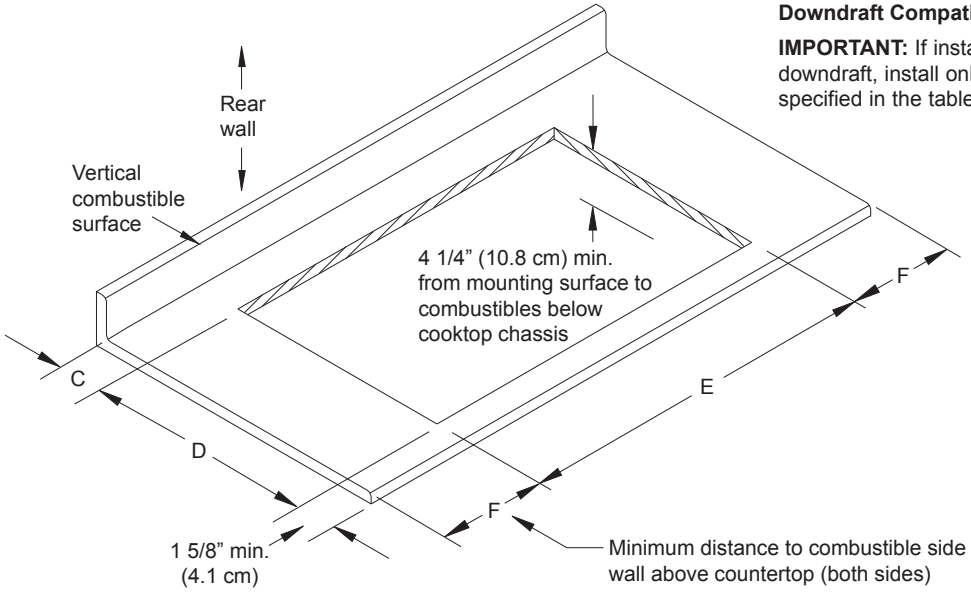

Configuration	C (Minimum)	D	E	F (Minimum)
RNCT305G with no downdraft	3 1/4” (8.3 cm)	19 5/8” (49.9 cm)	27 5/8” (70.2 cm)	6 7/8” (17.5 cm)
RNCT305G with ERV3015 downdraft	3/8” (1.0 cm)	22 3/4” (57.8 cm)		
RNCT365G with no downdraft	3 1/4” (8.3 cm)	19 5/8” (49.9 cm)	33 5/8” (85.4 cm)	
RNCT365G with ERV3615 downdraft	3/8” (1.0 cm)	22 3/4” (57.8 cm)		

For replacement purposes, a RNCT series cooktop will fit into the cutout of a Dacor SGM series cooktop.

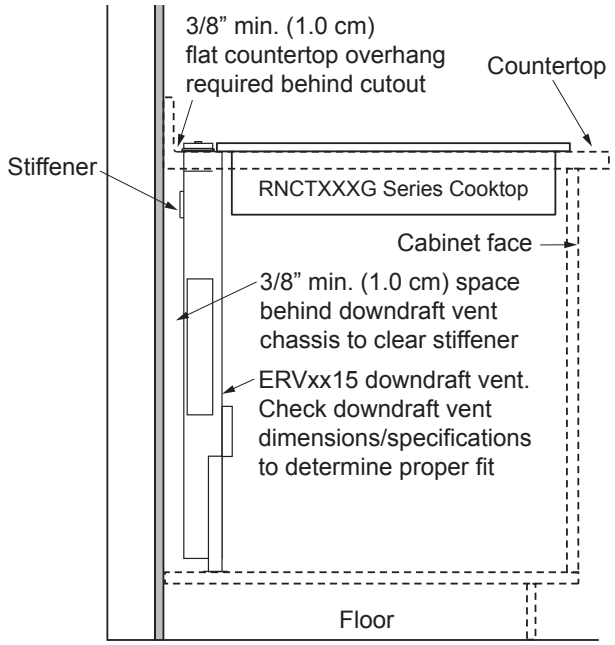

SIDE VIEW - RNCT SERIES COOKTOP WITH DACOR DOWNDRAFT