Use & Care
MANUAL

1 & 3 SERIES

Built-In Dishwashers

VDW302 / VDW302WS
RVDW103 / RVDW103WS
FDW103 / FDW302
FDW103WS/ FDW302WS
CFDW103 / CFDW302

Congratulations

Your dishwasher is designed to offer years of reliable service. This Use & Care Guide will provide you with the information you need to become familiar with your dishwasher's operation and care.

Your complete satisfaction is our ultimate goal. If you have any questions or comments about this product, please contact the dealer from whom you purchased it, or contact our Consumer Support Center at 1-888-845-4641.

For more information about the complete and growing selection of products, visit us online in the US at www.vikingrange.com or in Canada at www.brigade.ca

Table of Contents

Getting Started

Warnings & Safety Instructions ____ 3
Features ____ 5

Operation

Loading the Dishwasher ____ 6
Rack Adjustments ____ 7
Proper and Improper Loading ____ 9
Operating Instructions ____ 11
Program Table ____ 12
Function Buttons ____ 14
Detergent and Rinse Agent Dispenser ____ 16

Product Care

Care and Maintenance ____ 20
Cleaning the Filters ____ 20
Cleaning the Spray Arms ____ 21
Troubleshooting ____ 22
Service Information ____ 26
Warranty ____ 27

Warnings & Safety Instructions

Please read this user manual and particularly the safety instructions completely and carefully. They will save you time and effort and help to ensure optimum dishwasher performance. Be sure to observe all listed warnings and cautions. Look particularly for the icons with exclamation marks inside. The information icon will also provide important references.

Warning and Important Safety Instructions appearing in this manual are not meant to cover all possible conditions and situations that may occur. Common sense, caution, and care must be exercised when installing, maintaining, or operating the appliance. **ALWAYS** contact the manufacturer about problems or conditions you do not understand.

Recognize Safety Symbols, Words, Labels

⚠ DANGER

Hazards or unsafe practices which WILL result in death or severe personal injury.

⚠ WARNING

Hazards or unsafe practices which COULD result in death or severe personal injury.

⚠ CAUTION

Hazards or unsafe practices which COULD result in minor personal injury.

All safety messages will identify the hazard, tell you how to reduce the chance of injury, and tell you what can happen if the instructions are not followed.

Read and follow all instructions before using this appliance to prevent the potential risk of fire, electric shock, personal injury, or damage to the appliance as a result of improper usage of the appliance. Use appliance only for its intended purpose as described in this manual.

To ensure proper and safe operation: Appliance must be properly installed and grounded by a qualified technician. **DO NOT** attempt to adjust, repair, service, or replace any part of your appliance unless it is specifically recommended in this manual. All other servicing should be referred to a qualified servicer.

KEEP THESE INSTRUCTIONS FOR FUTURE REFERENCE

⚠ WARNING

State of California Proposition 65

-This product contains one or more chemicals known to the State of California to cause cancer.

-This product contains one or more chemicals known to the State of California to cause birth defects or other reproductive harm.

⚠ WARNING

Danger of Suffocation!

Ensure that any plastic wrappings, bags, small pieces, etc., are disposed of safely and kept out of the reach of children.

⚠ WARNING

Improper connection of the equipment-grounding conductor can result in a risk of electric shock. Check with a qualified electrician or service representative if you are in doubt whether the appliance is properly grounded. Do not modify the plug provided with the appliance; if it will not fit the outlet, have a proper outlet installed by a qualified electrician.

⚠ WARNING

If your dishwasher is equipped with interior lighting, replacement should only be done by an authorized service agent.

⚠ WARNING

When using the dishwasher, follow basic precautions, including the following.

Read all instructions before using the dishwasher! Save these operating instructions and pass them on to any future user.

- Use the dishwasher only for its intended purpose as described in this user manual. This appliance is intended for normal household use only.
- The manufacturer disclaims responsibility for damage or injury caused by improper use of this appliance.
- The information in this user manual must be followed to minimize the risk of fire or explosion and to prevent property damage, personal injury, or loss of life.
- **DO NOT** operate your dishwasher unless all the enclosure panels are properly in place.
- **DO NOT** tamper with the controls.
- **DO NOT** abuse, sit on, stand in or on the door or dish rack of the dishwasher.
- The cup racks are designed to support cups, glasses, and kitchen utensils. When the cup racks are in the dishwasher, do not lean on or use the cup racks to support your body weight.
- To reduce the risk of injury, **DO NOT** allow children to play in, on, or near the dishwasher.
- Use only detergents or rinse agents recommended for use in a household dishwasher and keep them in a dry place out of the reach of children. Check that the detergent dispenser is empty after the completion of each wash program.
- Dishwasher detergents are alkaline. They can be dangerous if inhaled or swallowed. Avoid contact with skin and eyes and keep children and people in poor health away from the dishwasher when the door is opened. Consult a doctor immediately if detergent has been swallowed or inhaled.
- **DO NOT** drink water from the dishwasher! Harmful residues could be present.
- Under certain conditions, hydrogen gas may be produced in a hot water heater system that has not been used for two weeks or more. HYDROGEN GAS IS EXPLOSIVE. If the hot water system has not been used for such a period, before using the dishwasher turn on all hot water taps and let the water flow from each for several minutes. This will release any accumulated hydrogen gas. As gas is flammable, do not smoke or use an open flame during this time.
- **DO NOT** store or use flammable liquids or vapors in the area of the dishwasher.
- When loading items to be washed, position sharp items so that they are not likely to damage the door seal and load sharp knives with the handles up to reduce the risk of cut-type injuries.
- **DO NOT** wash plastic items unless they are marked "dishwasher safe" or the equivalent. For plastic items not so marked, check the manufacturer's recommendations.
- If a malfunction occurs, switch off the appliance and turn off the water supply to the dishwasher.
- Before cleaning or carrying out maintenance, switch off the appliance, disconnect the power plug, and turn off the water supply.
- Repairs and technical modifications must be carried out exclusively by a qualified technician.
- If the dishwasher is not in use for an extended period of time (i.e. vacation home), we recommend you check that the baskets are empty, leave the inside of the dishwasher clean, leave the door cracked open to allow air to circulate, and turn off both the power and water supply to the dishwasher.
- This appliance must be grounded. In the event of a malfunction or breakdown, grounding will reduce the risk of electric shock by providing a path of least resistance for electric current. This appliance is equipped with a cord having an equipment-grounding conductor and a grounding plug. The plug must be plugged into an appropriate outlet that is installed and grounded in accordance with all local codes and ordinances.
- This appliance must be connected to a grounded metal, permanent wiring system, or an equipment-grounding conductor must be run with the circuit conductors and connected to the equipment-grounding terminal or lead on the appliance.
- The dishwasher installation must be performed in accordance with the installation guide. If you did not receive an installation guide, order it by calling 1-888-845-4641 or you may also download it from our website in the US (www.vikingrange.com) or in Canada (www.brigade.ca).
- Installation, maintenance, and repair should be performed by a qualified installer. Work by unqualified persons could be dangerous and may void the warranty.
- **DO NOT** operate the dishwasher if damaged, malfunctioning, partially disassembled, or if it has missing or broken parts.
- Before installation or service, disconnect the power supply to the work area by unplugging the unit, "tripping" the circuit breaker, or removing the fuse.

Warnings & Safety

- Only connect the dishwasher to the power supply when all installation and plumbing work is complete.
- **DO NOT** install or store the dishwasher where it can be exposed to below freezing temperatures or exposed to weather.
- Dishwasher must be secured to adjacent cabinetry using the brackets provided. Failure to do this may cause damage to property or bodily injury.
- Connect to a properly rated, protected and sized power supply circuit to avoid electrical overload. The dishwasher is designed for an electrical supply of 120V (volts), 60Hz (hertz), AC, connected to a dishwasher-dedicated, properly grounded electrical circuit with a fuse or breakers rated for 15 amperes. Electrical supply conductors shall be a minimum of #16 AWG copper wire rated at 167°F (75°C) or higher. These requirements must be met to prevent injury and machine damage. Consult a qualified electrician if in doubt.
- **DO NOT** use any extension cord or portable outlet device to connect the dishwasher to a power supply.
- Remove the dishwasher door when removing an old dishwasher from service or discarding it. Ensure that the dishwasher presents no danger to children while being stored for disposal.
- Old appliances may contain materials that can be recycled. Please contact your local recycling authority about the possibility of recycling these materials.

Features

3 Series

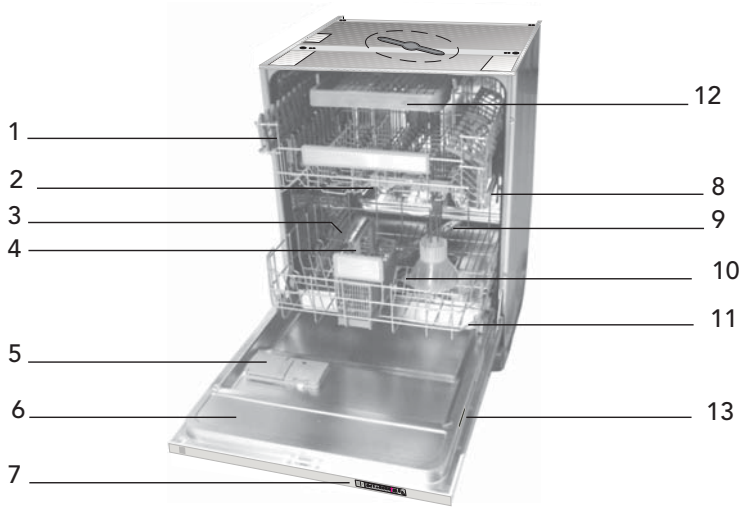

1. Upper rack
2. Upper spray arm
3. Salt container (select models)
4. Cutlery basket
5. Detergent dispenser
6. Door
7. Control panel
8. Guiding track for the upper rack
9. Lower spray arm
10. Filters
11. Lower rack
12. Removable third rack
13. Model and Serial Tag

1 Series

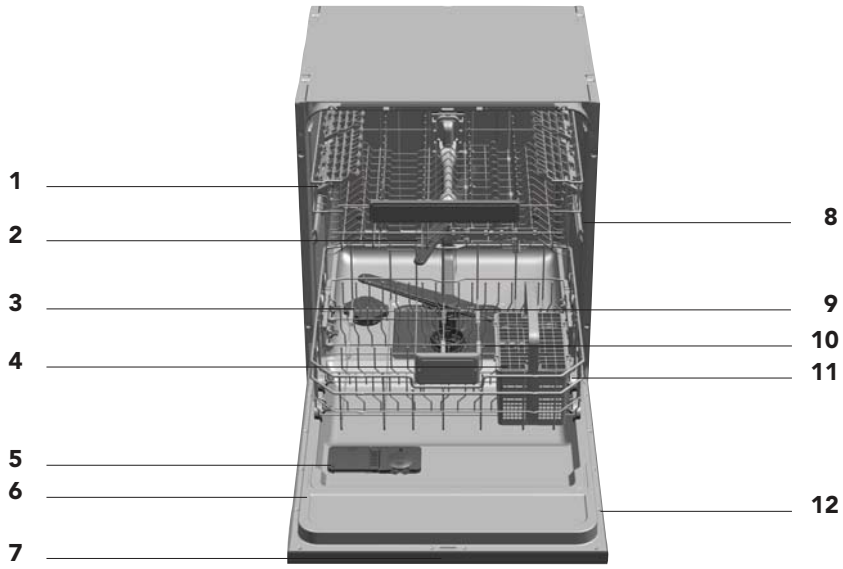

1. Upper rack
2. Upper spray arm
3. Salt container (select models)
4. Cutlery basket
5. Detergent dispenser
6. Door
7. Control panel
8. Guiding track for the upper rack
9. Lower spray arm
10. Filters
11. Lower rack
12. Model and Serial Tag

Loading the Dishwasher

- Pull the handle to open the door. If the door is opened during operation, the dishwasher will stop running. Once the door is closed, the program will continue.
- Remove coarse food leftovers from tableware.
- Now you can load the dishwasher.

Upper Rack

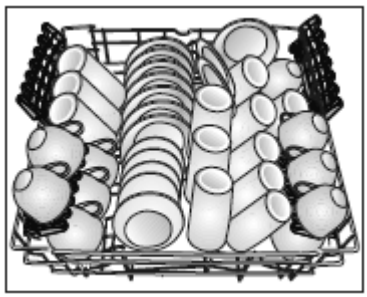

Top rack load pattern for 12 place setting according to the AHAM DW-1 Standards

Lower Rack

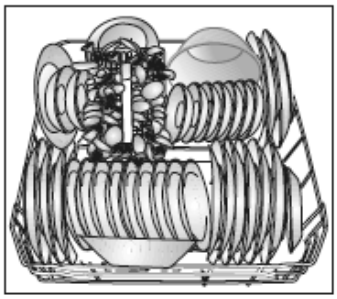

Bottom rack load pattern for 12 place setting according to the AHAM DW-1 Standards

⚠ WARNING

- Large knives and other utensils with sharp tips and edges must be placed horizontally into the upper rack due to risk of injury. Other smaller knives and sharp utensils should be placed with sharp side down in the cutlery basket.
- Use extreme caution when removing knives and other sharp utensils from the dishwasher. These items may have shifted position during the wash program, and may be wet or slippery.
- The cup racks are designed to support cups, glasses, and kitchen utensils. When the cup racks are in the dishwasher, do not lean on or use the cup racks to support your body weight.

- Your dishwasher holds a maximum of 12 place settings.
- Place all containers such as cups, glasses, and pots into the dishwasher with the opening facing downwards (so that no water can collect).
- Small and light items can go into the upper rack.
- Long and narrow items are placed in the middle of the racks.
- Place all large and very dirty items in the lower rack.
- Dishes and cutlery should not be placed above each other.
- Glasses should not touch each other.
- The movement of the spray arms must not be hindered.
- **DO NOT** overload your dishwasher and pay attention to manufacturer instructions regarding dishes which are appropriate for use in a dishwasher. Only with suitable dishwasher safe dishes will you obtain optimal washing results with a sensible use of energy.

Additional Loading Patterns

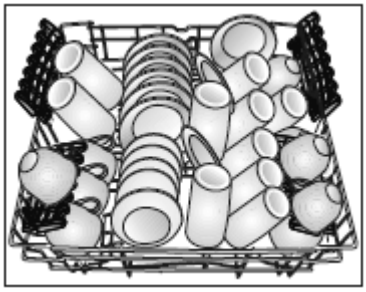

Top rack load pattern for 10 place setting

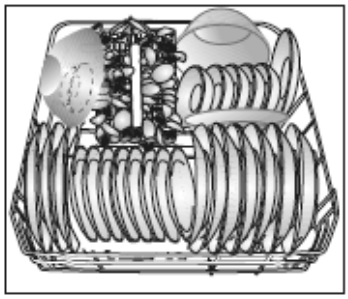

Bottom rack load pattern for 10 place setting

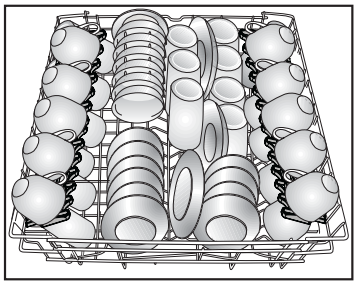

Top rack load pattern for 14 place international setting

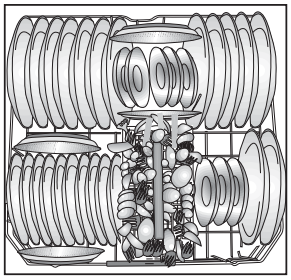

Bottom rack load pattern for 14 place international setting

Rack Adjustments

Upper Rack

Load the upper rack with dessert plates, cups, glasses, etc.

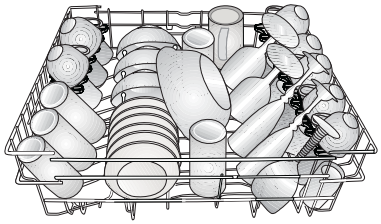

Variable Height Setting

The upper rack is equipped with a lifting mechanism which enables you to change the height of the rack even if it is fully loaded, and without having to remove it from the dishwasher.

Lift Upper Rack

- To lift the upper rack to a higher position, hold it on one side and carefully pull it upwards **A**.
- To lift the opposite side of the rack, hold it and pull it upwards in the same manner.

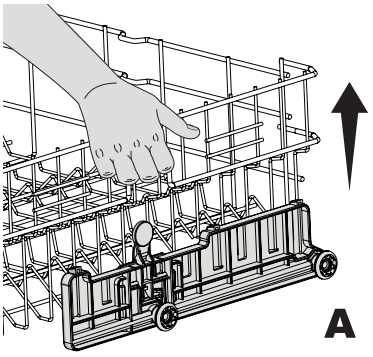

To Lower Upper Rack

- To lower the upper rack, hold and press in the rack lever on one side and carefully lower the rack without releasing the lever **B**.
- Repeat the procedure with the lever on the opposite side of the rack

⚠ NOTICE

Made sure both levers catch in the same height position

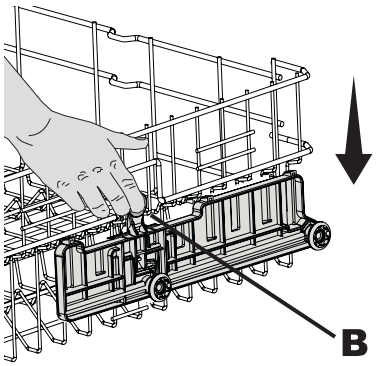

Folding Tines

There are "folding tines" in the upper rack to allow you more space to accommodate glasses or cups.

- Simply pull in the first front folding tine, move it to left A and right **B** to place in another position. The tines will also lay flat.

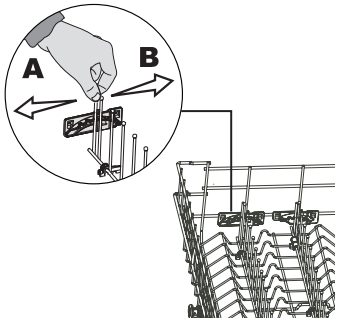

Adjustable Shelves

Depending on the size of the glasses and cups, the shelf height setting may be adjusted.

- Fold the shelf upwards **A**.
- Positioning at the desired height **B**.
- Fold the shelf again downwards **C**.

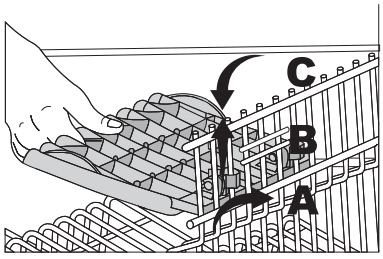

Rack Adjustments

Removable Third Rack

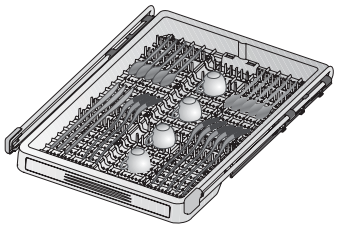

The removable third rack is designed for small dishes, or long dishes that cannot fit into the cutlery basket.

Thanks to the easy take-out feature, it allows removing the dishes from the machine together with the rack after washing operation. Since it can fit into all standard size drawers, there is no need to remove the dishes from the basket and place them separately into the kitchen drawers or shelves.

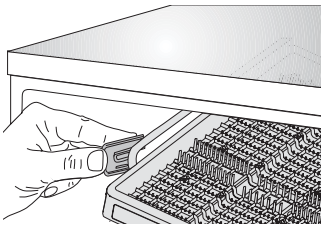

If you don't want to use the removable third rack, pull it back to yourself to remove it from the machine, rotate the rail lids A towards outside and pull them towards yourself to take them out. After taking out the rack by lifting it up, remove the carrier part from the rails by pulling it towards yourself. Replace the rail lids and push them back to seat them into their places. Turn the rails inside the machine outwards B to seat them properly in their places.

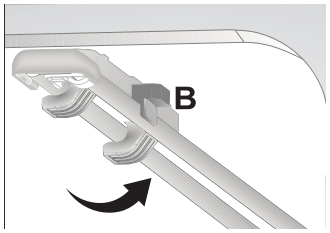

In order to put the removable third basket back into its place, repeat the same process in reverse order.

Lower Rack

Use the lower rack for plates, bowls, pots, etc.

- Fold the shelf upwards **A**.
- Positioning at the desired height **B**.
- Fold the shelf again downwards **C.**

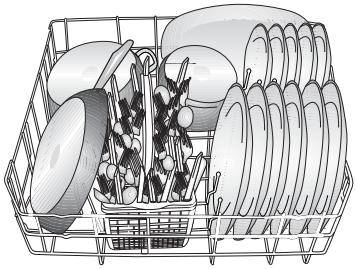

Adjustable Lower Rack Tines

The six piece foldable tines (A) located in the lower rack of the machine are designed for an easier placement of large pieces such as pans, bowls, etc. You can create larger spaces by folding each tine individually or all of them at once. To bring the adjustable tines into horizontal position, grab the tines from mid position and push them in the directions of arrows (B) To bring the tines back to vertical position, just lift them up. Adjustable tines will click into the latch again.

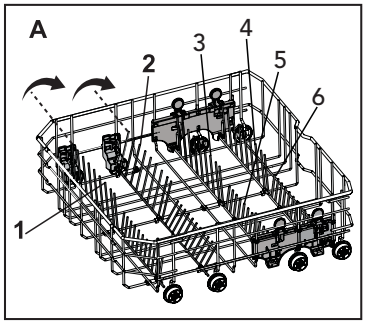

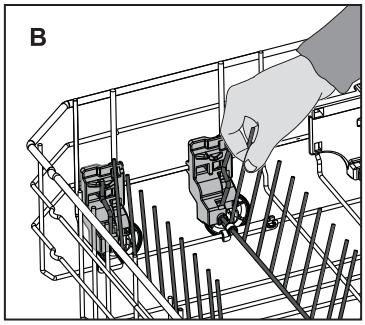

⚠ NOTICE

Bringing the tines to the horizontal position by holding them from the tips may cause them to bend. Therefore, adjust the tines by holding them by their stems and pushing in the direction of arrow.

⚠ NOTICE

When finished, test to ensure that the spray arm can still move freely.

Proper and Improper Loading

Sliding Cutlery Basket

Designed to allow free placement of the dishes according to their size; the Sliding Cutlery Basket can slide over the tines to the left **A** and right **B** side.

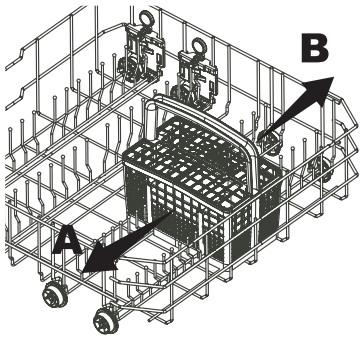

Use the basket inset C for your cutlery so that all items in the basket are surrounded by a sufficient water flow.

For larger items (e.g. wire whisks) the basket inset may be removed C. Simply raise.

To make loading easier, the cutlery basket can be removed. Simply take out the basket upward.

Place long items such as ladles, cooking spoons, etc., on the shelf in the upper rack.

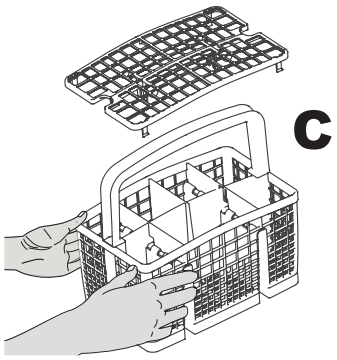

⚠ NOTICE

When finished, test to ensure that the spray arm can still move freely.

1: Salad Fork
2: Teaspoon
3: Dinner Fork
4: Knife – Solid Handle
5: Serving Spoon
6: Serving Fork

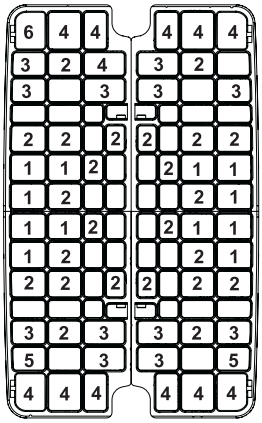

Sliding cutlery basket load pattern for 12 place settings according to the AHAM DW-1 Standards

⚠ NOTICE

- Place all large and very dirty items in the lower rack.
- Place all containers such as cups, glasses, and pots into the dishwasher with the opening facing downwards (so that no water can collect).
- The movement of the spray arms must not be hindered.
- Do not overload your dishwasher. Dishes and cutlery should not be placed above each other. Glasses should not touch.
- Only with suitable dishwasher safe dishes will you obtain optimal washing results with a sensible use of energy.

Proper and Improper Loading

Improper Loading

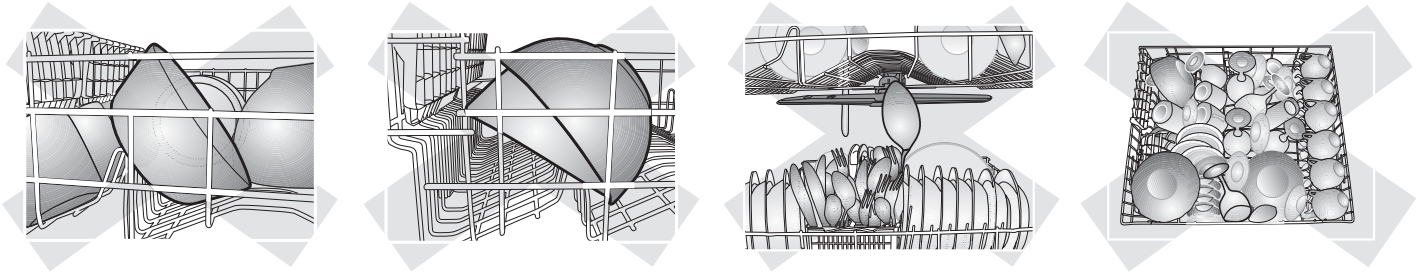

⚠ NOTICE

What Should Not be Washed in Your Dishwasher

- Rust-sensitive steel parts like iron and cast iron that can rust and stain other utensils and damage the interior stainless steel liner of the dishwasher and void the warranty. DO NOT wash copper, brass, pewter, bronze, or tin.
- Cutlery with wooden or horn handles and cutlery with mother-ofpearl or porcelain handles will deteriorate over time if put in the dishwasher.
- Plastics may lose their shape or color with hot water; please follow the instructions of plastic manufacturers. Be sure that plastic items are marked "dishwasher safe."
- Glued dishes or cutlery are not suitable for machine washing since certain adhesives may get soft or dissolve with hot water.
- Aluminum may fade over time. Minerals in water and detergent may cause the aluminum to darken or spot.
- Sterling silver articles should not be washed in the dishwasher because they tend to discolor and become dull by dishwasher detergent.
- Silverware and stainless steel items should not be in contact with each other. Mixing these items can cause staining. Remove and hand-dry these items immediately when the program ends.
- Decorated glasses, porcelain, fine china, and china with gold rims are sensitive to machine washing. They may lose their patterns and colors over time.
- Crystal and very fine glassware may become opaque (etch), losing their shine over time. You may prefer to wash them by hand.
- **DO NOT** wash sponges or dish cloths in dishwasher.
- **DO NOT** wash art and craft articles in dishwasher.
- Disposable plastics and disposable aluminum cannot withstand high temperatures; DO NOT wash them in the dishwasher.

⚠ CAUTION

- If in doubt, wash by hand or follow the instructions from the manufacturer of utensils, dishes, glasses, or pots and pans.
- Do not wash items soiled with cigarette ash, candle wax, varnish, paints, or chemicals since they can damage your dishwasher.

⚠ CAUTION

We recommend when buying new dishware, try to choose ones that are suitable for machine washing (marked dishwasher safe).

Caring for your Tableware

The combination of high temperatures and dishwasher detergent may cause damage to some items if they are washed in the dishwasher. Remember, if there is any doubt about any aspect concerning items to be washed in the dishwasher, follow the instructions from the manufacturer of the items, or wash the items by hand.

Operating the Dishwasher

⚠ NOTICE

If you do not perform any operation after seitching on the machine, it will be automatically switched off within 5 seconds.

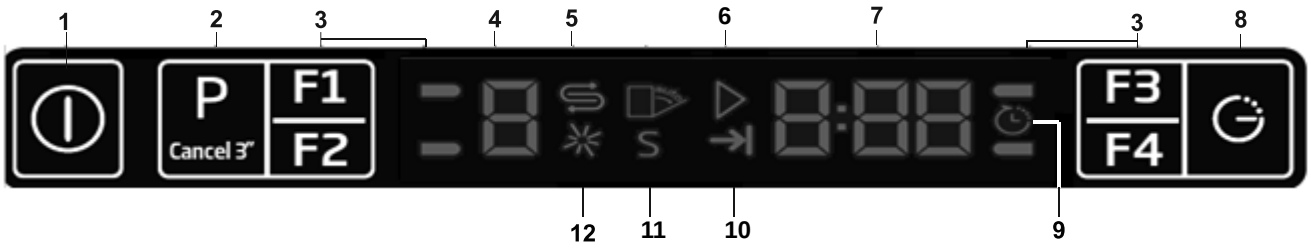

1. On/Off Button
2. Program Selection /Program Cancel Button
3. Function Buttons & Indicators
   - F1 Half Load
   - F2 Sanitize
   - F3 HighGloss
   - F4 Intense Wash
4. Program Indicator
5. Salt Indicator (depending on model)
6. Start/Cancel Indicator
7. Time Delay / Program Time Indicator
8. Time Delay Button
9. Time Delay Indicator
10. End of Program Indicator
11. Sanitized Indicator
12. Rinse Aid Indicator

- Open the door and load the dishwasher.
- Check that both upper and lower spray arms move freely.
- Pour correct amount of detergent into the detergent dispenser and close the lid.
- Push in the On/Off button 1 and check that the display lights come on.
- Check the rinse agent level indicator 12. If necessary, refill the rinse agent.
- Check the salt level indicator 5. If necessary, refill salt (select models).
- Use the Program Selection Button 2 to choose your washing program.
  - When there are few dishes, additionally use the Half Load function (F1).
  - Select other desired functions.
- Close the door and the program will start.
- When the wash program has ended, an electronic beep will sound and will continue every 10 seconds. After two minutes of elapsed time, the sound will stop. The beep can also be stopped by opening the door or by pressing the On/Off button 1.
- Press the On/Off button 1 and open the door after the program is completed. The indicator lights will go off.
- Allow your dishes to cool for 15 minutes, with the door open.
- Unload the dishes. Begin with the lower rack.

Floor Lighting Indicator

Your dishwasher will light the floor during the wash operation. The light will turn off automatically at the end of the washing operation. ***NOTE:*** When the washing program begins, the light indicator feature activates itself automatically and will automatically turn off at the end of the cycle. This feature is an option that cannot be turned off by the consumer.

⚠ CAUTION

Hot steam can escape! Danger of serious burns or other injury.

⚠ CAUTION

Avoid opening the door during the wash cycle. This interrupts the washing process, and hot steam will escape. Hot steam can cause burns and other serious injuries. When the door is closed, the program will continue.

PROGRAM TABLE											
Program number			**0**	**1**	**2**	**3**	**4**	**5**		**6**	**7**	**8**
Program name			TubClean	Pots & Pans+	Pots & Pans	Auto	CombiClean	Regular Wash*		China/Crystal	Quick Wash	Rinse & Hold
Wash Temperatures		**(°C)**	72	70	70	55	55	50-55		50	45	0
		(°F)	160	167	158	131	131	122-131		122	113	0
Rinse Temperatures		**(°C)**	70	75	70	61-67	66	61-67		65	55	0
		(°F)	140	158	158	142-157	151	142-157		149	131	0
Degree of dirtiness			-	High	High	Medium - High	Medium	Medium		Few	Few	-
Detergent in dispenser section	**15 ml**		-	-	-	-	-	-		-	+	-
	15-25 ml		+	+	+	+	+	+		+	-	-
	+ 5 ml		+	+	+	-	+	+		-	-	-
Recommended detergent amount	**Hard water**	**ml**	40	40	40	25-40	40	25-40		25	15-25	-
		tsp	8	8	8	5-8	8	5-8		5	3-5	-
	Medium water	**ml**	-	40	40	15-40	40	25		15-25	15	-
		tsp	-	8	8	3-8	8	5		3-5	3	-
	Soft water	**ml**	-	25-40	25-40	15-40	25-40	15-25		15	15	-
		tsp	-	5-8	5-8	3-8	5-8	3-5		3	3	-
Wash			-	+	+	+	+	+		+	-	+
Main wash			-	+	+	+	+	+		+	+	-
Dry			-	+	+	+	+	+		+	-	-
Sanitize			-	+	+	+	-	+		-	-	-
Duration (minutes)			75	120	101	100-155	182	100-155		65	35	12
								FDW302 VDW302 CFDW302	FDW302WS VDW302WS			
Water (liters)			14.4	20.2	16.2	9.0-21.2	19.2	9.0-21.2	11.4-23.6	11.8	11.6	4.4
Water (gallons)			3.80	5.34	4.28	2.38-5.55	5.02	2.38-5.55	2.91-6.07	3.10	3.10	1.20

The consumption values shown in the table were determined under standard conditions. For this reason, deviations are possible under practical conditions.

* The energy-usage label is based on this program.

PROGRAM TABLE									
Program number			**0**	**1**	**2**	**3**	**4**	**5**	**6**
Program name			TubClean	Pots & Pans+	Pots & Pans	Regular Wash *	DailyWash	Quick Wash	Rinse & Hold
Wash Temperatures		**(°C)**	72	70	70	50-55	60	45	0
		(°F)	160	167	158	122-131	140	113	0
Rinse Temperatures		**(°C)**	70	75	70	61-68	70	55	0
		(°F)	140	158	158	142-154	158	131	0
Degree of dirtiness			-	High	High	Medium	Medium	Few	-
Detergent in dispenser section	**15 ml**		-	-	-	-	-	+	-
	15-25 ml		+	+	+	+	+	-	-
	+ 5 ml		+	+	+	+	+	-	-
Recommended detergent amount	**Hard water**	**ml**	40	40	40	25-40	25-40	15-25	-
		tsp	8	8	8	5-8	5-8	3-5	-
	Medium water	**ml**	-	40	40	25	25	15	-
		tsp	-	8	8	5	5	3	-
	Soft water	**ml**	-	25-40	25-40	15-25	15-25	15	-
		tsp	-	5-8	5-8	3-5	3-5	3	-
Wash			-	+	+	+	-	-	+
Main wash			-	+	+	+	+	+	-
Dry			-	+	+	+	+	-	-
Sanitize			-	+	+	+	+	-	-
Duration (minutes)			75	120	102	90-135	100	35	12
						FDW103 RVDW103 CFDW103 / FDW103WS RVDW103WS			
Water (liters)			14.4	20.2	16.2	11.6-19.0 / 14.0-21.4	19	11.6	4.4
Water (gallons)			3.80	5.34	4.28	3.06-5.01 / 3.70-5.65	5.00	3.10	1.20

The consumption values shown in the table were determined under standard conditions. For this reason, deviations are possible under practical conditions.
* The energy-usage label is based on this program

Function Buttons

The combination of high temperatures and dishwasher detergent may cause damage to some items if they are washed in the dishwasher. Remember, if there is any doubt about any aspect concerning items to be washed in the dishwasher, follow the instructions from the manufacturer of the items, or wash the items by hand.

On/Off Button (1)
Turn the dishwasher on with the On/Off button. When you press the On/Off button, the indicator lights illuminate the display for ON position. The lights will turn off in the OFF position.

Program Selection /Cancel Button (2)
Press this button until the desired program appears in the indicator. To cancel the program, open the door, press and hold the Program Selection/Cancel button for 3 seconds. After the 3-2-1 countdown, 0:01 is displayed. Close the door and wait for the draining process to complete. Draining is completed in 2 minutes and the dishwasher will give an electronic beep when completed.

Function
If you press any of the Function buttons, (F1, F2, F3, F4), during program selection or time delay selection, an electric beep will be heard provided that the function is supported by the selected program. To cancel the selected function, keep the function button pressed until the indicator is no longer illuminated.

Half Load Function (F1)
If you want to run your machine without loading it completely, place your dishes into the machine as you desire. Press On/Off button to turn on your machine. Select desired program and press the Half Load Function button (F1). The Half Load Indicator lights up on the display, close the door of your machine to start the program. With the Half Load option you can use every part of your lower and upper baskets and save water and energy.

Sanitize Function (F2)
Sanitize function raises the water temperature in the final rinse to meet the requirements of NSF/ANSI STANDARD 184 for Residential Dishwashers. Certified residential dishwashers are not intended for licensed food establishments. Available only with Regular Wash, Pots & Pans, and Pots & Pans Plus programs.

Select desired program and press the Sanitize Function button (F2). The F2 button will light up on the display, close the door to start the program

At the end of a successful santization, "S" is displayed. The "S" will not be displayed if the cycle is interrupted or the water could not be heated to the reuired temperature.

NOTE: Only sanitizing cycles have been designed to meet the requirements of 6 for soil removal and sanitization efficiency. There is no intention, either directly or indirectly, that all cycles have passed sanitization performance tests.

HighGloss Function (F3) (3 Series only)
Provides superior drying performance

Intense Wash Function (F4) (3 Series only)
The Intense Wash impeller is located under the lower impeller and helps washing heavily soiled dishes placed in the right side of the lower basket. Better results are achieved when most soiled dishes are placed to the right side.

⚠ CAUTION Do not try to remove the Intense Wash impeller!

Remaining Time Indicator/Delay Time Indicator (7)
You can follow the remaining program duration from the time indicator display.

Delay Start Button (8)
This option enables you to start the selected program with a delay of 1 to 24 hours.
- Delay time is adjusted by pressing the Time Delay button (press several times).
- After adjusting the delay time, press the Program Selection / Cancel button.
- Close the door. At the end of the delay set, the program starts automatically.

⚠ NOTICE

During a wash program, the Delay Start option does not function.

Cancellation of a Function
To cancel the program, open the door, press and hold the Program Selection/Cancel button for 3 seconds. After the 3-2-1 countdown, 0:01 is displayed. Close the door and wait for the draining process to complete. Draining is completed in 2 minutes and the dishwasher will give an electronic beep when completed.

⚠ WARNING

Depending on the stage of the program you have cancelled, there may be detergent residue or rinse agent inside the machine and on the dishes. Make sure the items in the dishwasher are not used before washing properly. Ingestion or inhalation of detergent or rinse agent may cause serious injury. Avoid contact with skin and eyes and keep children and people in poor health away from these materials.

Changing Volume of Sound Indicator
- After turning on the dishwasher, press Time Delay and P buttons simultaneously. Keep them pressed until the countdown 3-2-1 is completed on the display.
- Press P button to activate the S: position.
- Each time the Time Delay button is pressed, it will change the warning sound volume as "S:0" off, "S:1" medium, and "S:2" high.
- Turn off the dishwasher with the On/Off button to save the changes.

NOTE: Factory setting is "S:2".

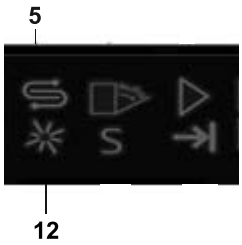

Rinse Agent Level Indicator LED (12)
If this indicator light comes on, you need to refill rinse agent. You can also tell whether rinse agent must be refilled by looking at the rinse agent dispenser. when the visual fill indicator is dark, there is enough rinse agent in the dispenser. When the color is light, open the dispenser and refill rinse agent.

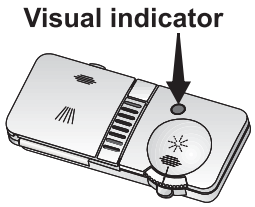

Dark: Sufficient rinse agent
Light: Refill rinse agent

Salt Level Indicator LED (5)
When this indicator light comes on, you must refill special salt. Only use special dishwasher salt in your machine to soften the water.

Detergent and Rinse Agent Dispenser

Filling the Detergent Dispenser

⚠ WARNING

- Always store your detergent in locations which are cool, dry, and out of the reach of children.
- Check that the detergent dispenser is empty after the completion of each wash program.
- Dishwasher detergents can be dangerous if inhaled or swallowed. Avoid contact with skin and eyes; keep children and people in poor health away from the dishwasher when the door is opened. Consult a doctor immediately if detergent has been swallowed or inhaled.

⚠ NOTICE

- Only use detergents suitable for dishwashers.
- **DO NOT** use detergent in Rinse/Hold cycle.
- **DO NOT** forget to pour/put the detergent into the dispenser before turning on the machine.
- Too much detergent may mean that the detergent does not dissolve properly and dishes could get scratched.
- Too much detergent in soft water may cause glass corrosion. **DO NOT** use too much detergent if your water supply is soft.

If you do not know the hardness of your water supply, use 15 ml/3 tsp. detergent. Increase the amount of detergent if you see white water marks, especially on the surface of the glassware. Find out the hardness of your water supply by asking your local water department, water softener company, or county extension agent.

Operating the Dishwasher

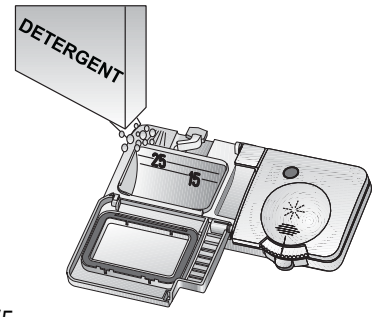

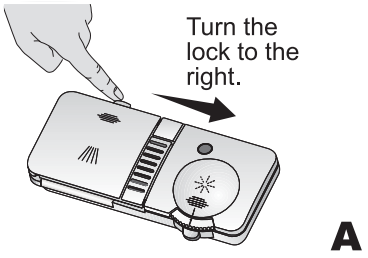

A

- Open the detergent container by pushing the lock to the right **A**.
- Pour/put the detergent into the dispenser.
- Close the lid until it clicks in.
- The detergent container holds a total of 40 ml/8 tsp. of detergent
- Marking lines on the inside of the detergent container aid in providing the correct amount of detergent. When the dishwasher is fully loaded and the dishes are very dirty, we recommend filling the detergent container up to the 25 ml/5 tsp. mark. When the dishes are less dirty, it is generally sufficient to fill the detergent up to the 15 ml/3 tsp. mark.
- The detergent amounts for the individual cleaning programs are shown in the Program Table on page 21.
- Fill amounts given are for standard powder detergent. Amounts may vary if you use liquid or concentrated power detergent. Tablet detergents should be placed in detergent container 1 with the cover closed.
- Follow instructions on the package of the detergent when using liquid dishwasher detergent, concentrated powder detergent, or tablet detergent.
- Deviations are possible depending on how dirty the dishes are and how hard the water is in your location.
- If your dishes have been in the dishwasher for some time without being washed, also fill the smaller container 2 up to the top.

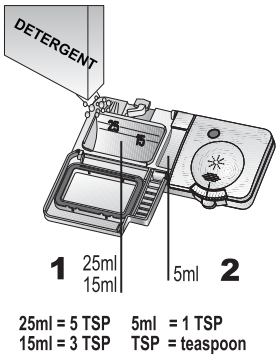

Filling the Rinse Agent Dispenser

⚠ WARNING

Keep your rinse agents out of the reach of children. Ingestion or inhalation of rinse agent may cause serious injury. Avoid contact with skin and eyes, and keep children and people in poor health away from rinse agents

⚠ NOTICE

- Only use rinse agents suitable for use in dishwashers. Rinse aids allow washing water to rinse off more cleanly and prevent watermarks or streaks on the dishes.
- If you use "2 in 1" or "3 in 1" detergents/tabs, you do not need additional rinse agent.

- Open the rinse agent dispenser by pressing the lock **B**.
- Carefully pour in rinse agent to the MAX mark.
- Close the lid until it clicks in **3**.
- Carefully wipe off spilled rinse agent. Excessive rinse agent causes excessive foam formation, which may hinder cleaning.

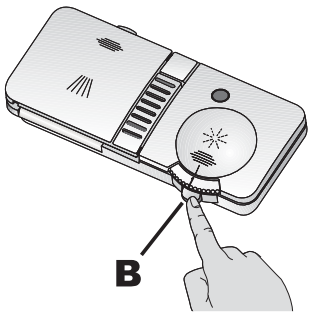

Set the Dose of Rinse Agent

The dose of rinse agent to be used can be set by means of the dispenser regulator **4** between levels 1 and 6. Change the setting, only if the following applies after washing:

- Watermarks are visible on the dishes: Set dosage higher.
- Streaks are visible on the dishes: Set dosage lower.

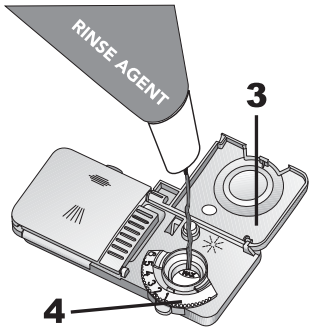

Setting the Water Softener (select models)

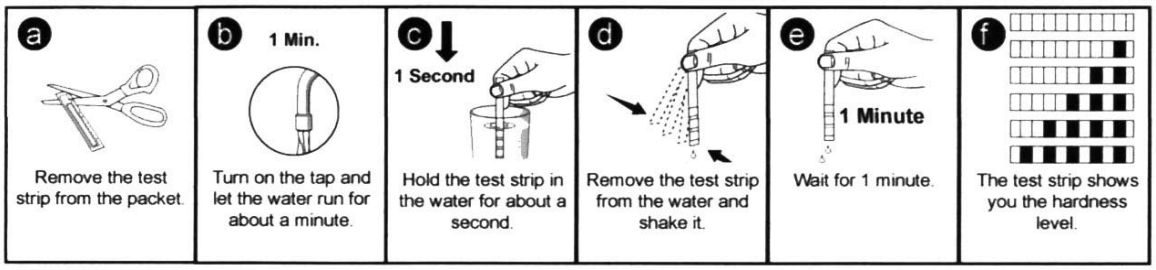

- Press the Program Selection button before you switch the appliance on and keep this button pressed down.
- Switch the appliance on using the On/Off button; then release the switch.
- Release the Program Selection button when the water hardness level stored on your machine is displayed in "r....." format.
- Start/Stop icon will start flashing as soon as the water hardness level store on your machine.
- Water hardness can be set to the desired level by pressing the Time Delay button (compare the test strip with the degrees of Hardness Table). The appropriate program lights up.
- Once you have set the hardness level, press the Program Selection button to save the value. The control indicator on the Program Selection button now lights up permanently.
- Press the On/Off button to save the setting.

Name of Unit	American	PPM	French	Indicator in the Multi-Function display
Definition	1 grain of $CaCO_3$/ 1 gal (US) of water (Hardness °dE)	1 mg of CaO/ 1 L of water	1 mg of CaO/ 1 L of water (Hardness °dF)	
1st Level	0-6	0-80	0-8	Press the Time Delay button to switch the water hardness level to position 1. r1
2nd Level	7-12	81-130	9-13	
3rd Level	13-18	131-220	14-22	Press the Time Delay button to switch the water hardness level to position 2. r2
4th Level	19-23	221-270	23-27	Press the Time Delay button to switch the water hardness level to position 3. r3
5th Level	24-36	271-340	28-34	Press the Time Delay button to switch the water hardness level to position 4. r4
6th Level	37-47	341-800	35-90	Press the Time Delay button to switch the water hardness level to position 5. r5

⚠ NOTICE

- If the water hardness level is less than 7 American odE or less than 8 French odF, you do not need any special softening salt. In this case, the "salt" control indicator lights up continually.
- If your local hardness level exceeds 47 American odE or 90 French odF , you should consider getting a water softening device for your dishwasher. If you use stream water or rainwater, you are advised to install filters.
- If the water hardness adjustment is set to level 1, the "salt" control indicator illuminates continuously although it is not necessary to use salt. If you use salt under this condition, salt will not be consumed and the lamp will not illuminate.
- If you move, do not forget to adjust the water hardness level to suit your new neighborhood.
- If the model does not have a salt dispenser, ignore this changes. Water hardness level must be in position 1.

Filling the Dishwasher Salt Dispenser

⚠ CAUTION

Never use culinary or table salt. These types of salt do not dissolve in water easily and will damage the function of the softening device.

⚠ NOTICE

- Only use special dishwasher salt in your machine to soften the water.
- **DO NOT** use coarse-grained salt. Small grains or powdered salt is more easily soluble.
- The manufacturer is not liable for damages resulting from the use of the wrong type of salt.

- Remove the lower rack from the machine.
- Open the screw-in cap of the salt container by turning it counterclockwise (Fig. **A, B**).
- When operating for the first time: Pour 1 liter of water into the salt container (Fig **C**).
- Pour the salt into the container with the aid of the supplied salt funnel (Fig. D). Pour in enough salt to fill the container. The container holds approximately 2 kg/4.4 pounds.
- Close the cap tightly.

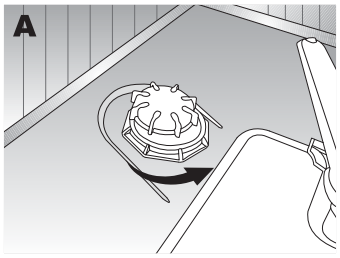

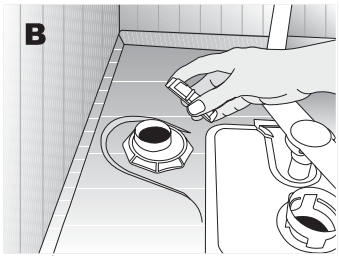

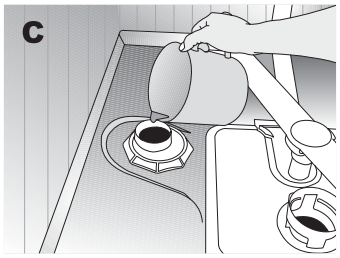

⚠ CAUTION

Begin any wash program immediately after filling the salt container. The washing program prevents damage to the machine which may be caused by any spilled salt solution.

After the first washing cycle, the salt level indicator light will go out.

⚠ CAUTION

Cleaning your dishwasher at regular intervals ensures longer product life and reduces the risk of recurring problems. Always disconnect the power to machine before cleaning.

⚠ WARNING

- Before cleaning or carrying out maintenance, switch off the appliance, disconnect the mains plug, and turn off the water tap.
- **DO NOT** repair or replace any part of the dishwasher or attempt any servicing unless specifically recommended by this manual. We recommend that the dishwasher only be repaired by an authorized service agent.

⚠ CAUTION

- To avoid the possibility of slipping, keep the floor around the dishwasher clean and dry.
- Keep your appliance free from the accumulation of combustible materials, such as lint, rags, and chemicals.
- If the dishwasher is not in use for an extended period of time, we recommend you check that the baskets are empty, leave the inside of the dishwasher clean, the door cracked open to allow air to circulate, and turn off both the power and water supply to the dishwasher.

Caring for Your Dishwasher Exterior

⚠ CAUTION

Possible dishwasher damage: Abrasive cleaners, scouring pads, abrasive cloths (paper towels) can damage the dishwasher door.

Cleaning the Control Panel
Use only soft cloth that is lightly dampened with mild detergent. Clean the control panel only with a moist cloth and clear water.

Cleaning the Colored Doors
Use only light cloth that is lightly dampened with mild detergent.

Cleaning the Stainless Steel Doors
Use a soft cloth with a cleaner made for cleaning stainless steel. For the best results, apply the stainless steel cleaner to a soft cloth and wipe the surface in the direction of the grain. DO NOT use abrasive cleaners or cleaners containing bleach.

Cleaning the Door Gasket
Regularly clean the door gasket with a damp cloth to remove food particles and other debris. Use a gentle household cleaner for the outside and the door seals, and rinse thoroughly.

Caring for Your Dishwasher Interior

⚠ CAUTION

When cleaning the underside of the main filter, care must be taken on the sharp outer edge to avoid the risk of cut type injuries.

⚠ WARNING

If your dishwasher is equipped with interior lighting, replacement should only be done by an authorized service agent.

Cleaning the Filters

Clean the filters and the spray arms regularly. Check if food residues are left on the filters. If there are food residues on the filters, take them out and clean well under running water. A dirty dishwasher will have a negative effect on the cleaning results.

⚠ CAUTION

DO NOT operate your dishwasher without a filter. You will damage your machine. Ensure that your filters are correctly installed.

- Remove the lower rack from the machine.
- Turn the coarse filter counterclockwise to the left and pull it out in an upward direction **A**.
- Pull out the metal/plastic filter (3) from the seating **B.**
- Press on the two tabs of the coarse filter inwards and remove from the microfilter **C**.
- Clean the filters thoroughly under running water. Use a brush if necessary.
- Replace metal / plastic filter..
- Replace the the coarse filter into the microfilter. Make sure that it is properly seated. ***NOTE:*** Incorrect placement of the filters will reduce washing efficiency.
- Twist it clockwise until it clicks into place.

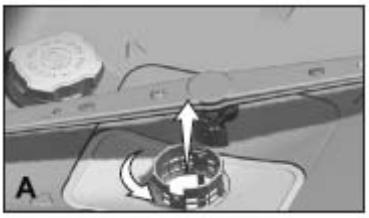

Cleaning the Spray Arms

⚠ NOTICE

Dirt and/or calcium residue may block the nozzles on the spray arms. For this reason, regularly check the spray nozzles.

1 Lower spray arm
2 Upper spray arm

- Remove the lower rack from the machine.
- Pull off the lower spray arm in an upward direction **A**.
- Loosen the fastening screw of the upper spray arm and pull off the spray arm B by a downward motion.
- Clean the spray arms under running water.
- Replace the lower spray arm in a downward direction.
- Replace the upper spray arm and tighten the fastening screw by turning it around to the left.
- Insert the lower rack.

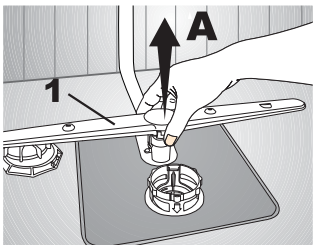

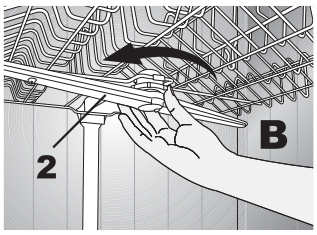

⚠ CAUTION

Made sure the fastening screw is tight on the upper spray arm.

Check if the holes on the top of the third spray arm are clogged. If they are clogged, remove and clean them.

To remove them, slightly push them upwards (1) and then turn clockwise (2).
To replace the impeller, seat it into its slot, push slightly upwards and turn it counter clockwise until it is securely fitted. When the impeller is released, check if it rotates without any obstruction.

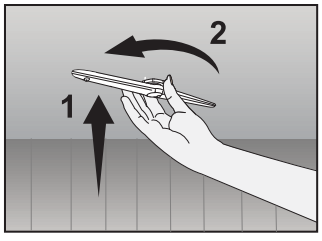

Troubleshooting

Poor wash results may not always be caused by the dishwasher. Please review the following Troubleshooting Charts for possible remedies. You may find the proper solution without having to call a service provider.

Problem	Possible Cause and/or Remedy
Dishwasher does not start	Is the machine plugged in? Are all fuses operative? Is the water supply fully turned on? Is the dishwasher door closed securely? Have you pressed the On/Off button?
Dishwasher starts but fails to circulate water within 5 seconds	Cancel the program by pressing the Start/Pause button for 5 seconds.
What if the "S:an" is not displayed on the screen?	Dishwasher cycle was interrupted or the water did not reach required temperature.
Door will not stay down in open position	Adjust door spring tension (custom panel models only, see Installation Guide).
Dishes are not dry	Improper loading: Load the dishwasher as suggested in this manual. Insufficient rinse agent supply: Increase the dosage amount of rinse agent and/or refill the rinse agent dispenser. Dishes are removed too soon: Do not empty your dishwasher immediately after washing. Open the door slightly so that the steam can escape. Begin with unloading the dishwasher when the dishes are only hand warm. Empty the lower rack first. This prevents water from dripping off dishes in the upper rack. Wrong program selection: In short period programs, the wash temperature and therefore the cleaning performance is lower. Choose a program with a longer washing time. Washing cutlery with worn surface: Evaporation of water is more difficult with these items. Cutlery or dishes of this type are not suited for dishwashers.
Tea, coffee, or other stains	Wrong program selection: Select a program that washes at a higher temperature or takes a longer amount of time. Detergent is moist or clumping in box: Bleaches in cleaners lose their efficiency when stored under unfavorable conditions. Store detergents in a dry location. Close the lid of the container securely. Using cutlery with a low surface quality: Cleaning of these items is made difficult by their poor surface structure. Cutlery or dishes of this type are not for dishwashers.
Dishes break	Improper loading. Load the dishwasher as suggested in this manual. Overloaded racks. Do not overload the dish rack. Dishes may hit against each other and break.

Troubleshooting

Problem	Possible Cause and/or Remedy
Dishes are not clean	Improper loading: Load the dishwasher as suggested in this manual. Wrong program selection: Select a program that washes at a higher temperature or takes a longer amount of time. Spray arms are not turning: Check if the spray arms are blocked from moving freely. Clogged filters: Clean all filters as described in this manual. Filters are not placed in their proper positions: Check if all filters are placed in their proper positions. Spray arm nozzles are clogged: Clean the spray arms as described in this manual. Overloaded racks: Do not overload the racks. Detergent is moist or clumping in box: Store detergents in a dry location. Close the lid of the container securely. Too little detergent: Increase the amount of the detergent as per the program table. Too little rinse agent: Increase the amount of rinse agent and/or refill the rinse agent dispenser. The lid of the detergent dispenser remained open: Always ensure that you close the detergent dispenser lid after pouring in the detergent. Washing cutlery with worn surface quality: Cutlery of this type is not suited to dishwashers.
Calcium streaks, misty appearance	Insufficient rinse agent supply: Increase the dosage amount of rinse agent and/or refill the rinse agent dispenser. The hardness is not selected properly; too little salt is being used: Call water supplier and ask for local hardness in grains per gallon or ppm. Salt loss (models with salt container): Check whether the lid of the salt container is firmly closed. Use the funnel to pour in special salt. Begin the Rinse and Hold program right after filling in salt. After the program is complete, check whether the lid may have loosened.
Fading of glasses, china, porcelain pattern	Fading of decoration on glasses and porcelain: Glasses, porcelain, and cutlery of this type are not suited for the dishwasher.

Troubleshooting

Problem	Possible Cause and/or Remedy
Smell	Smell of new machine: The smell of a new machine disappears after a few wash cycles with detergent. Filters are dirty: Clean all filters as described in this manual. Dirty dishes standing in the machine for a few days without being washed: Remove coarse dirt under running water and run the Rinse and Hold program every two days without detergent. Dirty door gasket: Regularly clean the door gasket with a damp cloth to remove food particles and other debris. Use a gentle household cleaner for the outside and the door seals, and rinse thoroughly.
Milky appearance or rainbow on the glasses (glass corrosion)	Excessive use of detergent when water hardness is low: •Add a smaller amount of detergent. •Compare the water hardness level setting on the dishwasher against the stated values from the local water supplier. •When water hardness is low (below 7 degree of hardness or 106 parts per million), **DO NOT** use salt even if your dishwasher has a water softener.
Rust stains, destruction of the surface	The lid of the salt container is not closed securely. Salt loss (models with salt container): •Salt can destroy metal surfaces and cause rust damage. •Check whether the lid of the salt container is firmly closed. Use the funnel to pour in special salt. Begin the Rinse and Hold program right after filling in salt. After the program is complete, check whether the lid may have loosened. Food leftovers are staying on the dishes for too long: Remove coarse dirt under running water and carry out the Rinse and Hold program every two days without detergent. The machine is not grounded properly: Check the grounding of the system. Static electricity may eat holes into metal and cause irreparable damages to surfaces. Cutlery parts from low-grade rust-free steel: Rust on such items cannot be avoided. Cutlery or dishes of this type are not suited for the dishwasher. Dish items with rust stains: Rusty dishes may "infect" other items. Cutlery or dishes of this type are not suited for the dishwasher.
Water remains inside the machine after the rinse cycle.	Clean all filters as described in this manual. Ensure that the drain hose is properly placed and open.
Foam	The dishes are pre-washed by hand with a large amount of dish detergent: Dishes do not need to be pre-washed. Coarse dirt may be removed with a dishcloth, or you may hold the dishes under running water. Rinse agent has accidentally leaked into the machine: If rinse agent has been spilled during refilling, remove the agent using a paper cloth or sponge. The cover of the rinse agent dispenser is not closed securely: Always take care to ensure that the lid is closed after refilling the rinse agent dispenser.

Troubleshooting

Problem	Possible Cause and/or Remedy
Detergent residue remains in the dispenser.	Moisture in the detergent dispenser. Ensure that the detergent dispenser is dry before filling it. Detergent stays in the dispenser for too long. Pour the detergent in just before washing. The lid of the detergent dispenser does not open. When loading the dishwasher, take care to ensure that you do not accidentally block detergent cup with large dishware or utensils. Detergent is moist or clumping in box. Store detergents in a dry location. Close the lid of the container carefully. Spray arm nozzles are clogged. Clean the spray arms as described in this manual. Spray arms are blocked by dishware. Make sure spray arms rotate freely. Was the cycle terminated early? Terminating the cycle early can leave detergent residue in the dispenser.
Scratched dishes	Dish items/parts made from aluminum: Dishes and cutlery of this type are not suited for the dishwasher. The lid of the salt container is not closed securely. Salt loss (models with salt container): Check whether the lid of the salt container is firmly closed. Use the funnel to pour in special salt. Begin the Rinse and Hold program right after filling in salt. After the program is complete, check whether the lid may have loosened. The hardness is not selected properly; too little salt is being used: Call water supplier and ask for local hardness in grains per gallon or ppm. Adjust the water hardness level setting accordingly. Detergents are being stored under unfavorable conditions: Detergents should not be stored longer than two months in open packages. Store detergents in a dry location. Close the lid of the container carefully. Overloaded racks: Take care to ensure that individual glasses and dishes do not touch. They may hit against each other during the washing process, causing scratches.

Service Information

If service is required, call your authorized service agency.

Have the following information readily available.

- Model number
- Serial number
- Date purchased
- Name of dealer from whom purchased

Clearly describe the problem that you are having. If you are unable to obtain the name of an authorized service agency, or if you continue to have service problems, contact Viking Range, LLC at 1-888-845-4641, or write to:

VIKING RANGE, LLC
PREFERRED SERVICE
111 Front Street
Greenwood, Mississippi 38930 USA

Record the information indicated below. You will need it if service is ever required. The model and serial numbers are located on an identification label attached to the left side of the tank. For access, simply open the door of the dishwasher.

Model no. _____ Serial no._____

Date of purchase _____ Date installed_____

Dealer's name _____

Address _____

_____

If service requires installation of parts, use only authorized parts to insure protection under the warranty.

Keep this manual for future reference.

Warranty

BUILT-IN DISHWASHERS WARRANTY
ONE YEAR FULL WARRANTY

Built-in dishwashers and all of their component parts, except as detailed below*†, are warranted to be free from defective materials or workmanship in normal residential use for a period of one (1) year from the date of original retail purchase. Viking Range, LLC, warrantor, agrees to repair or replace, at its option, any part which fails or is found to be defective during the warranty period.

***FULL NINETY (90) DAY COSMETIC WARRANTY:** Product is warranted to be free from cosmetic defects in materials or workmanship (such as scratches on stainless steel, paint/porcelain blemishes, etc.) for a period of ninety (90) days from the date of original retail purchase or closing date for new construction, whichever period is longer. Any defects must be reported to the selling dealer within ninety (90) days from date of original retail purchase. Viking Range, LLC uses high quality processes and materials available to produce all color finishes. However, slight color variation may be noticed because of the inherent differences in painted parts and porcelain parts as well as differences in kitchen lighting, product locations, and other factors. Therefore, this warranty does not apply to color variation attributable to such factors.

†FULL NINETY (90) DAY WARRANTY IN "RESIDENTIAL PLUS" APPLICATIONS: This full warranty applies to applications where use of the product extends beyond normal residential use, but the warranty period for products used in such applications is ninety (90) days. Examples of applications covered by this warranty are bed and breakfasts, fire stations, private clubs, churches, yachts, etc. Under this "Residential Plus" warranty, the product, its components and accessories are warranted to be free from defective material or workmanship for a period of ninety (90) days from the date of original retail purchase. This warranty excludes use of the product in all commercial locations such as restaurants, food service locations and institutional food service locations.

FIVE YEAR LIMITED WARRANTY ON NYLON RACKS, ELECTRONIC CONTROLS, MOTOR/PUMP ASSEMBLY, AND WATER DISTRIBUTION SYSTEM COMPONENTS

Any upper and/or lower nylon rack which rusts through due to defective materials or workmanship and any electronic controls which fail due to defective materials or workmanship in normal household use during the fourth through fifth year from the date of original retail purchase will be repaired or replaced, free of charge for the part itself, with the owner paying all other costs, including labor. Any motor/pump assembly or water distribution system component as listed below which fails due to defective materials or workmanship in normal household use during the fourth through fifth year from the date of original retail purchase will be repaired or replaced, free of charge for the part itself, with the owner paying all other costs, including labor.

Motor/Pump and Water Distribution System Components:

Circulation motor/pump
Lower wash arm
Drain motor/pump
Tube to upper wash arm
Fill valve
Upper wash arm
Diverter

LIFETIME LIMITED WARRANTY ON STAINLESS STEEL TANK AND LINER

Any stainless steel tank or inner door liner which develops a water leak due to defective materials or workmanship in normal household use during the lifetime of the product will be repaired or replaced, free of charge for the part itself, with the owner paying all other costs, including labor. This warranty excludes surface corrosion or rust, scratches, discoloration, water or atmospheric conditions, or cleaning practices which are part of normal residential use.

TERMS AND CONDITIONS

This warranty extends to the original purchaser of the product warranted hereunder and to each transferee owner of the product during the term of the warranty and applies to products purchased and located in the United States, Canada, Mexico and the Carribbean (excluding the Dominican Republic, Cuba, and Haiti). Products must be purchased in the country where service is requested. If the product or one of its component parts contains a defect or malfunction during the full warranty period after a reasonable number of attempts by the warrantor to remedy the defect or malfunction, the owner is entitled to either a refund or replacement of the product or its component part or parts.

Replacement of a component part includes its free installation, except as specified under the limited warranty. Under the terms of this warranty, service must be performed by a factory authorized Viking Range, LLC service agent or representative. Service will be provided during normal business hours, and labor performed at overtime or premium rates shall not be covered by this warranty.

Owner shall be responsible for proper installation, providing reasonable and necessary maintenance, providing proof of purchase upon request, and making the appliance reasonably accessible for service. The return of the Owner Registration Card is not a condition of warranty coverage. You should, however, return the Owner Registration Card so that Viking Range, LLC can contact you should any question of safety arise which could affect you.

This warranty gives you specific legal rights, and you may also have other rights which may vary from jurisdiction to jurisdiction.

WHAT IS NOT COVERED BY THIS WARRANTY: This warranty shall not apply to damage resulting from abuse, failure to provide reasonable and necessary maintenance, accident, delivery, negligence, natural disaster, loss of electrical power to the product for any reason, alteration, outdoor use, improper installation, improper operation, or repair or service of the product by anyone other than an authorized Viking Range, LLC service agency or representative. This warranty does not apply to commercial usage.

LIMITATION OF REMEDIES AND DURATION OF IMPLIED WARRANTY

OWNER'S SOLE AND EXCLUSIV7E REMEDY FOR A CLAIM OF ANY KIND WITH RESPECT TO THIS PRODUCT SHALL BE THE REMEDIES SET FORTH ABOVE. VIKING RANGE, LLC IS NOT RESPONSIBLE FOR CONSEQUENTIAL OR INCIDENTAL DAMAGE, INCLUDING BUT NOT LIMITED TO FOOD OR MEDICINE LOSS, DUE TO PRODUCT FAILURE, WHETHER ARISING OUT OF BREACH OF WARRANTY, BREACH OF CONTRACT OR OTHERWISE. Some jurisdictions do not allow the exclusion or limitation of incidental or consequential damages, so the above limitation or exclusions may not apply to you. Any implied warranties of merchantability or fitness for a particular purpose applicable to this product are limited in duration to the period of coverage of the applicable express written limited warranties set forth above. Some states do not allow limitations on how long an implied warranty lasts, so the above limitation may not apply to you.

WARRANTY SERVICE

To obtain warranty service, contact an authorized service agent, or Viking Range, LLC, 111 Front Street, Greenwood, Mississippi 38930, (888) 845-4641. Provide model and serial number and date of original purchase or closing date for a new construction. For the name of your nearest authorized Viking Range, LLC service agency, call Viking Range, LLC.

IMPORTANT: Retain proof of original purchase to establish warranty period.

Specifications subject to change without notice.

Viking Range, LLC
111 Front Street
Greenwood, Mississippi 38930 USA
(662) 455-1200

For more product information, call 1-888-845-4641
or visit our web site at www.vikingrange.com in the US
or brigade.ca in Canada

F21465B EN (060116)