1000 CFM Remote Blower
VTR1030W

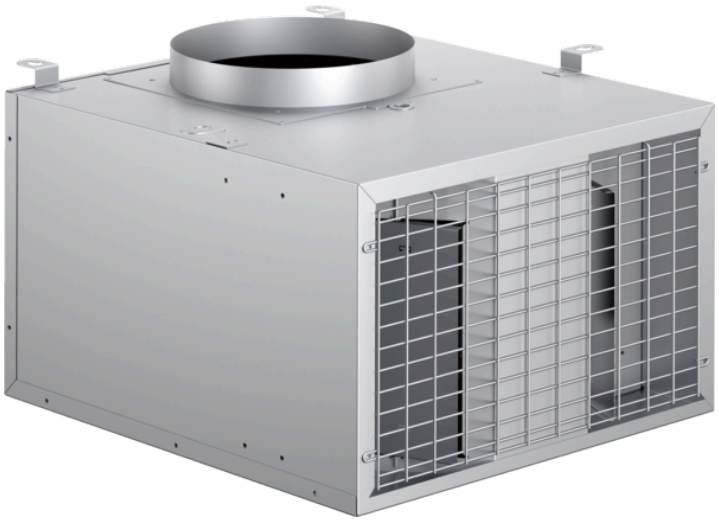

Product Features

Notes: Please refer to installation instructions. Installation instructions are available at www.thermador.com. Specifications are correct at the time of printing. Thermador reserves the right to change product specifications and design at any time, without notice.

1 800 735 4328 | WWW.THERMADOR.COM | 1901 Main Street, Suite 600 Irvine, CA 92614

©2018 BSH HOME APPLIANCES CORPORATION, ALL RIGHTS RESERVED LITHO DATE: 09/2018

1000 CFM Remote Blower
VTR1030W

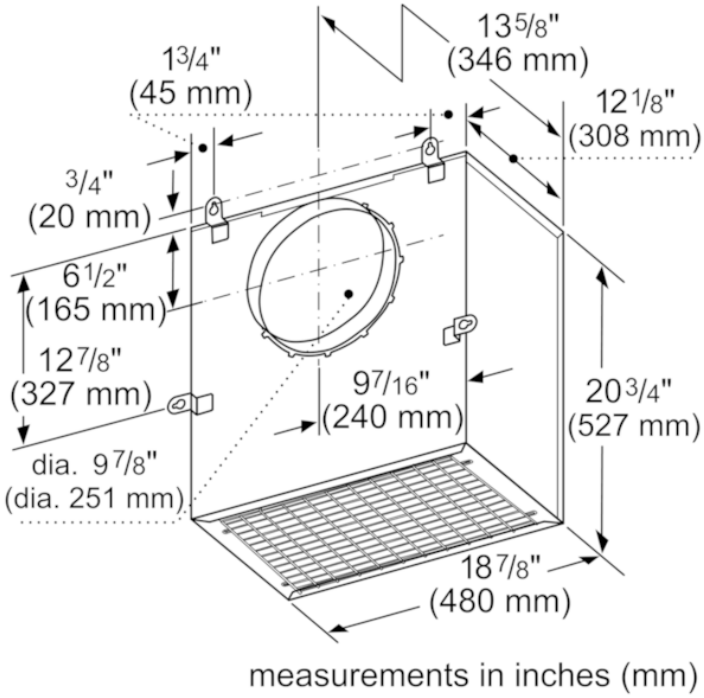

Product Features

Product group	Accessory
Brand	Thermador
SKU	VTR1030W
Internal article number	VTR1030W
EAN code	825225941279
Product packaging dimensions (HxWxD) (in)	17 11/16" x 23 2/8" x 26 3/4"
Net weight (lbs)	45
Gross weight (lbs)	47
UPC code	825225941279
Name of product image	MCSA02216265_i7492_1622057_VTR1030W_PAK_

Technical Specification

Notes: Please refer to installation instructions. Installation instructions are available at www.thermador.com. Specifications are correct at the time of printing. Thermador reserves the right to change product specifications and design at any time, without notice.

1 800 735 4328 | WWW.THERMADOR.COM | 1901 Main Street, Suite 600 Irvine, CA 92614

©2018 BSH HOME APPLIANCES CORPORATION, ALL RIGHTS RESERVED LITHO DATE: 09/2018