INSTALLATION INSTRUCTIONS

Frameless cabinetry
ActiveSmart™ Built-in refrigerator

RS36A80JC DCS and
RS36A80UC DCS models

US CA

www.dcsappliances.com

841337 B 08.15

FOLLOW THE INSTALLATION SEQUENCE RELEVANT TO YOUR CABINETRY

NOTE: PRODUCT IS DESIGNED FOR FLUSH INSET INSTALLATION ONLY

RS36A80JC DCS and
RS36A80UC DCS models

FRAMELESS CABINETRY

(Frameless: Aligns the product with the cabinetry)

Note: shown with custom panel attached to fridge

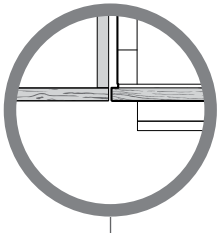

1. SAFETY AND WARNINGS
2. BEFORE INSTALLATION
3. COMPONENTS LIST
4. MAXIMUM DISTANCE OF HOSE AND POWER CORD
5. PRODUCT AND CAVITY DIMENSIONS
6. CAVITY PREPARATIONS
7. CUSTOM DOOR PANEL DIMENSIONS

8. **80” CAVITY**
   (2032 mm)
   ATTACH ANTI-TIP BRACKET

OR

8. **84” CAVITY**
   (2134 mm)
   ATTACH ANTI-TIP BRACKET
   ATTACH TOP TRIM

9. ATTACH SIDE BASE BRACKETS AND INSTALLATION AIDERS
10. CONNECT TO WATER AND ELECTRICAL SUPPLY
11. PRE-ALIGNING YOUR PRODUCT
12. TEMPORARILY FIXING YOUR PRODUCT AND ATTACHING DOOR STUDS
13. INSTALL WATER FILTER CARTRIDGE AND KICKSTRIPS
14. ASSEMBLE DOOR PANEL SET
15. HANGING ICE & WATER DOOR PANEL
16. HANGING NON-WATER DISPENSING DOOR PANELS
17. ICE AND WATER INITIATION
18. ATTACH FIXING BRACKETS
19. ATTACH COVERS AND TOE KICK
20. ATTACH BOTTOM KICKSTRIP
21. ATTACH SIDE TRIM BRACKETS
22. ATTACH SIDE TRIMS
23. ADJUSTING HINGE TENSIONING SCREWS
24. FINAL CHECKLIST

FRAMED CABINETRY

(Framed: Aligns the product with the frame of the cabinetry)

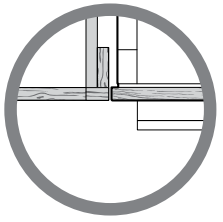

Note: shown with custom panel attached to fridge

(refer to the flip side of the booklet)

① SAFETY AND WARNINGS

⚠ WARNING!

Electric Shock Hazard
Read and follow the safety and warnings outlined in this installation instructions guide before operating this appliance.
Failure to do so can result in death, electric shock, fire or injury to persons.

⚠ WARNING!

Cut Hazard
Take care – panel edges are sharp. Failure to use caution could result in injury or cuts.

⚠ WARNING!

This appliance is top-heavy and must be secured to prevent the possibility of tipping forward.

To ensure that the appliance is stable under all loading conditions, the anti-tip bracket and fittings supplied must be installed according to the following installation instructions by a professional installer.

② BEFORE INSTALLATION

Please follow the installation steps below to ensure your appliance is installed and operates correctly.

Power

- To ensure that the appliance is not accidentally switched off, connect your refrigerator to its own isolating switch. Do not plug in any other appliance at this isolating switch.
- For power requirements, please refer to the information on the serial plate. This is located at the front right-hand side of the drawer when open.
- It is essential that the appliance is properly grounded (earthed).
- Connect the appliance to the electrical supply (115VAC, 60 Hz) with the fitted plug and lead.
- Follow the National Electrical Code and all local codes and ordinances when installing this product.
- Warning: Ground Fault Circuit Interrupters (GFCI) may trip during normal operation of your refrigerator and interrupt the power supply. The use of a GFCI is not recommended with this product.

Location

- Your refrigerator should not be located in direct sunlight or next to any heat generating appliance such as a cooktop, oven or dishwasher.
- Your product is fitted with front and rear rollers designed for moving the product in forwards and backwards direction.
- Avoid moving the product in a sideways direction as this may damage the rollers or the floor covering/surface.

Plumbing

- Your product must be installed by a qualified appliance installer as incorrect plumbing can lead to water leaks.
- DCS by Fisher & Paykel Appliances does not accept responsibility for damage (including water damage) caused by faulty installation or plumbing.

Door panel set

- The standard appliance does not include a door panel set.
- When designing custom door panels, these are only available for non-Water dispensing models.
- To complete the integrated appliance for non-Water dispensing models the customer should supply their own custom door panel set. All the hardware required to mount the door panel sets to the refrigerator doors is supplied.
- DCS by Fisher & Paykel door panel sets are available (Stainless steel door panels, model numbers: RD3680C, RD3680CU, RD3684C and RD3684CU), and can be purchased through your DCS by Fisher & Paykel dealer.

IMPORTANT!

SAVE THESE INSTRUCTIONS

The models shown in this installation guide may not be available in all markets and are subject to change at any time. For current details about model and specification availability in your country, please go to our website www.dcsappliances.com or contact your local DCS by Fisher & Paykel dealer.

③ COMPONENTS LIST

Door panel fittings – Included with standard appliance.

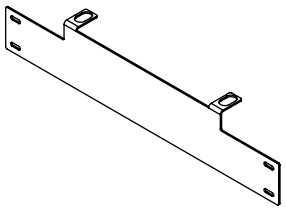

French door hanging bracket (2)

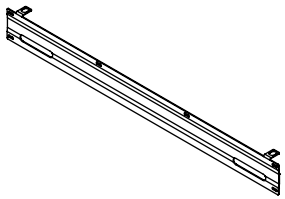

Drawer hanging bracket (1)

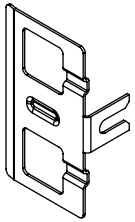

Side bracket (10)

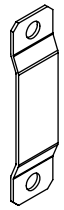

Side strap (10)

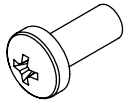

M5 x 10 pan head Phillips screw (10)

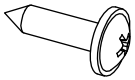

#8 x 16 mush washer screw (46)

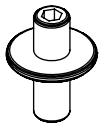

M8 stud (6)

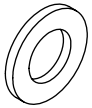

M8 washer (6)

M8 nut (6)

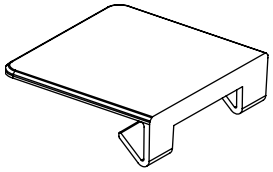

Top cover (4)

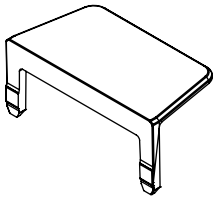

Side cover (10)

Anti-tip bracket fittings – Included with standard appliance.

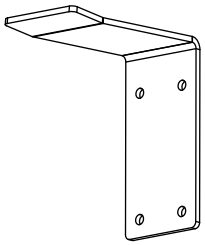

Anti-tip bracket (1)

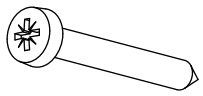

#10 x 40 pan head Phillips screw (4)

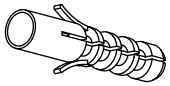

Masonry plug (4)

③ COMPONENTS LIST

Optional accessories – The standard appliance does not include a door panel set.
DCS by Fisher & Paykel door panel sets are available (Stainless steel door panels). To complete the integrated appliance for non-Water dispensing models the customer should supply their own custom door panel set.

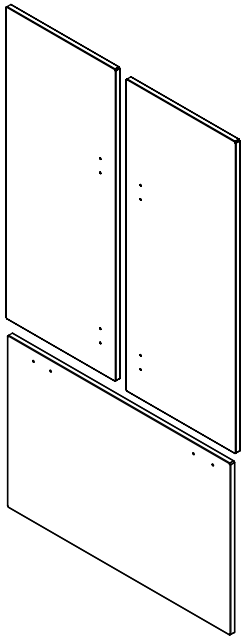

Non-Water dispensing French panels (2)
Drawer panel (1)
Model number: RD3680C and RD3684C

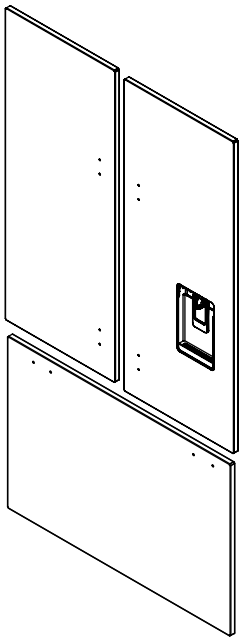

Non-Water dispensing French panel (1)
Ice & Water French panel (1)
Drawer panel (1)
Model number: RD3680CU and RD3684CU

Door handle (2)

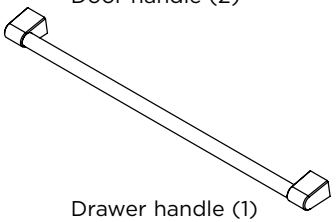

Drawer handle (1)

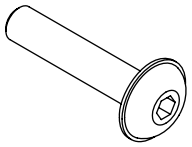

M5 x 25 pan head
socket screw
(12)

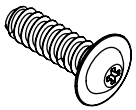

M5 x 14 Mush Phillips SS
(34)

Water fittings – Included with the standard appliance

Collet locking key
(1)

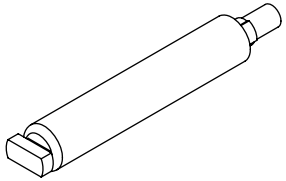

Water filter cartridge (1)
Part number: 81099

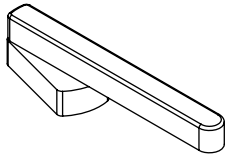

Filter cartridge tool
(1)

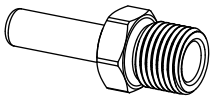

¼" (6 mm) Adaptor
(1)

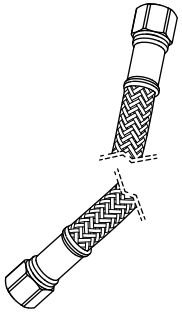

¼" comp. Stainless Steel
braided hose
(1)

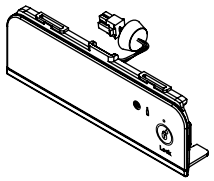

External display module (1)
(included with RS36A80UC DCS
standard appliance)

③ COMPONENTS LIST

Product hardware – Included with standard appliance.

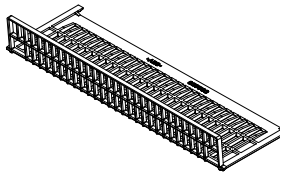

Kickstrip filter
(1)

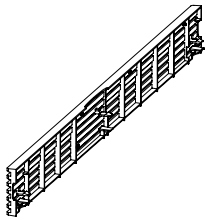

Top kickstrip grille
(1)

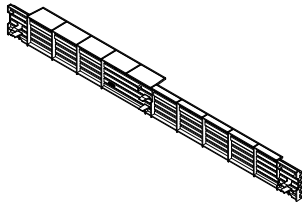

Bottom kickstrip grille
(1)

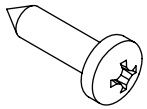

#8 x ⅝" (16 mm)
pan head screw
(3)

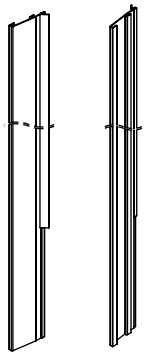

Side trim
(2)

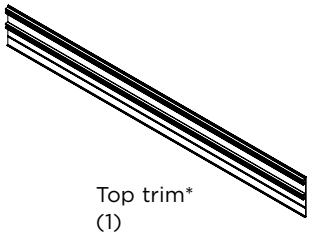

Top trim*
(1)

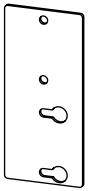

Top trim joining bracket*
(2)

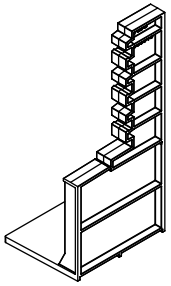

Air divider
(1)

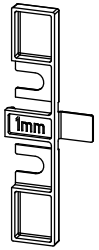

Screw cover
(4)

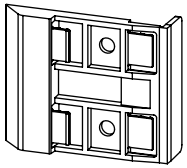

Side trim bracket
(6)

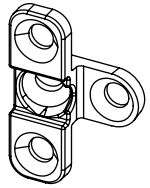

Fixing bracket
(4)

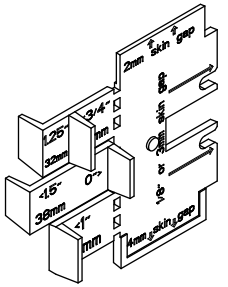

Installation aiders (4)
(required for Frameless cabinetry installation)

M5 nut
(4)

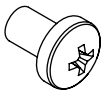

M5 x 8 pan head
Phillips screw
(4)

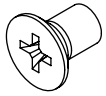

M5 x 8 countersunk
Phillips screw
(12)

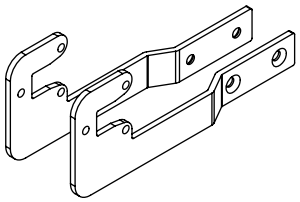

Side base bracket
(2)

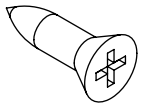

#8 x 19 twin thread screw
(8)

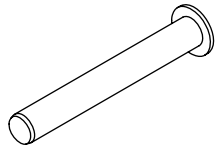

Hinge limiting pin
(1)

*To be used when finished enclosure is 84" (2134 mm).

④ MAXIMUM DISTANCE OF HOSE AND POWER CORD

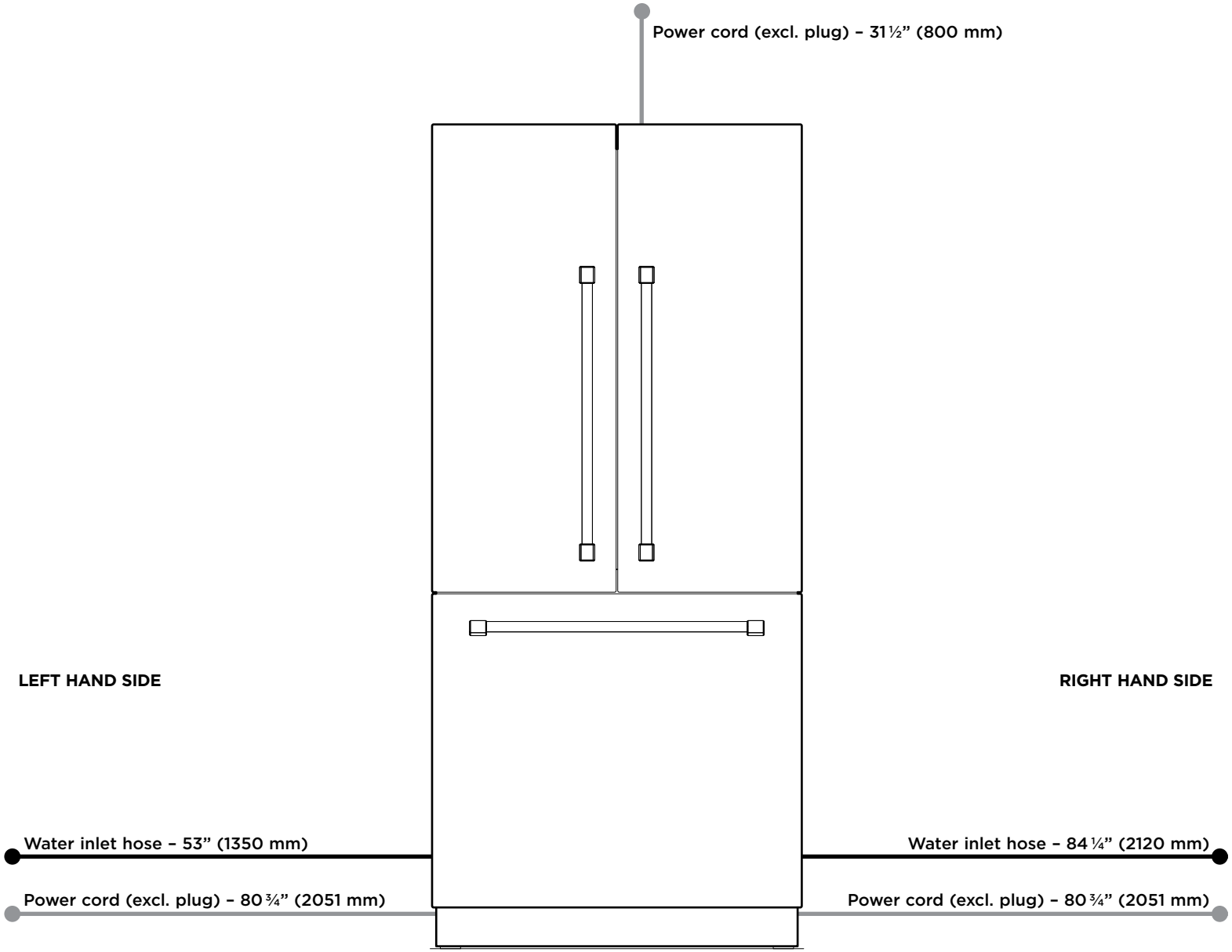

5 PRODUCT AND CAVITY DIMENSIONS

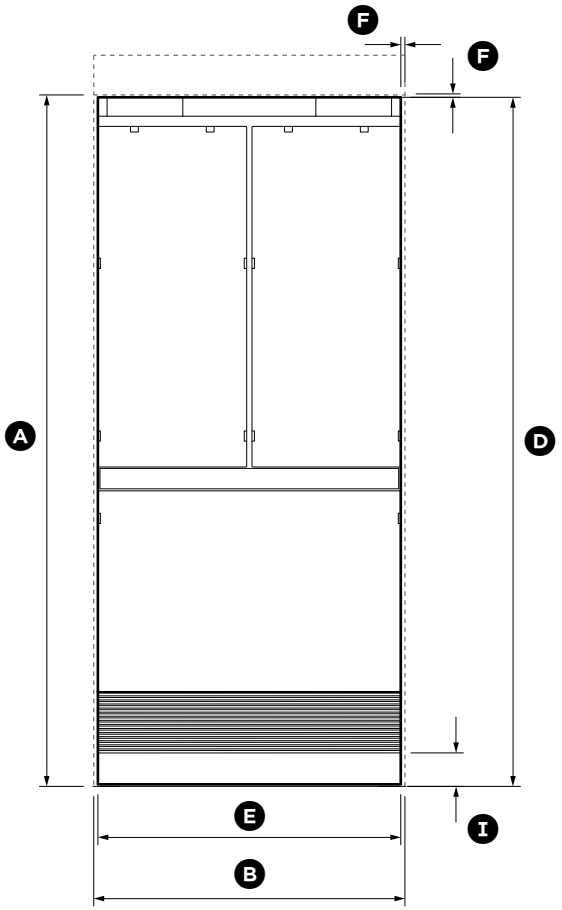

FRONT VIEW

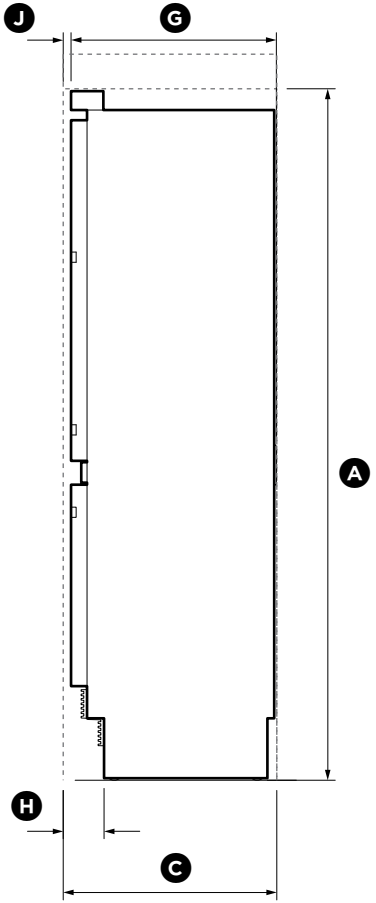

PROFILE VIEW

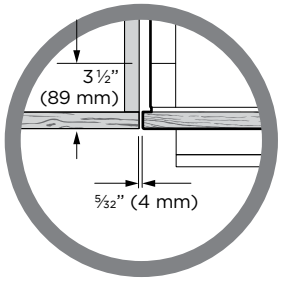

Frameless: Finished return top and sides
Note: shown with custom panel attached to fridge

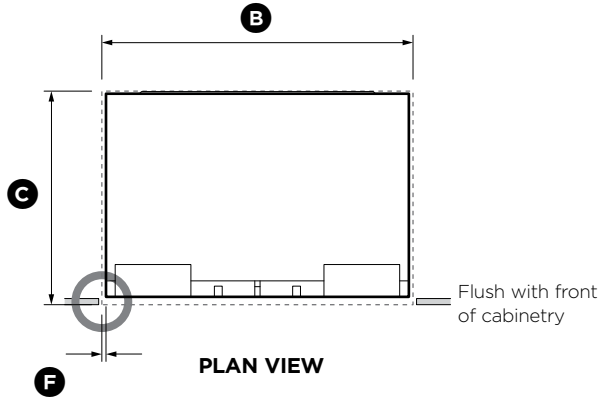

PLAN VIEW

CAVITY DIMENSIONS	inches (mm)
(A) Overall height of cavity	80/84" (2032/2134)
(B) Overall width of cavity	36" (914)
(C) Overall depth of cavity	24¾" (629)

Total front panel width with required gaps at sides = 36" (914 mm). (Refer custom door panel dimensions section – panel width + 2 x (F) cabinetry gaps).

PRODUCT DIMENSIONS	inches (mm)
(D) Overall height of product*	79 27⁄32" (2028)
(E) Overall width of product	35 1⁄32" (890)
(F) Minimum cabinetry gap clearance from edge of custom panels**	5⁄32" (4)
(G) Overall depth of product (excluding front door panels)	23¾" (603)
(H) Depth of toe kick (measured from front of door panels***)	4¾" (120)
(I) Height of toe kick*	4 – 6" (102 – 152)
(J) Depth of product front panels (excludes handles)***	¾" (19)

* Includes mounted feet.

** Refer to custom door panel dimensions section.

***Door panels and toe kick to be manufactured and fitted by cabinetmaker, maximum thickness ¾" (19 mm).

RS36A80JC DCS model shown only.
When designing custom door panels, these are only available for non-Water dispensing models.

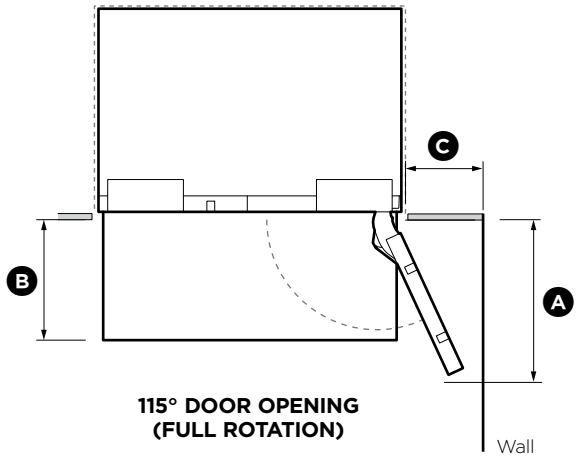

115° DOOR OPENING (FULL ROTATION)

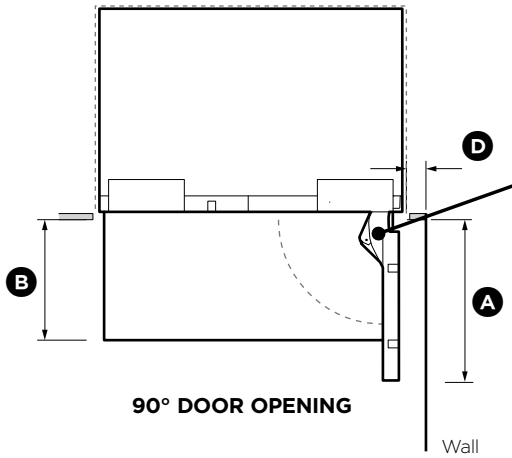

90° DOOR OPENING

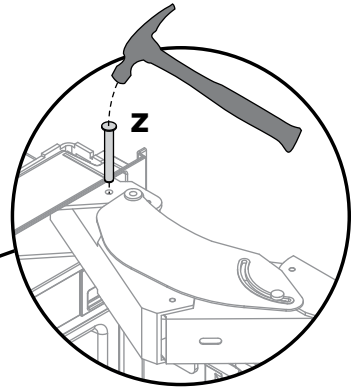

For 90° door swing a hinge limiting pin is supplied with your appliance. This pin fits in the boreholes of the top hinge (refer to **Z**).

WARNING!

Before opening doors to the product, ensure the product is on its base packer and the polystyrene stability blocks are still in place. Failure to follow these instructions could lead to serious injury or death.

1 Open door to 90°.

2 Using a hammer, drive the hinge limiting pin through the boreholes which are now vertically aligned.

DOOR CLEARANCE DIMENSIONS	inches (mm)
(A) Depth of door (widest opening) measured from front of cabinetry	18 29/32" (480)
(B) Depth of drawer (open) measured from front of cabinetry*	14 3/16" (360)
(C) Minimum door clearance** to adjacent wall (115° – full internal access)*	12 13/32" (315)
(D) Minimum door clearance** to adjacent wall (90° – reduced internal access)*	4 11/32" (110)

* Does not include the custom door panels or handles to be manufactured and fitted by cabinetmaker.

** Measured from front cabinetry edge.

⑤ PRODUCT AND CAVITY DIMENSIONS – WITH RD3680C DOOR PANEL SET

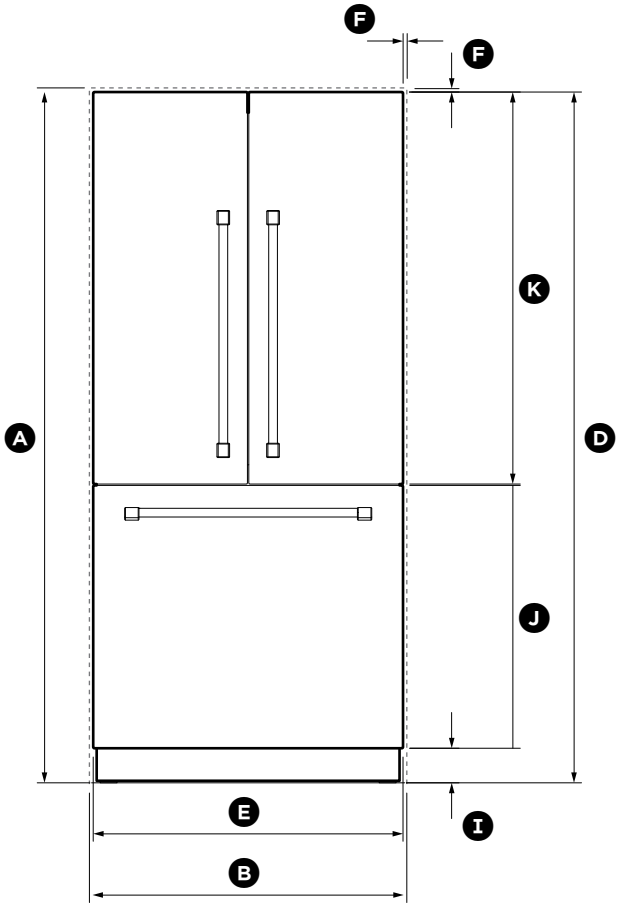

FRONT VIEW

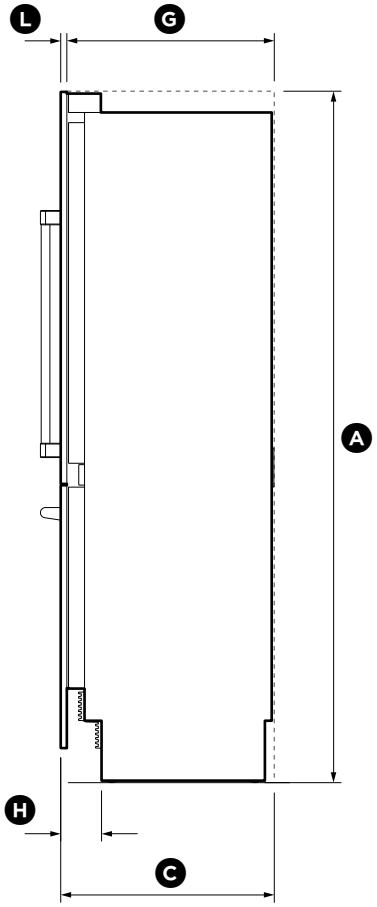

PROFILE VIEW

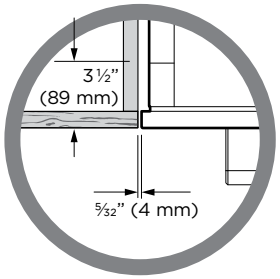

Frameless: Finished return top and sides

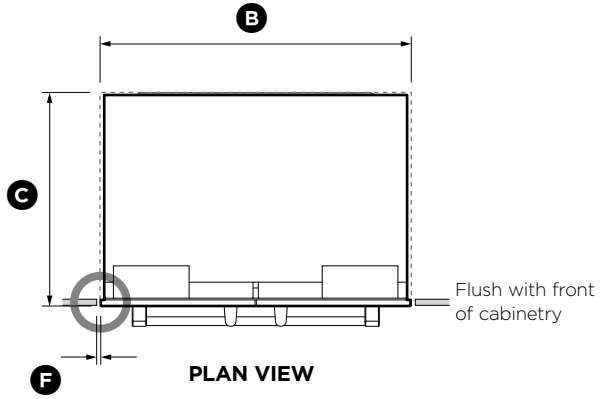

PLAN VIEW

CAVITY DIMENSIONS		inches (mm)
Ⓐ	Overall height of cavity	80" (2032)
Ⓑ	Overall width of cavity	36" (914)
Ⓒ	Overall depth of cavity	24 ¾" (629)

Total front panel width with required gaps at sides = 36" (914 mm) (Ⓔ product width + 2 x Ⓕ cabinetry gaps).
Height of front panels with required gap above = 80" (2032 mm) (Ⓓ product height + Ⓕ cabinetry gap).

PRODUCT DIMENSIONS		inches (mm)
Ⓓ	Overall height of product*	79 27⁄32" (2028)
Ⓔ	Overall width of product	35 21⁄32" (906)
Ⓕ	Minimum cabinetry gap clearance from edge of product	5⁄32" (4)
Ⓖ	Overall depth of product (excluding front door panels)	23 ¾" (603)
Ⓗ	Depth of toe kick (measured from front of door panels)	4 ¾" (120)
Ⓘ	Height of toe kick**	4" (102)
Ⓙ	Height of bottom drawer panel	30 13⁄32" (772)
Ⓚ	Height of top door panels	45 9⁄32" (1150)
Ⓛ	Depth of product front panels (excludes handles)***	¾" (19)

* Includes mounted feet.

** Does not include custom toe kick to be manufactured and fitted by cabinetmaker.

***Optional Stainless steel front panels – Model no. RD3680C (non-Water dispensing model) and model no. RD3680UC (Ice & Water model).

RS36A80JC DCS model shown with RD3680C door panels.

⑤ PRODUCT AND CAVITY DIMENSIONS – WITH RD3684C DOOR PANEL SET

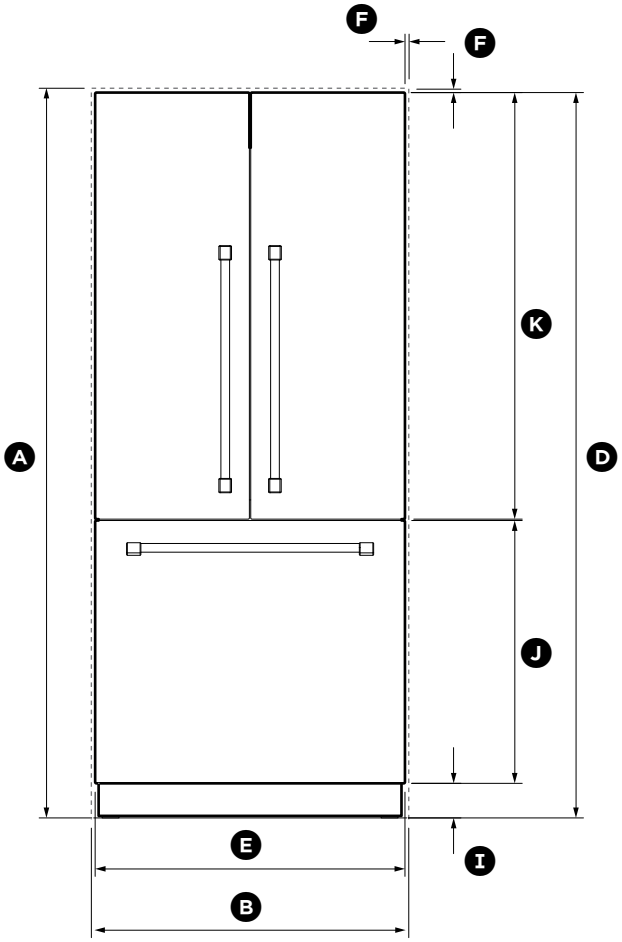

FRONT VIEW

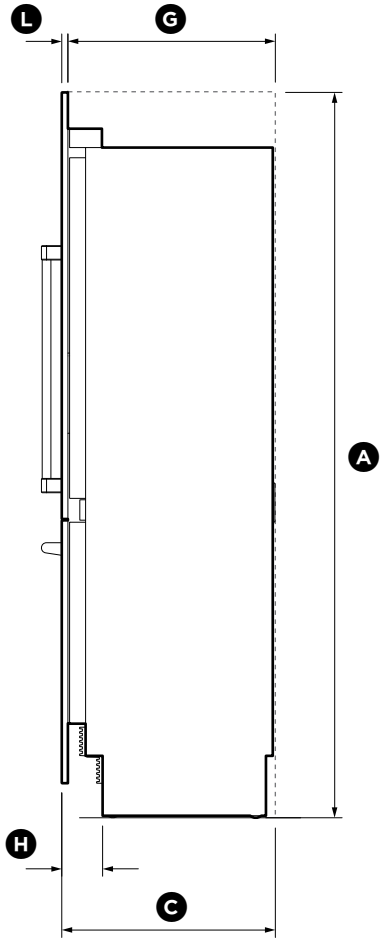

PROFILE VIEW

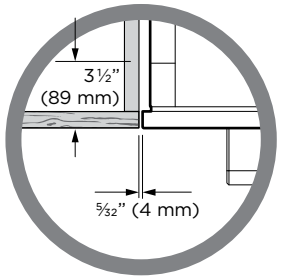

Frameless: Finished return top and sides

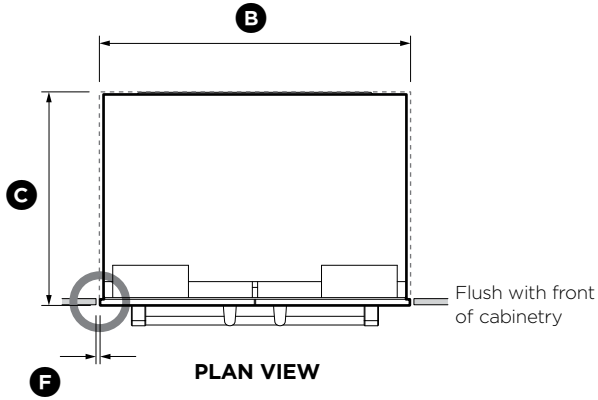

PLAN VIEW

CAVITY DIMENSIONS		inches (mm)
Ⓐ	Overall height of cavity	84" (2134)
Ⓑ	Overall width of cavity	36" (914)
Ⓒ	Overall depth of cavity	24 ¾" (629)

Total front panel width with required gaps at sides = 36" (914 mm) (Ⓔ product width + 2 x Ⓕ cabinetry gaps).
Height of front panels with required gap above = 84" (2134 mm) (Ⓓ product height + Ⓕ cabinetry gap).

PRODUCT DIMENSIONS		inches (mm)
Ⓓ	Overall height of product*	83 27⁄32" (2130)
Ⓔ	Overall width of product	35 21⁄32" (906)
Ⓕ	Minimum cabinetry gap clearance from edge of product	5⁄32" (4)
Ⓖ	Overall depth of product (excluding front door panels)	23 ¾" (603)
Ⓗ	Depth of toe kick (measured from front of door panels)**	4 ¾" (120)
Ⓘ	Height of toe kick*	4" (102)
Ⓙ	Height of bottom drawer panel	30 13⁄32" (772)
Ⓚ	Height of top door panels	49 9⁄32" (1252)
Ⓛ	Depth of product front panels (excludes handles)***	¾" (19)

* Includes mounted feet.

** Does not include custom toe kick to be manufactured and fitted by cabinetmaker.

***Optional Stainless steel front panels – Model no. RD3684C (non-Water dispensing model) and model no. RD3684UC (Ice & Water model).

RS36A80JC DCS model shown with RD3684C door panels.

⑤ PRODUCT AND CAVITY DIMENSIONS – WITH RD3680C/RD3684C DOOR PANEL SET

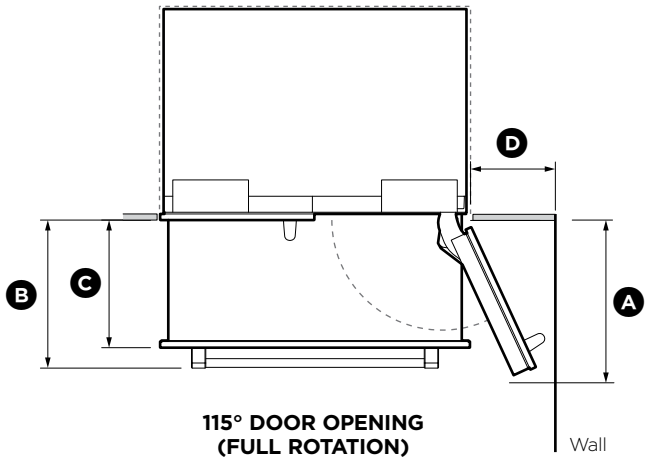

115° DOOR OPENING (FULL ROTATION)

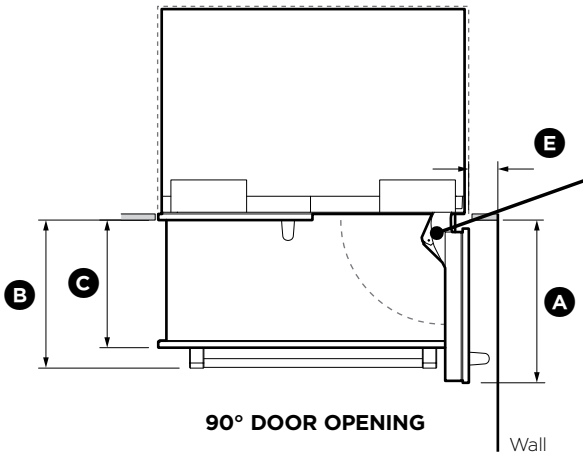

90° DOOR OPENING

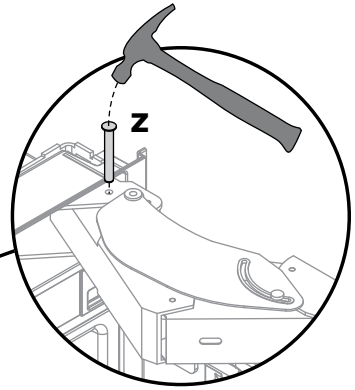

For 90° door swing a hinge limiting pin is supplied with your appliance. This pin fits in the boreholes of the top hinge (refer to **Z**).

WARNING!

Before opening doors to the product, ensure the product is on its base packer and the polystyrene stability blocks are still in place. Failure to follow these instructions could lead to serious injury or death.

1 Open door to 90°.

2 Using a hammer, drive the hinge limiting pin through the boreholes which are now vertically aligned.

DOOR CLEARANCE DIMENSIONS	inches (mm)
Ⓐ Depth of door (widest opening) measured from front of door	18 29/32" (480)
Ⓑ Depth of drawer (open) measured from front of drawer, including handle	16 17/32" (420)
Ⓒ Depth of drawer (open) measured from front of drawer, excluding handle	14 3/16" (360)
Ⓓ Minimum door clearance* to adjacent wall (115° – full internal access)	13 3/16" (335)
Ⓔ Minimum door clearance* to adjacent wall (90° – reduced internal access)	5 1/8" (130)

* Measured from front cabinetry edge.

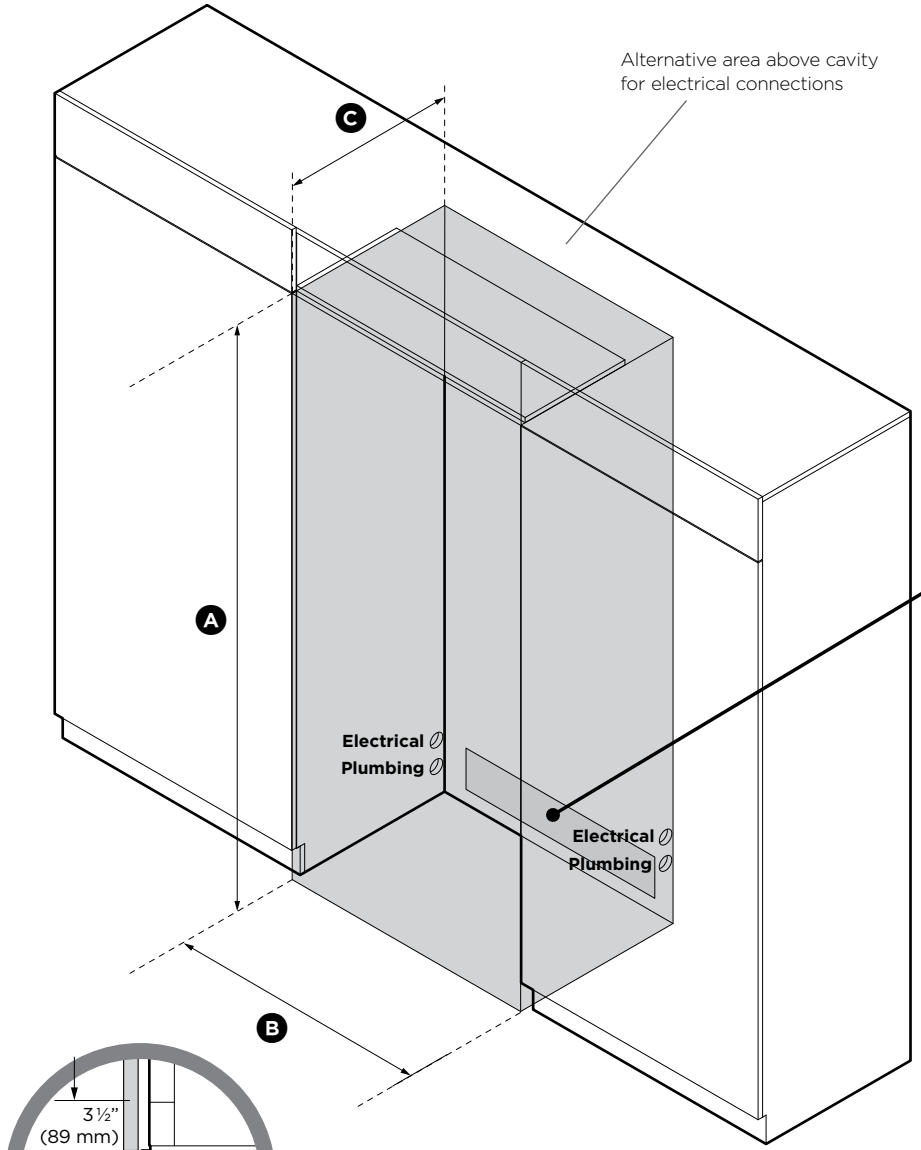

Frameless: Finished return top and sides

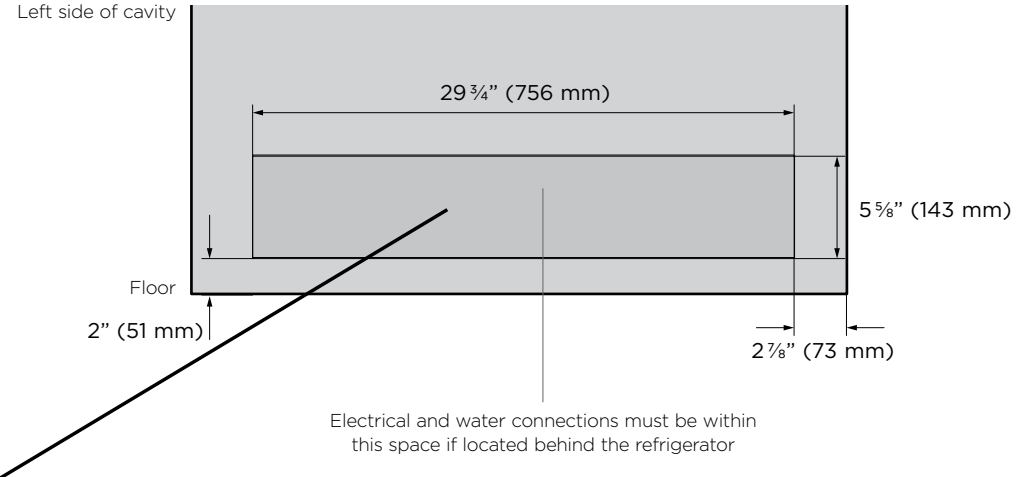

REAR OF CAVITY

IMPORTANT!

For ease of installation, ensure cavity width is consistent top to bottom and height is consistent left to right.

MINIMUM CAVITY DIMENSIONS	inches (mm)
Ⓐ Overall height of cavity	80/84" (2032/2134)
Ⓑ Overall width of cavity	36" (914)
Ⓒ Overall depth of cavity	24¾" (629)

ELECTRICAL SPECIFICATIONS	
Supply	115 VAC, 60 Hz
Service	10 amp circuit
PLUMBING SPECIFICATIONS	
Supply	¼" comp. Stainless steel braided hose
Pressure	Minimum 22 psi (150 kPa) Maximum 120 psi (827 kPa) @ 68°F (20°C)

Note: electrical connection can be located in an adjacent cabinet to either side of the fridge or above the fridge cavity.

7 CUSTOM DOOR PANEL DIMENSIONS

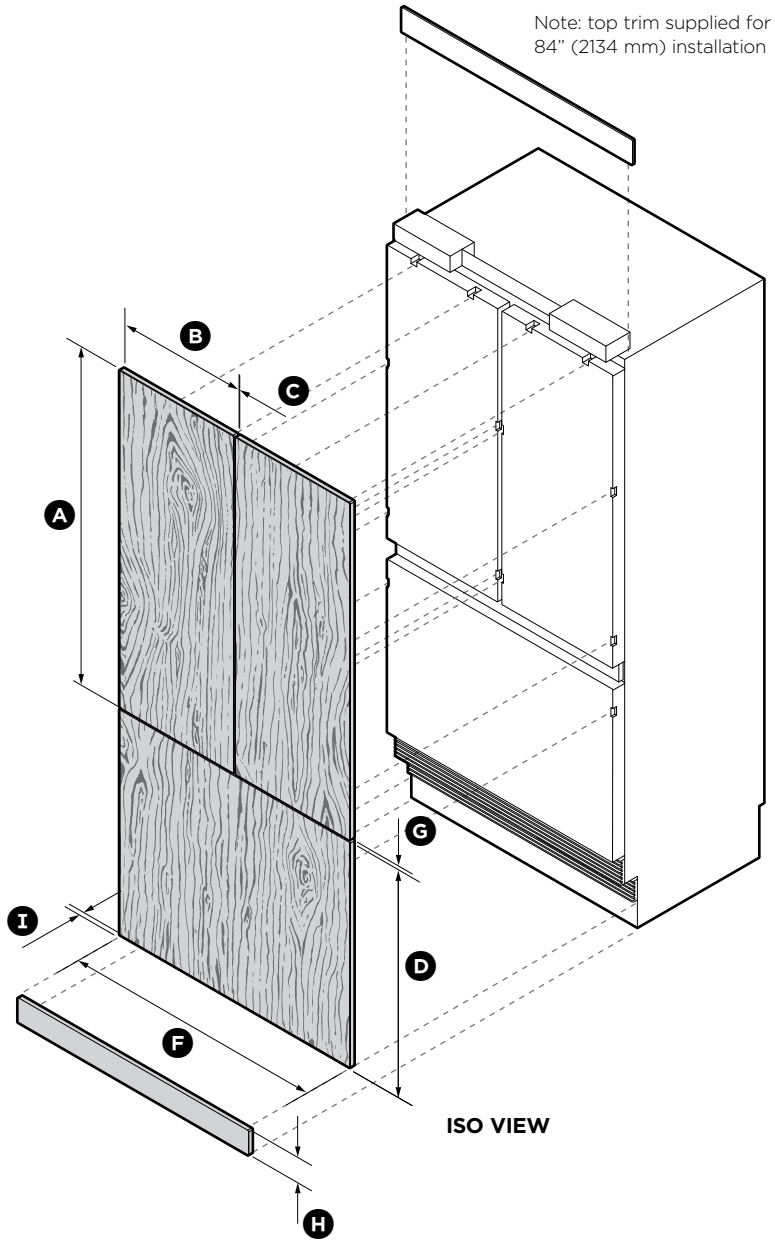

ISO VIEW

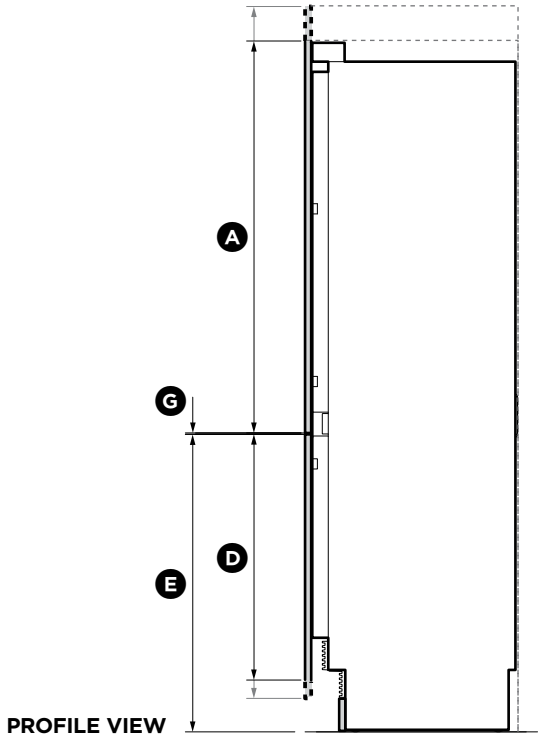

PROFILE VIEW

PANEL DIMENSIONS		RS36A80JC DCS inches (mm)
Ⓐ	Height of top door panel	min. 45 9/32 – max. 49 9/32" (min. 1150 – max. 1252)
Ⓑ	Width of top door panel	17 3/4" (451)
Ⓒ	Gap between top door panels	5/32" (4)
Ⓓ	Height of bottom drawer panel*	28 13/32 – 30 13/32" (722 – 772)
Ⓔ	Height from bottom of product to top of bottom drawer panel	34 13/32" (874)
Ⓕ	Width of bottom drawer panel	35 21/32" (906)
Ⓖ	Gap between top door panels and bottom drawer panel	5/32" (4)
Ⓗ	Height of toe kick panel*	4 – 6" (101 – 152)
Ⓘ	Maximum depth of custom panels	3/4" (19)
	Maximum weight of an individual top door panel**	22 pounds (10 kg)
	Maximum weight of bottom drawer panel**	24 1/4 pounds (11 kg)

Custom door panels to be manufactured and fitted by cabinetmaker.

Toe kick can be manufactured by cabinetmaker or stainless toe kick can be used.

Door handles available as a separate accessory.

* The bottom grille can be reduced to allow for a higher toe kick. Adjust the height of the bottom drawer panel accordingly.

** Includes weight of handle.

RS36A80JC DCS model shown only.
When designing custom door panels, these are only available for non-Water dispensing models.

7 CUSTOM DOOR PANEL DIMENSIONS

The drawings below apply to non-Water dispensing models only (RS36A80JC DCS). Dimensions are shown in Imperial (inches) and apply for the preparation and installation of custom door panels. For Dwg and Dxf files of the below panel preparation download the folder on http://www.dcsappliances.com/designers-architects/

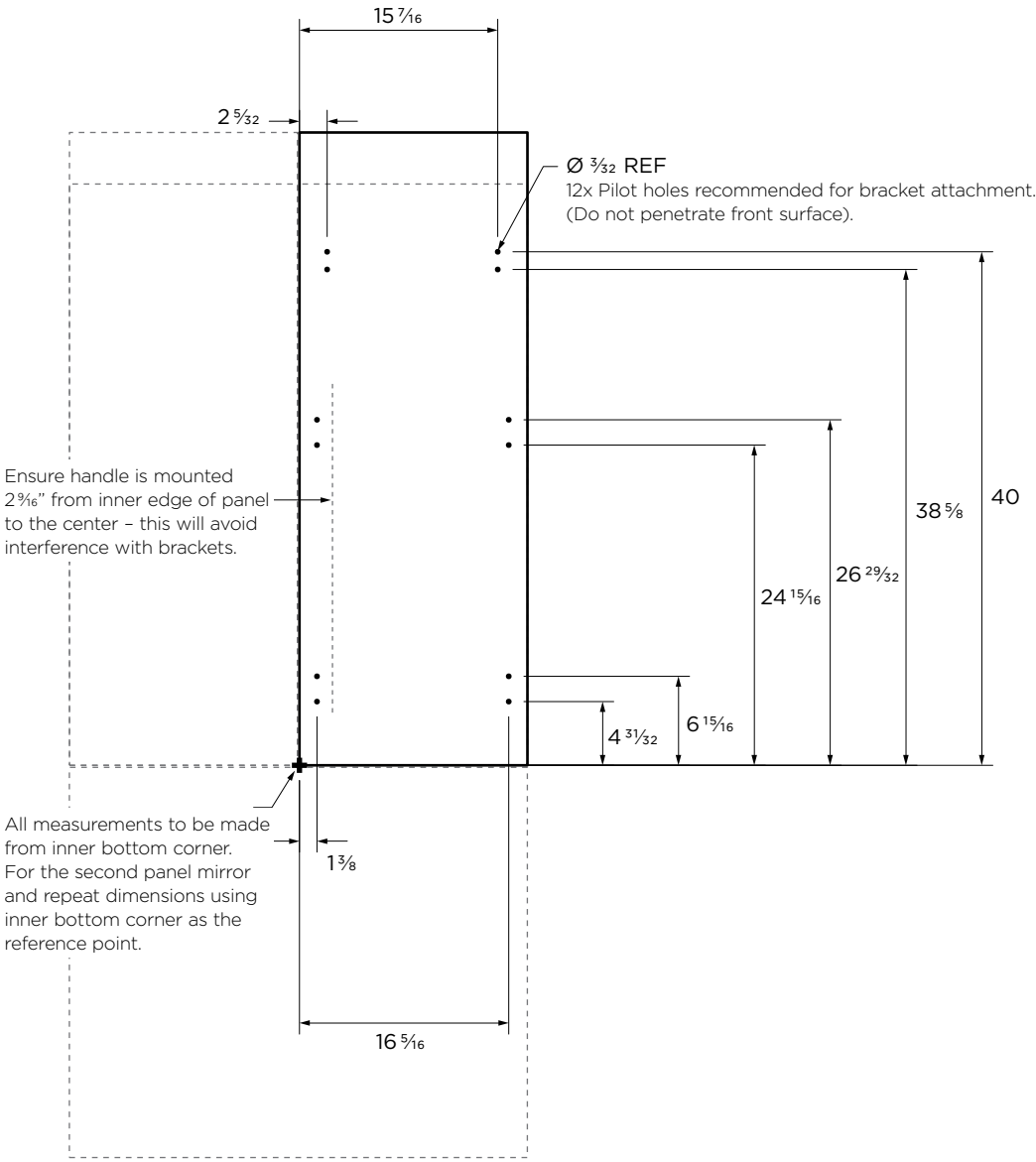

TOP PANEL – REAR VIEW

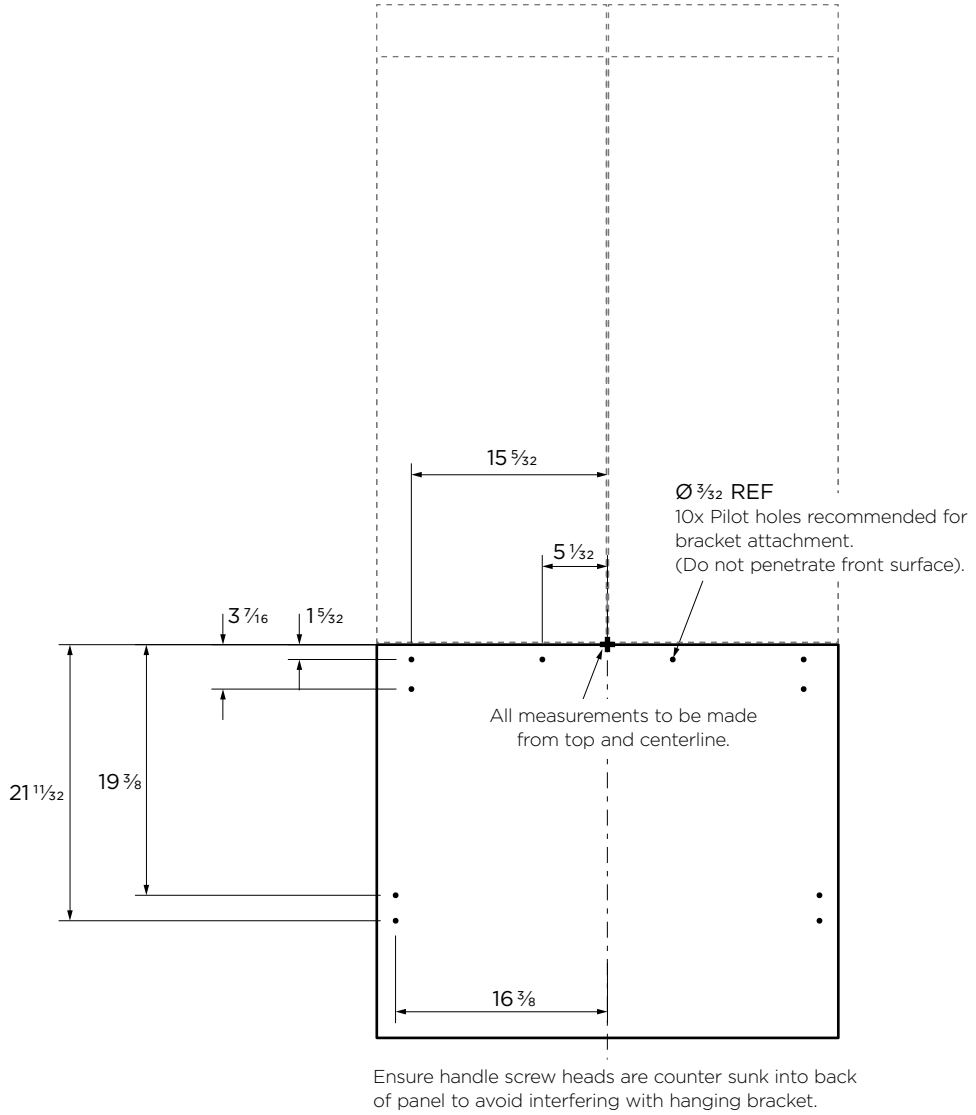

BOTTOM PANEL – REAR VIEW

⑧ 80” (2032 mm) CAVITY – ATTACH ANTI-TIP BRACKET

IMPORTANT!

Safety requires refrigerators be stable when doors and/or drawer, are open. The anti-tip bracket and fittings supplied must be fitted to the wall of the finished enclosure to withstand a 220.5 pound (100 kg) load. This will prevent the possibility of the appliance tipping forward, when doors and/or drawer, are open.

WARNING!

Failure to follow instructions can lead to serious injury or death.

When fastening with masonry plugs and/or screws:

- **Ensure the screws avoid electrical, gas and water conduits.**
- **Ensure the surface the bracket is fastened to withstands a 220.5 pound (100 kg) load.**
- **Ensure light-weight masonry material such as cinder block and new concrete (no curing time) are not used in installation.**
- **Do not use metallic materials that may corrode, stain and/or damage the enclosure.**

For 80” (2032 mm) cavity installation

Wooden/plaster board wall installation

1 Project the end of the above finished enclosure to the center of the back wall and subtract 2 7⁄16” (62 mm). This will locate the contact surface between the bracket and the appliance (refer to **A**).

Ensure a structural beam/wall stud closest to the center of the wall enclosure is located.

2 Fix bracket to the wall with screws x4 (#10 x 40 pan head Phillips screws). Ensure screws hold tight and the bracket overlaps the appliance when it is positioned (2 3⁄8” min. (60 mm)) for a secure hold.

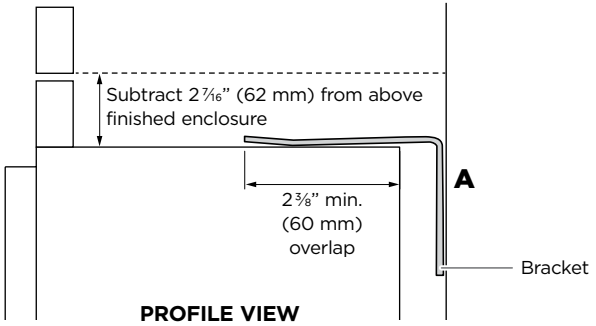

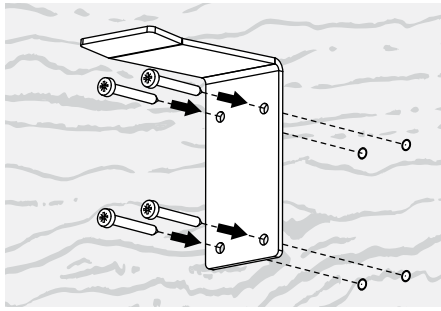

Solid wall installation

1 Project the end of the above finished enclosure to the center of the back wall and subtract 2 7⁄16” (62 mm). This will locate the contact surface between the bracket and the appliance (refer to **B**).

2 Mark screw locations to drill Ø ¼” x 1 3⁄8” (Ø 6.0 mm x 35 mm) deep holes. Hammer masonry plugs into the wall until flush x4. Fix bracket to the wall with screws x4 (#10 x 40 pan head Phillips screws). Ensure screws hold tight.

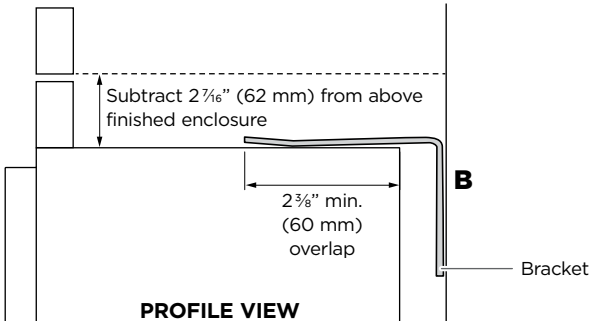

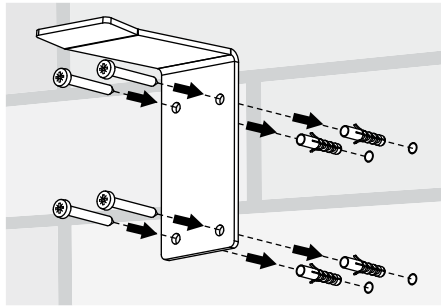

Spacer installation

If a minimum 2 3⁄8” (60 mm) overlap cannot be achieved we recommend fastening a solid spacer (wooden beam etc) behind the bracket.

1 Ensure the length of the spacer corresponds to the enclosure’s width. Always secure the spacer to existing studs on the enclosure wall (refer to **C**).

2 Fix bracket to the spacer with screws x4 (#10 x 40 pan head Phillips screws). Ensure screws hold tight and the bracket overlaps the appliance when it is positioned (2 3⁄8” min. (60 mm)) for a secure hold.

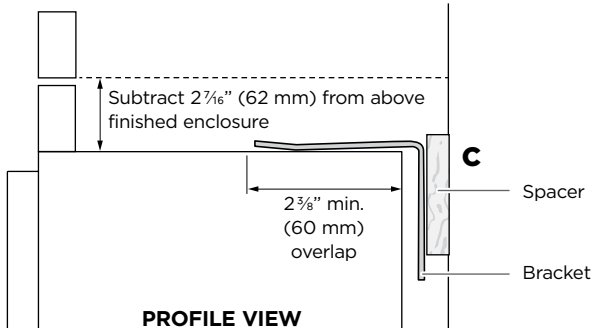

⑧ 84” (2134 mm) CAVITY – ATTACH ANTI-TIP BRACKET

IMPORTANT!

Safety requires refrigerators be stable when doors and/or drawer, are open. The anti-tip bracket and fittings supplied must be fitted to the wall of the finished enclosure to withstand a 220.5 pound (100 kg) load. This will prevent the possibility of the appliance tipping forward, when doors and/or drawer, are open.

WARNING!

Failure to follow instructions can lead to serious injury or death.

When fastening with masonry plugs and/or screws:

- **Ensure the screws avoid electrical, gas and water conduits.**
- **Ensure the surface the bracket is fastened to withstands a 220.5 pound (100 kg) load.**
- **Ensure light-weight masonry material such as cinder block and new concrete (no curing time) are not used in installation.**
- **Do not use metallic materials that may corrode, stain and/or damage the enclosure.**

For 84” (2134 mm) cavity installation

Wooden/plaster board wall installation

1 Project the end of the above finished enclosure to the center of the back wall and subtract 6 15⁄32” (164 mm). This will locate the contact surface between the bracket and the appliance (refer to **A**).

Ensure a structural beam/wall stud closest to the center of the wall enclosure is located.

2 Fix bracket to the wall with screws x4 (#10 x 40 pan head Phillips screws). Ensure screws hold tight and the bracket overlaps the appliance when it is positioned (2 3⁄8” min. (60 mm)) for a secure hold.

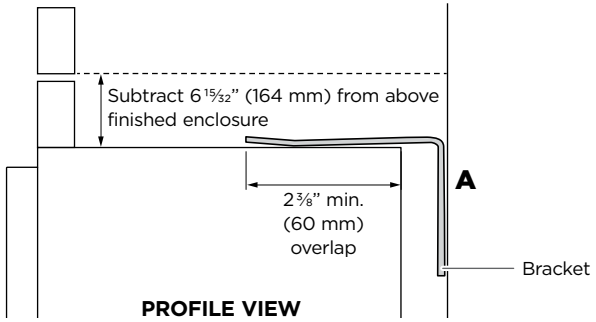

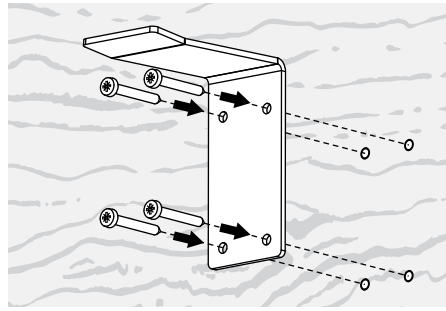

Solid wall installation

1 Project the end of the above finished enclosure to the center of the back wall and subtract 6 15⁄32” (164 mm). This will locate the contact surface between the bracket and the appliance (refer to **B**).

2 Mark screw locations to drill Ø 1⁄4” x 1 3⁄8” (Ø 6.0 mm x 35 mm) deep holes. Hammer masonry plugs into the wall until flush x4. Fix bracket to the wall with screws x4 (#10 x 40 pan head Phillips screws). Ensure screws hold tight.

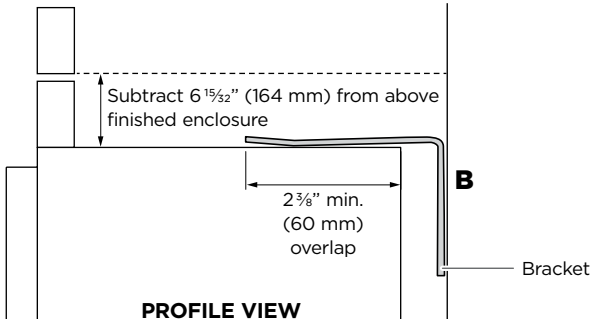

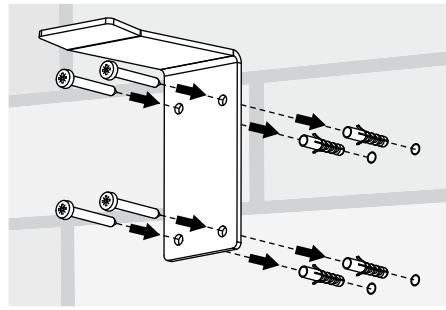

Spacer installation

If a minimum 2 3⁄8” (60 mm) overlap cannot be achieved we recommend fastening a solid spacer (wooden beam etc) behind the bracket.

1 Ensure the length of the spacer corresponds to the enclosure’s width. Always secure the spacer to existing studs on the enclosure wall (refer to **C**).

2 Fix bracket to the spacer with screws x4 (#10 x 40 pan head Phillips screws). Ensure screws hold tight and the bracket overlaps the appliance when it is positioned (2 3⁄8” min. (60 mm)) for a secure hold.

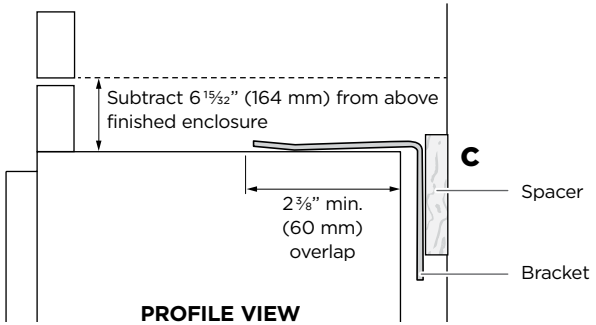

IMPORTANT!

Take care when working with the appliance outside of the finished enclosure, as the appliance is not secured and has the possibility of tipping forward.

1 Ensure all external packaging material is removed from the appliance before installation.

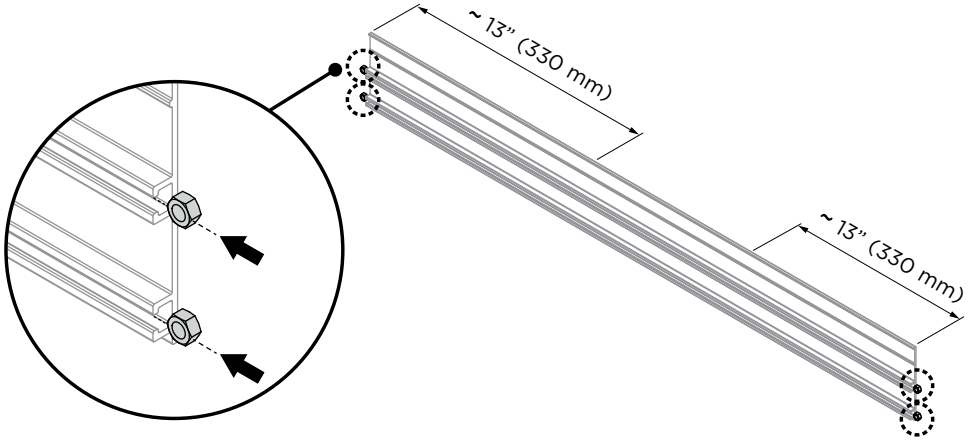

2 On the right side of the top trim, insert M5 nuts x2 onto the top and bottom slide. Slide nuts towards the center of the trim, ~ 13” (330 mm).

Repeat this process on the opposite side.

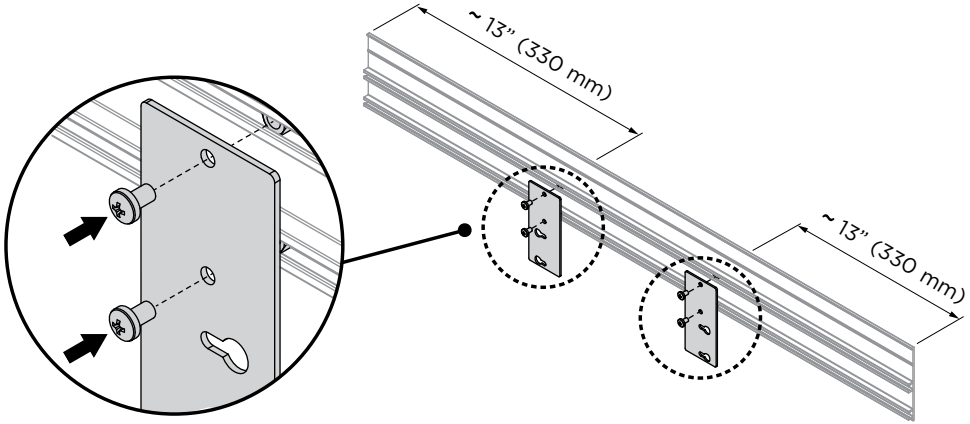

3 Position joining brackets over the M5 nuts. Thread screws x2 (M5 x 8 pan head Phillips screws) through bracket hole and secure.

Repeat this process on the opposite side.

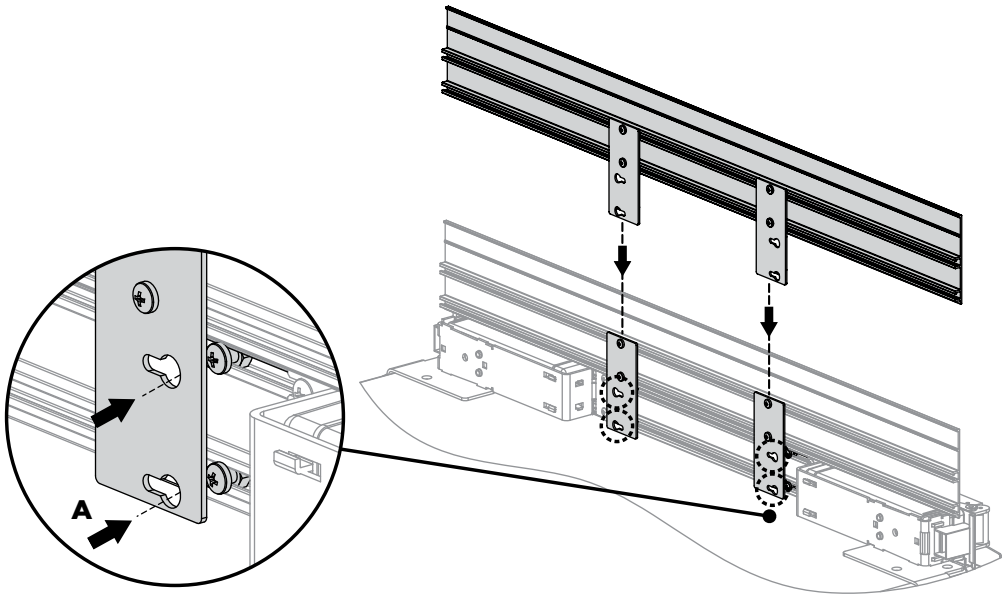

4 At the top of the appliance, place the assembled top trim behind the existing appliance trim. Bring the top trim forward and insert screw heads through the key holes of the joining brackets (refer to **A**).

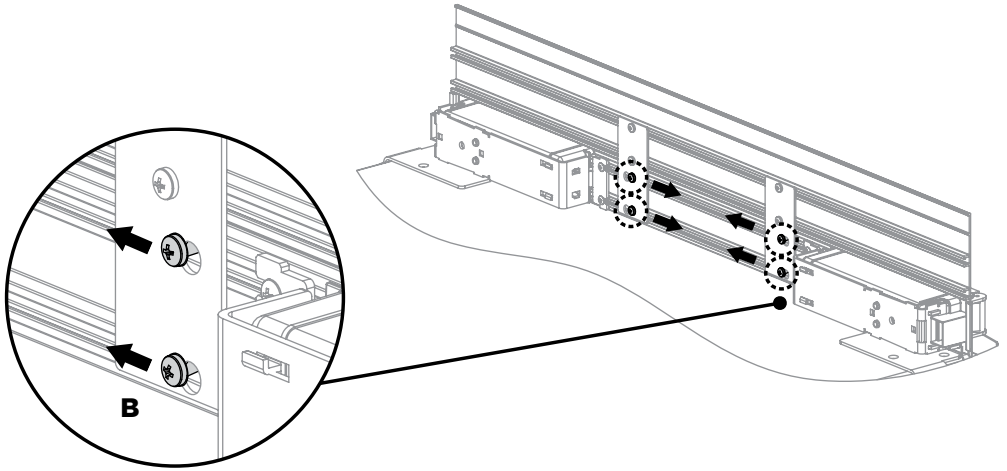

5 Slide the screws located on the appliance sideways towards the narrow side of the key holes on the joining bracket, and tighten screws to lock top trim in position (refer to **B**).

⑨ ATTACH SIDE BASE BRACKETS AND INSTALLATION AIDERS

IMPORTANT!

- **Take care when working with the appliance outside of the finished enclosure, as the appliance is not secured and has the possibility of tipping forward.**
- **Installation aiders can only be used when door panels and surrounding cabinetry panels are the same thickness.**

1 Ensure all external packaging material is removed from the appliance before installation.

2 At the base LH side of the appliance attach the LH side bracket to the dedicated threaded holes and secure with screws x2 (M5 x 8 countersunk Phillips screws). Repeat this process on the RH side of the appliance.

Repeat this process on the RH side of the appliance.

LH orientation

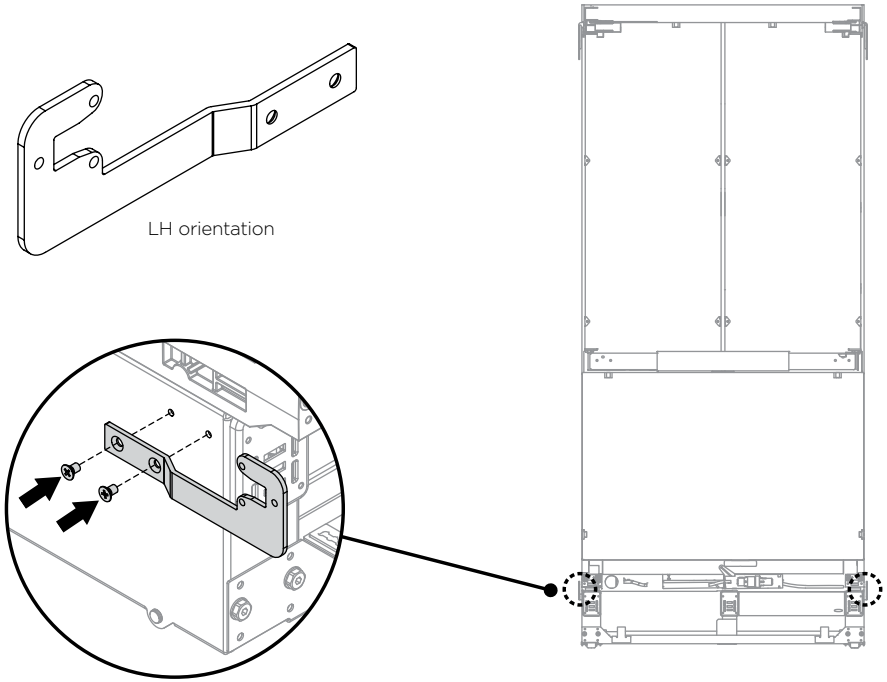

3 The installation aiders supplied are used to determine how far the appliance needs to be positioned into the finished enclosure, to be flush with surrounding cabinetry.

Each aider has a set of dimension tabs designed for the different door panel thickness (refer to **A**). Select the tabs which are most suitable to your door panel thickness and break off all other unwanted tabs.

Repeat this process for the remaining aiders.

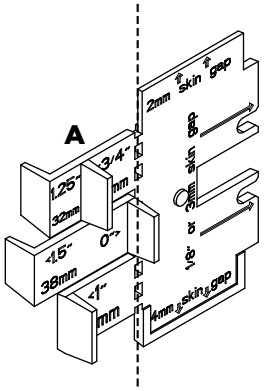

Break off unwanted tabs

4 Carefully open one refrigerator door, ensuring the appliance does not tip forward. Place the aider onto the side of the appliance, use the locating boss to determine the aider's position and secure with screws x2 (M5 x 8 countersunk Phillips screws).

Repeat this process for the remaining aiders.

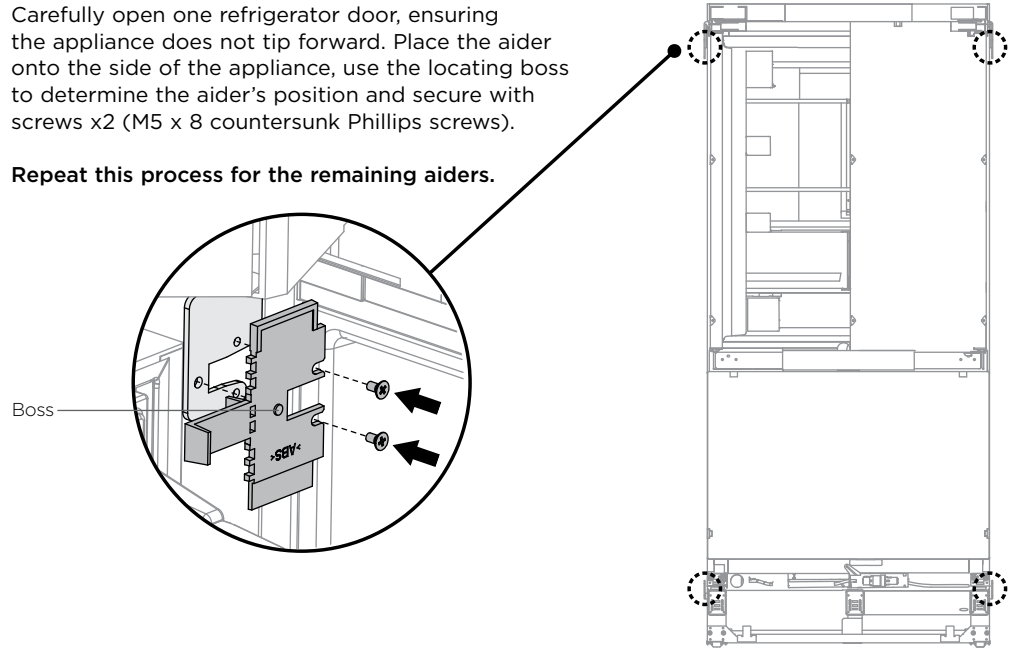

⑩ CONNECT TO WATER AND ELECTRICAL SUPPLY

IMPORTANT!

- **The water connection instructions below are intended only for the professional installer.**
- **DO NOT use with water that is microbiologically unsafe or of unknown quality.**
- **WARNING – connect to potable drinkable water supply only.**
- **DO NOT install on line pressure above 120 psi (827 kPa) or below 22 psi (150 kPa).**
- **DO NOT use on hot water supply (100°F [38°C max.]).**
- **AVOID contamination of pipes during installation.**
- **Old water fittings (hose-sets) should not be reused.**
- **The standard appliance does not include a water line such as copper or plastic tubing. ¼" copper tubing or ¼" plastic tubing can be used. These parts need to be purchased separately and must comply with local regulations.**
- **The shut off valve should be accessible.**

1 Ensure the refrigerator is NOT plugged into a power supply. Locate isolating faucet for water connection – cold water supply only. Tee and faucet fittings are not supplied.

Position the appliance 1.5 – 2 ft. (450 – 600 mm) in front of the finished enclosure. This will allow access behind the appliance for power and water connections.

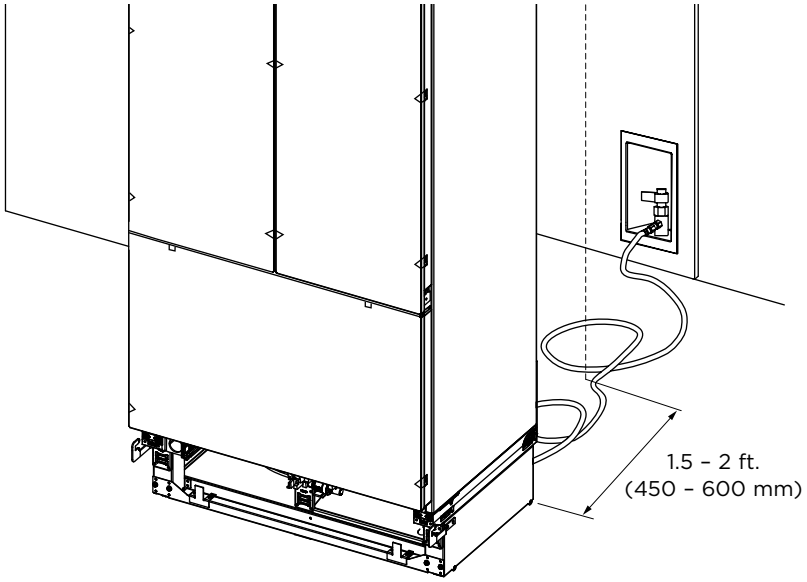

2 At the front of the appliance, fasten the adaptor onto one end of the braided water hose.

Note: The adaptor is not required for installation, if ¼" PEX plastic tubing is used.

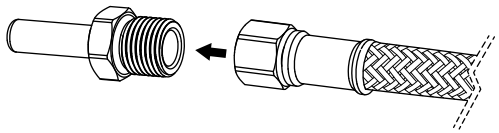

3 Firmly insert the tube end of the adaptor into the PLV, until the end is no longer visible. Once inserted, pull gently on tubing to ensure it is locked in (refer to **A**).

Note: dislodge the PLV if required.

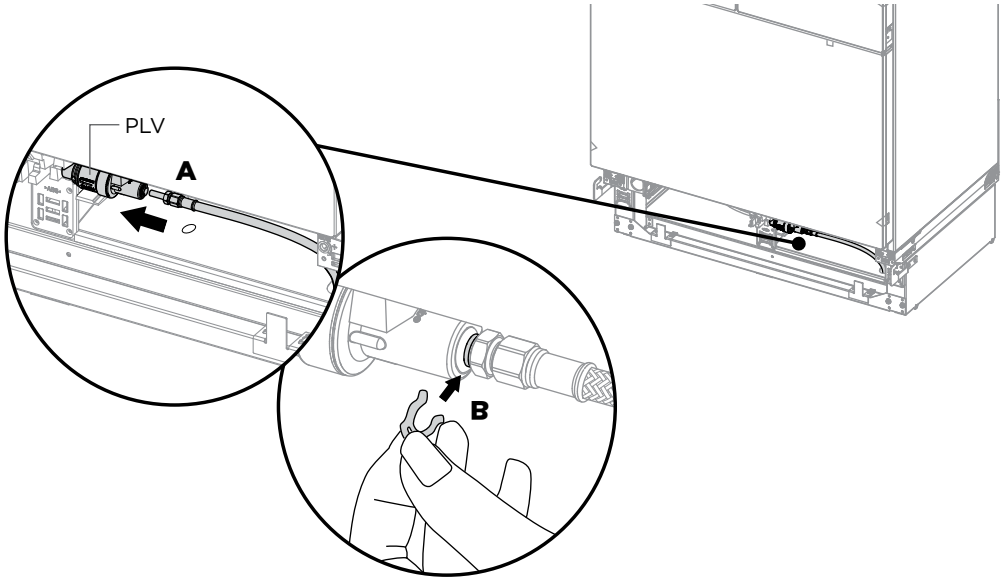

4 Secure connection by attaching the locking key in between the PLV and tube end of the adaptor (refer to **B**).

Note: if PLV was dislodged for installation (**3**), mount PLV back into clip.

5 Thread the free end of the water hose into the dedicated hole located in the base of the appliance, through to the back of the appliance (refer to **C**).

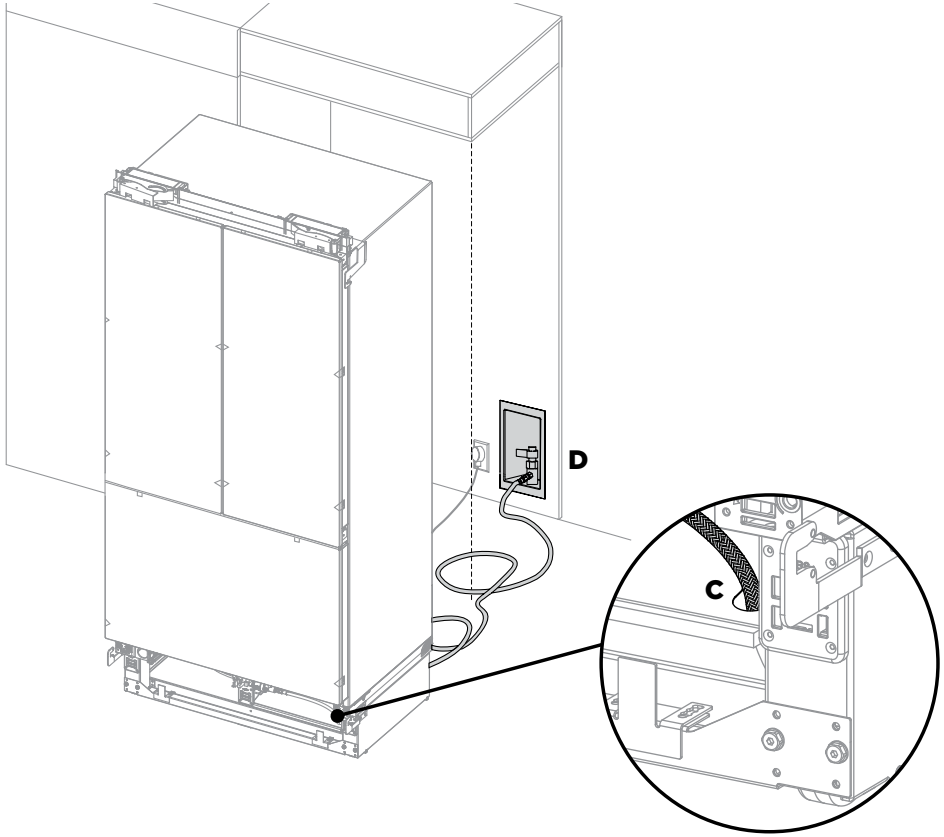

6 At the back of the appliance, loosely coil the water hose (~2 – 3 times) and fasten the end of the hose to the cold water supply (refer to **D**).

Take care not to over-tighten the connection. Turn the isolating faucet on and check that all connections are dry and free of drips.

7 At the back of your appliance, connect the appliance to the electrical supply (115 VAC, 60 Hz) with the fitted plug and lead, and turn on. Ensure the appliance is connected to its own isolating switch (refer to **E**).

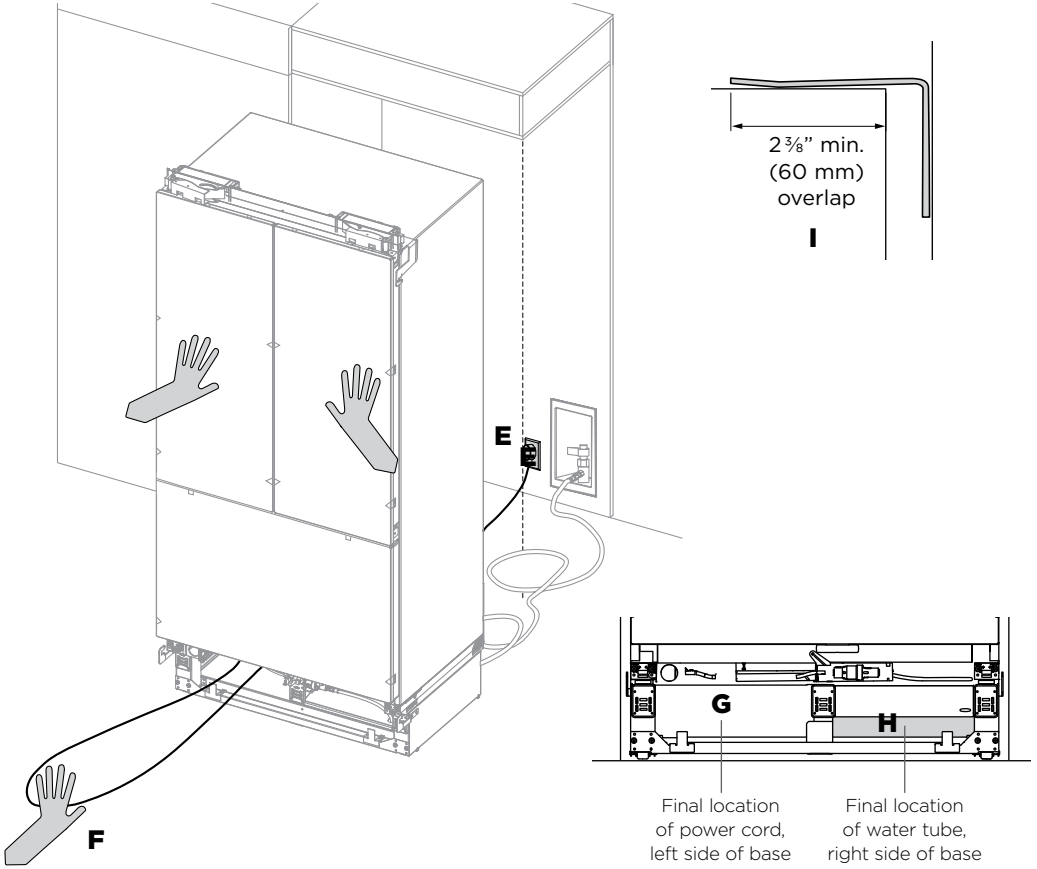

8 **In order to push appliance into correct position:**

- Stop midway, reach through base to locate power cord. Pull power cord through the front left side of the appliance (refer to **F**), tucking it neatly in the left side of the base (refer to **G**).
- Reach through base to locate water hose coil. Tuck coil neatly into front right side of base (refer to **H**).

IMPORTANT!

Failure to do this can result in running over the hose causing damage and possible water leaks.

- Push product until doors are in line with the frame. Ensure the appliance is centred.
- Firm contact must be achieved between the appliance and the anti-tip bracket, 2⅜" min. (60 mm) overlap (refer to **I**).

WARNING!

Failure to follow this instruction can lead to serious injury or death.

IMPORTANT!

- **It is important that all four corners of the appliance is supported firmly onto the floor to eliminate any movement.**
- **Installing the appliance on a soft, uneven, or not level floor may result in twisting of the product and poor door sealing.**
- **Raise the appliance using an 7⁄16” (11 mm) hex socket or 3⁄16” (4 mm) hex Allen key. One turn of height adjusting nuts is equivalent to 1⁄16” (1 mm) height travel. Note: maximum travel is 13⁄16” (20 mm).**

1 Using the front and rear adjustment nuts (**A**), level the appliance back to front until all tabs located on the installation aiders are in contact with adjacent cabinetry.

IMPORTANT!

Ensure the appliance makes light contact with all tabs on installation aiders. Difficulties in achieving final alignment can be caused by:

- **Failure to make contact with the installation aiders**
- **Too much pressure on the installation aiders causing tabs to bend**

2 Gently push the front of the appliance to check the stability, and ensure side gaps are even with enclosure.

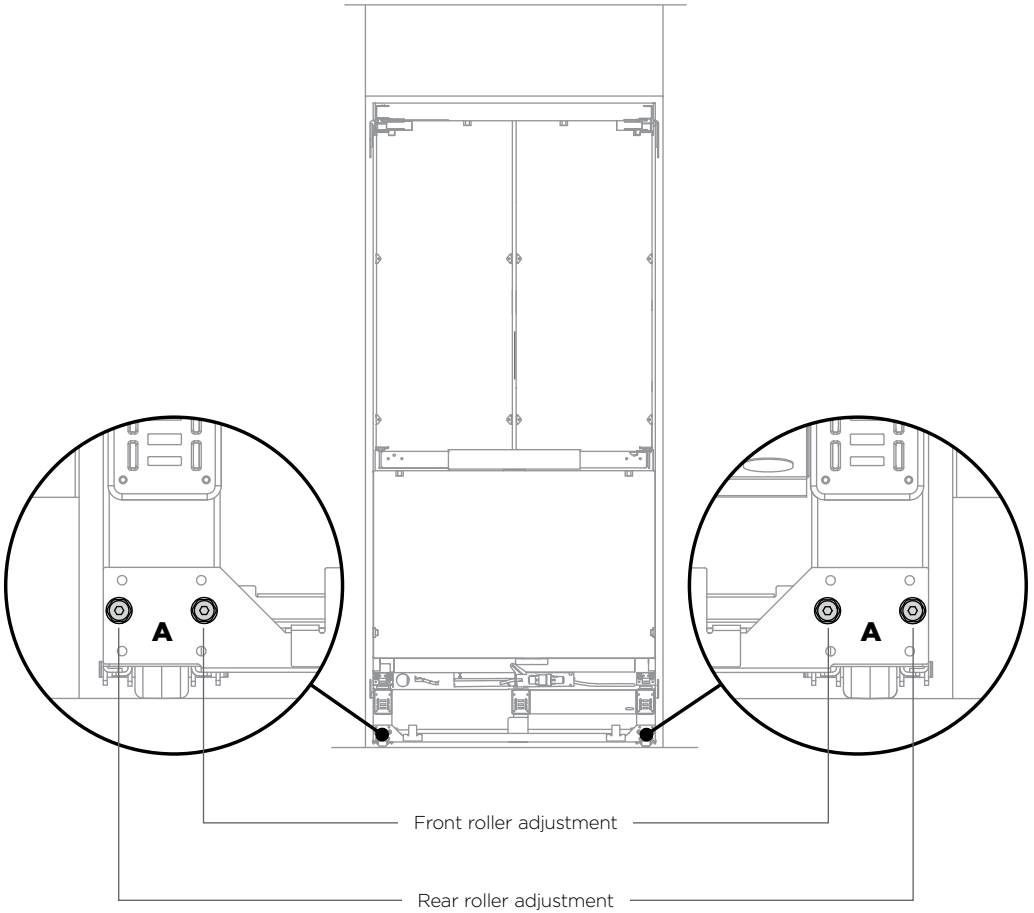

⑫ TEMPORARILY FIXING YOUR PRODUCT AND ATTACHING DOOR STUDS

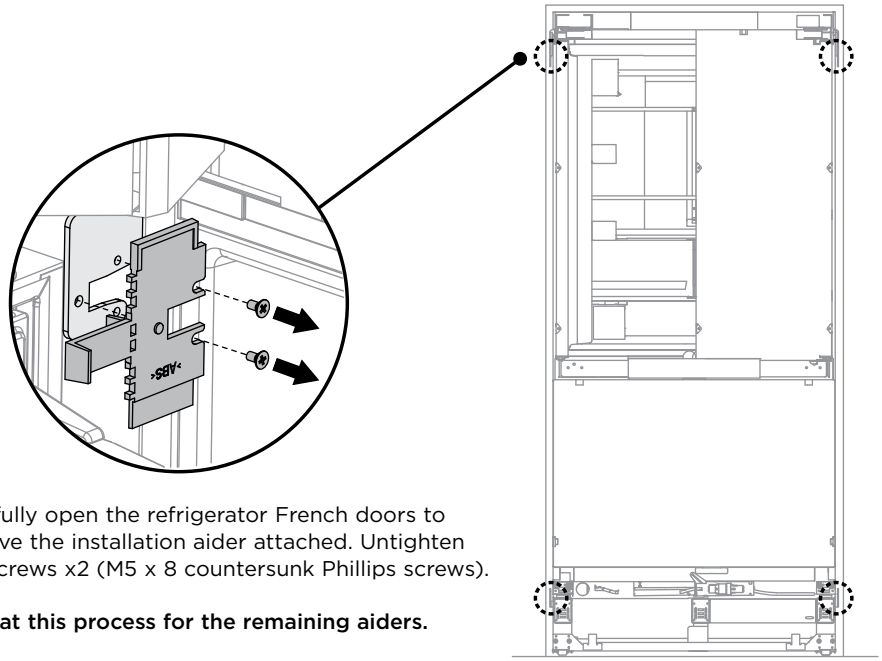

1 Carefully open the refrigerator French doors to remove the installation aider attached. Untighten the screws x2 (M5 x 8 countersunk Phillips screws).

Repeat this process for the remaining aiders.

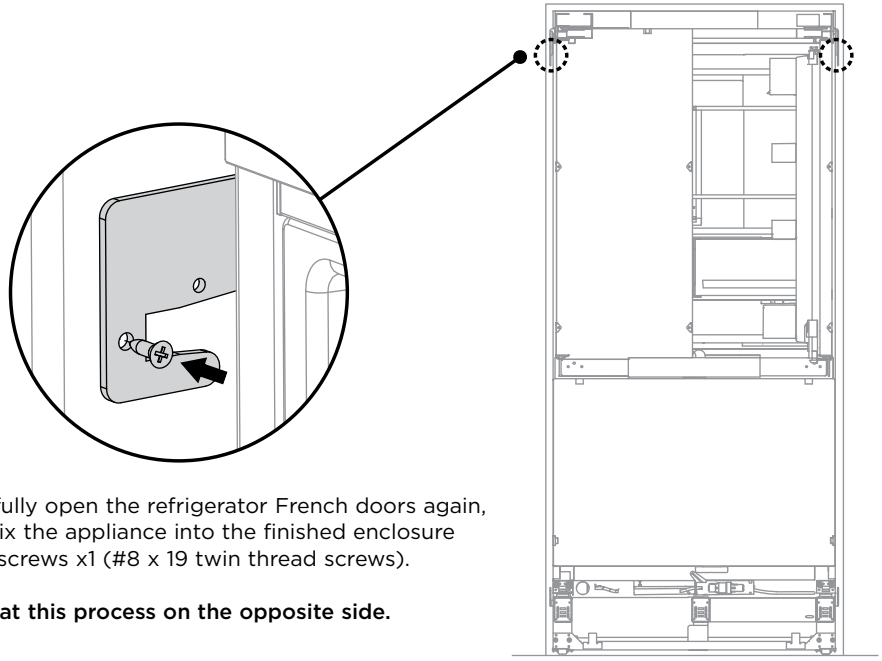

2 Carefully open the refrigerator French doors again, and fix the appliance into the finished enclosure with screws x1 (#8 x 19 twin thread screws).

Repeat this process on the opposite side.

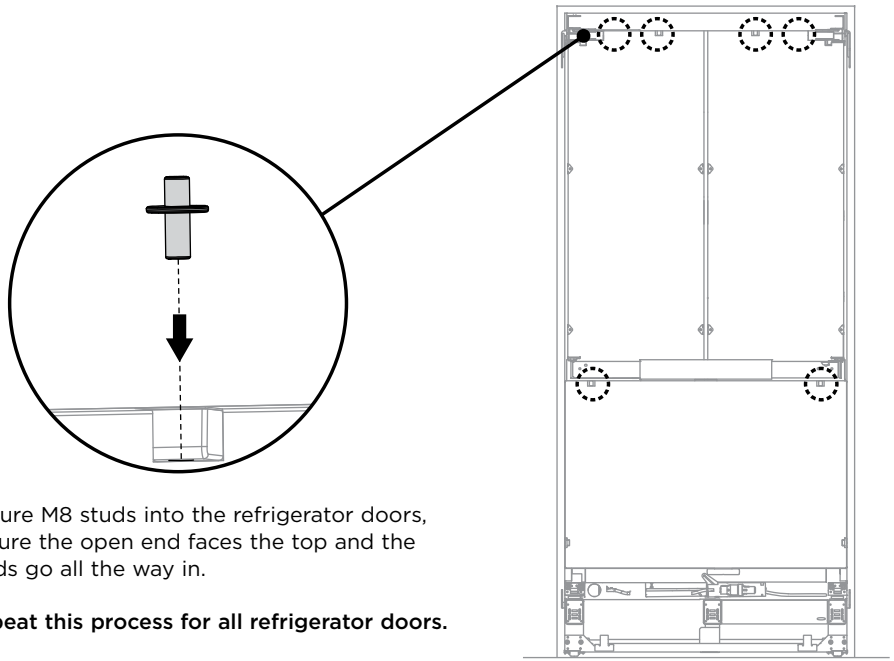

3 Secure M8 studs into the refrigerator doors, ensure the open end faces the top and the studs go all the way in.

Repeat this process for all refrigerator doors.

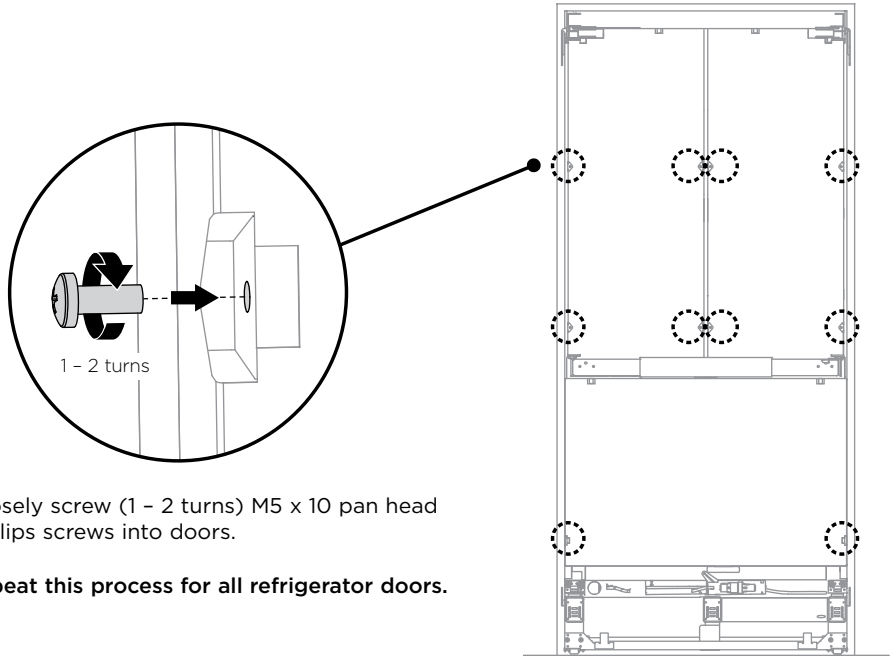

4 Loosely screw (1 – 2 turns) M5 x 10 pan head Phillips screws into doors.

Repeat this process for all refrigerator doors.

(13) INSTALL WATER FILTER CARTRIDGE AND KICKSTRIPS

IMPORTANT!

- **The water filter head must be firmly pushed into the product and secured, incorrect installation can lead to water leaks.**
- **It is not necessary to shut off the water supply when installing the water filter.**

1 Remove the red protective cap on the spigot head and align the filter cartridge tool over the filter handle

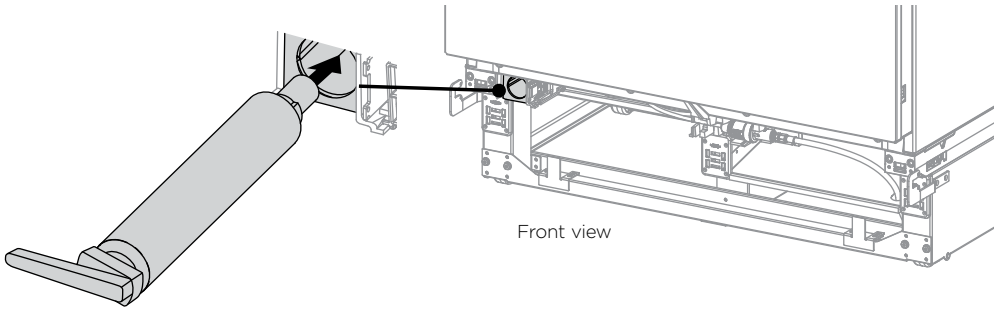

Front view

2 Pull the freezer drawer out slightly and insert the filter cartridge and tool into the bottom left of the product. Firmly push the cartridge in until the filter head cannot be pushed any further.

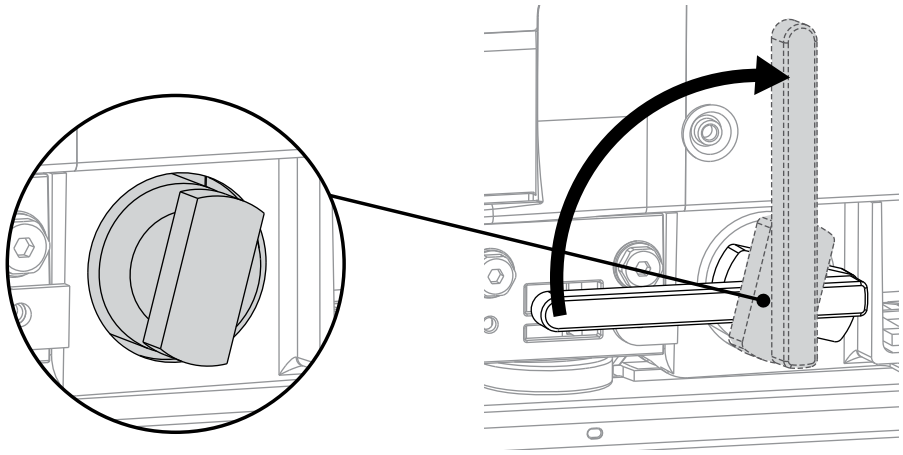

Filter cartridge in the locked position.

3 Turn 90° clockwise to tighten. Remove filter cartridge tool and close freezer drawer.

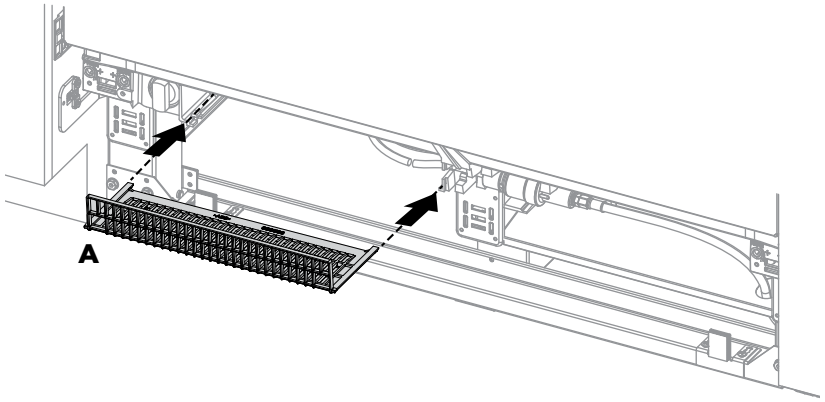

4 **Installing kickstrip filter**
Remove filter from inside the product. Fit the filter onto the rails and push to the rear until it clips securely (refer to **A**).

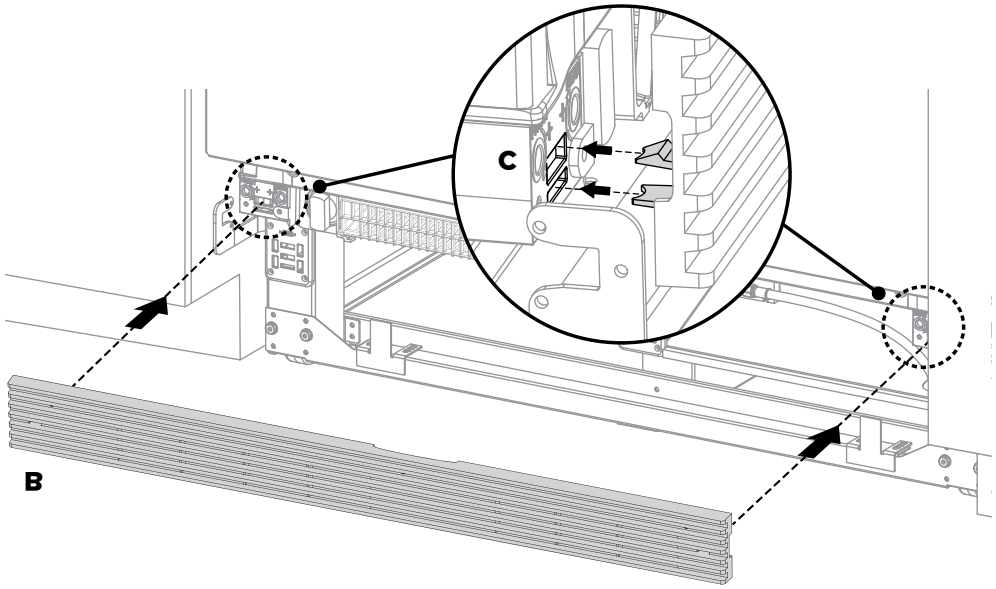

5 **Top kickstrip grille**
Ensure the top grille is inserted in the correct orientation (refer to **B**). Align the top grille clips to the top plinth slots then firmly push grille onto appliance until the clips engage (refer to **C**).

(14) ASSEMBLE DOOR PANEL SET

The assembly of DCS by Fisher & Paykel kits (Stainless steel door panels) and custom door panels are outlined below. For DCS by Fisher & Paykel kits, only remove the protective film for handle installation. This will protect the finish of the door panels until installation is complete.

French door panels

1 **Mounting handle** (refer to **A**)
For DCS by Fisher & Paykel door panel sets, remove the plastic plugs from the handle holes x4. Align the handle to the holes and secure with screw handle x4 (M5 x 25 pan head socket screws).

For custom panels, ensure handle is secured 2 3⁄16" (65 mm) from the inner edge of the panel to the center – this will avoid interference with bracket installation.

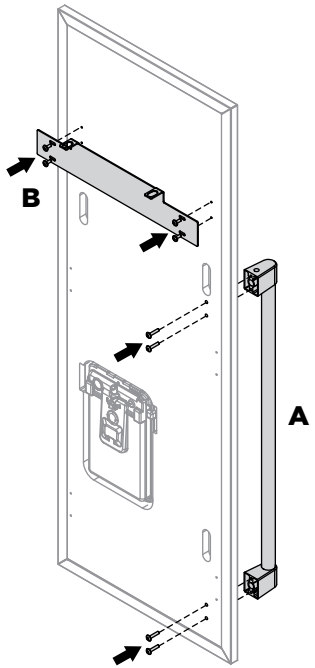

2 **Hanging bracket** (refer to **B**)
For DCS by Fisher & Paykel door panel sets, align the bracket to the holes and secure with screws x4 (M5 x 14 Mush Phillips SS).

For custom panels, secure bracket with screws x4 (#8 x 16 Mush washer screws).

3 **Side brackets and straps** (refer to **C**)
For DCS by Fisher & Paykel door panel sets, align bracket and strap to the holes on the side of the panel and secure with screws x2 (M5 x 14 Mush Phillips SS).

For custom panels, secure bracket with screws x2 (#8 x 16 Mush washer screws).

Repeat this process for all brackets and straps, and remaining French door panel.

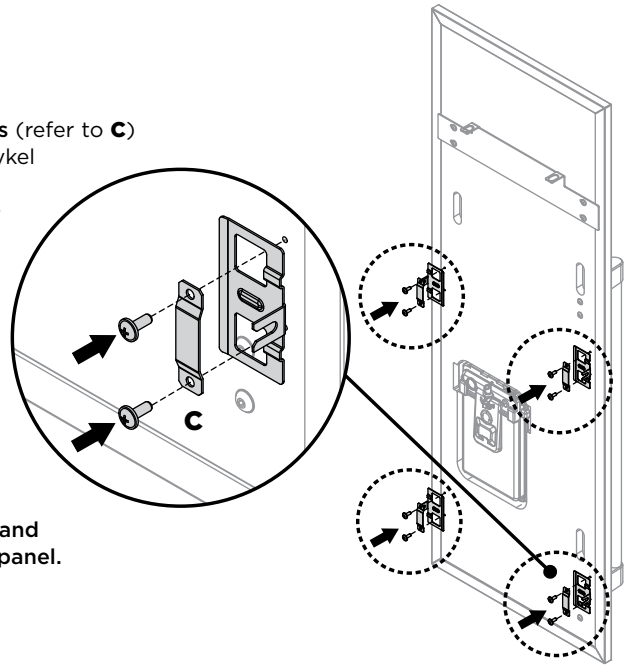

Drawer door panel

4 **Mounting handle** (refer to **D**)
For DCS by Fisher & Paykel door panel sets, remove the plastic plugs from the handle holes x4. Align the handle to the holes and secure with screw handle x4 (M5 x 25 pan head socket screws).

For custom panels, ensure handle screw heads are counter sunk into the back of the panel to avoid interference with hanging bracket.

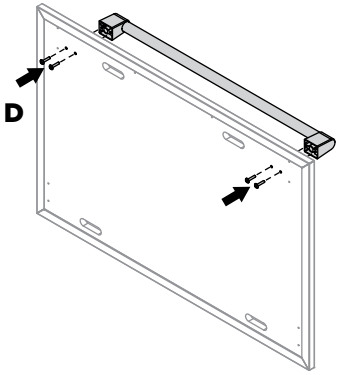

5 **Hanging bracket** (refer to **E**)
For DCS by Fisher & Paykel door panel sets, align the bracket to the holes and secure with screws x6 (M5 x 14 Mush Phillips SS).

For custom panels, secure bracket with screws x6 (#8 x 16 Mush washer screws).

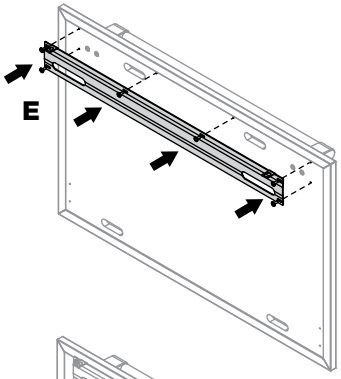

6 **Side brackets and straps** (refer to **F**)
For DCS by Fisher & Paykel door panel sets, align bracket and strap to the holes on the side of the panel and secure with screws x2 (M5 x 14 Mush Phillips SS).

For custom panels, secure bracket with screws x2 (#8 x 16 Mush washer screws).

Repeat this process for all brackets and straps.

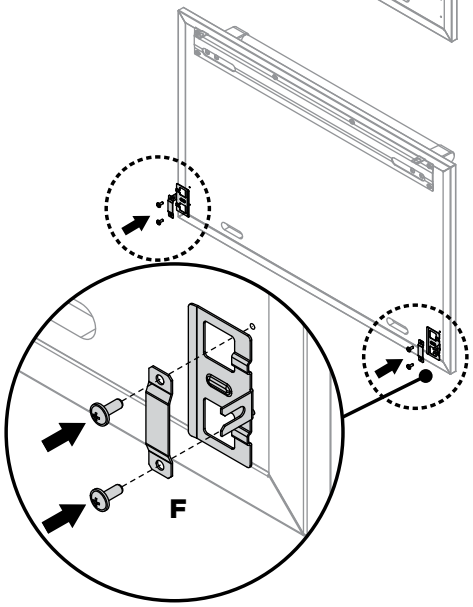

⑮ HANGING ICE & WATER DOOR PANEL

1 Remove the external display module from inside the product.

Thread the display harness through the door panel cavity. Ensure the grommet is engaged.

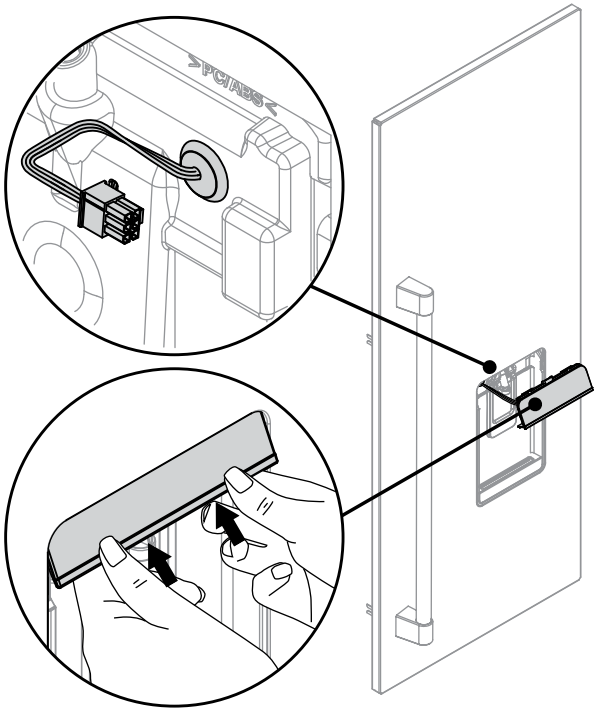

2 Angle top display tabs into the door panel. Ensure the harness is free of pinching. Firmly push against bottom display tabs and insert into the door panel until you feel it clip securely. Ensure the display is flush with the door panel.

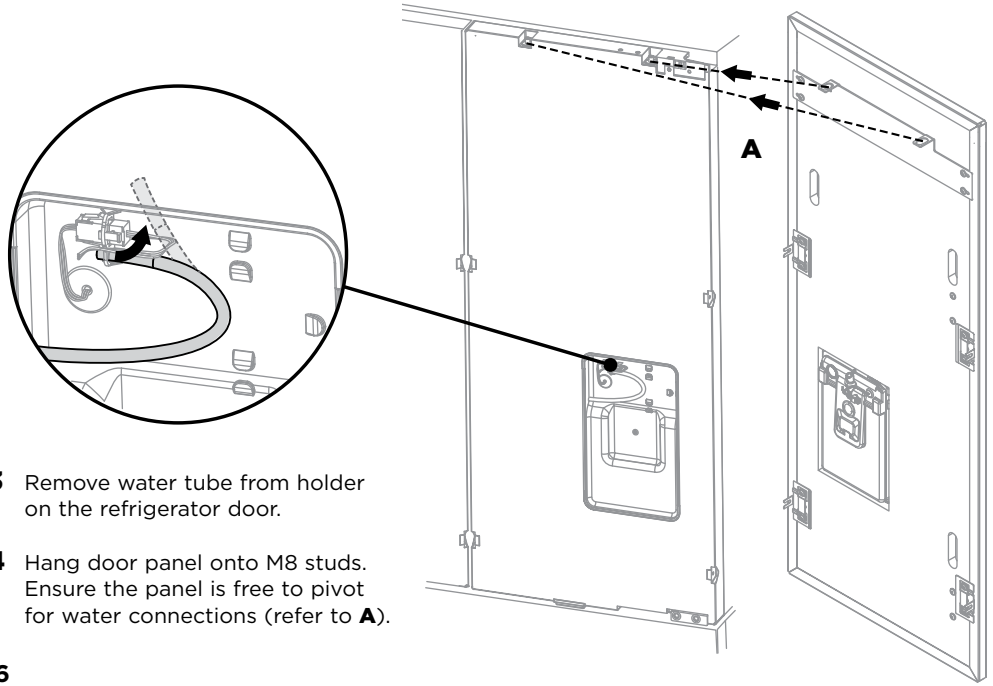

3 Remove water tube from holder on the refrigerator door.

4 Hang door panel onto M8 studs. Ensure the panel is free to pivot for water connections (refer to **A**).

5 Connect display harness onto the refrigerator door by inserting firmly until you feel it clip securely (refer to **B**).

On the external display, enable the dispenser lock, this will help prevent any water from dispensing during water connection. To lock, press the button for 4 seconds. The LED above the button will illuminate.

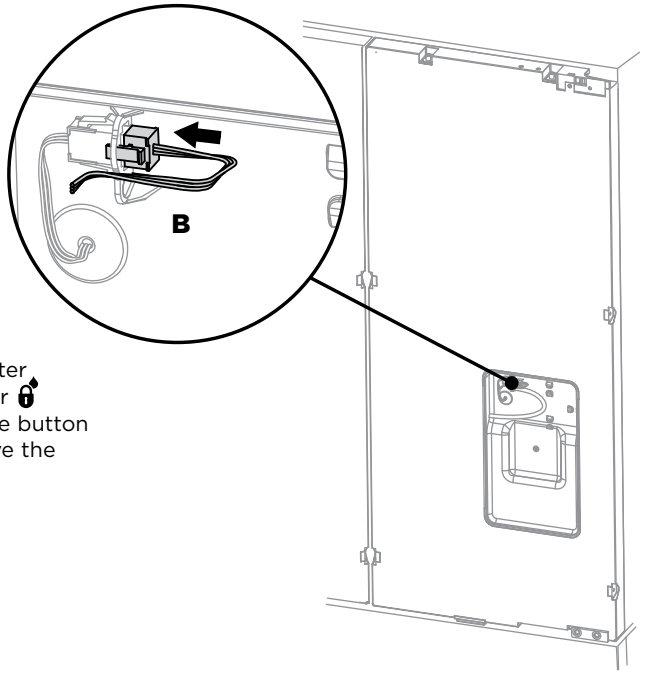

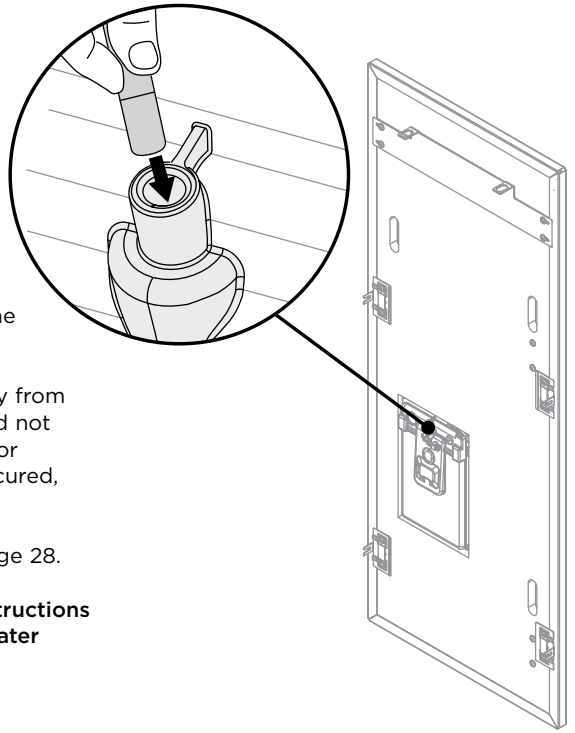

6 Firmly push the water tube into the spigot behind the door panel until the marked line is not visible.

Ensure the water tube is routed away from any sharp objects, sharp corners, and not in a location where it can be kinked or squashed when the door panel is secured, (as this will stop water flow).

Flush water filtration system. See page 28.

To secure door panel, follow the instructions in the next section: 'Hanging non-Water dispensing door panels'.

1 Hang all door panels onto M8 studs and align the side bracket forks onto the refrigerator door.

- Ensure the forks are positioned around the body of the side screws (M5 x 10 pan head Phillips screw).
- Ensure the gap between the top of the door panel and the top cabinetry is no greater than 7 mm. To reduce this gap, raise the product by turning all four adjustment nuts the same number of turns.

IMPORTANT!

Failure to follow these steps can lead to difficulties in door panel adjustment and cosmetic cap fitment.

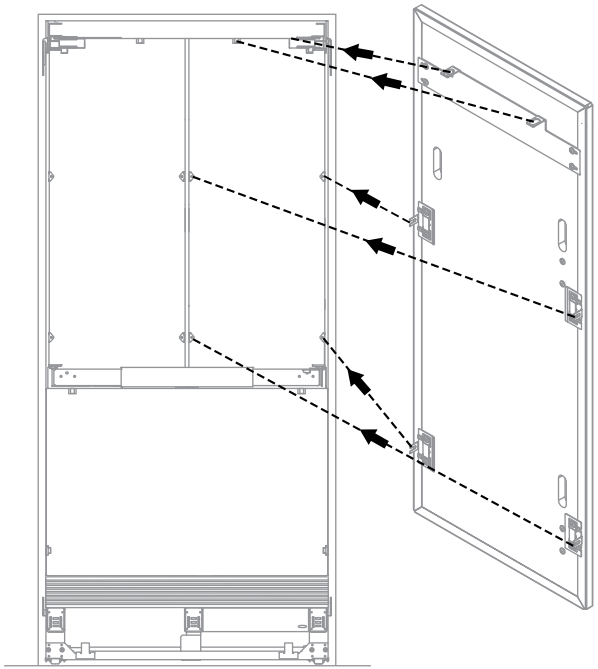

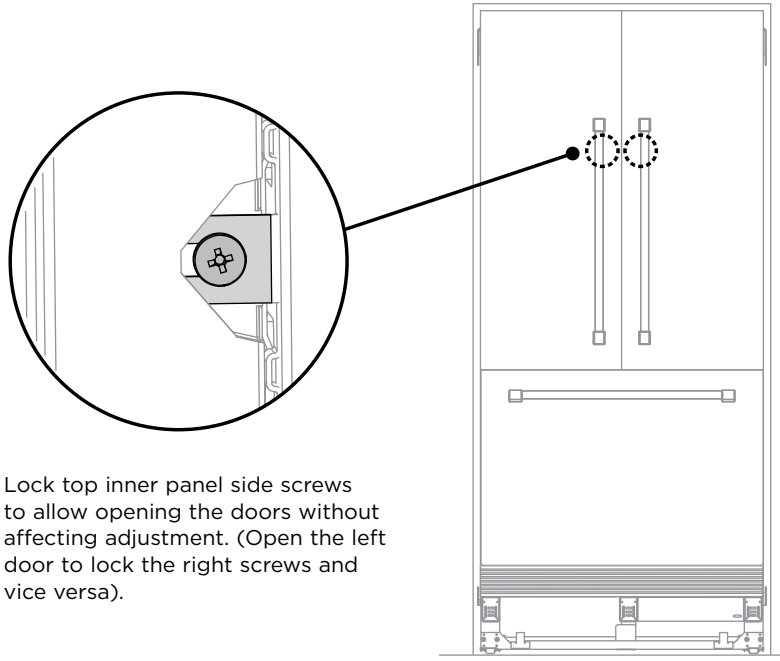

2 Lock top inner panel side screws to allow opening the doors without affecting adjustment. (Open the left door to lock the right screws and vice versa).

3 All door panels have full axis adjustment to ensure they are flush with adjacent walls. To adjust the height of each panel turn clockwise to raise stud or counter-clockwise to lower stud (refer to **A**).

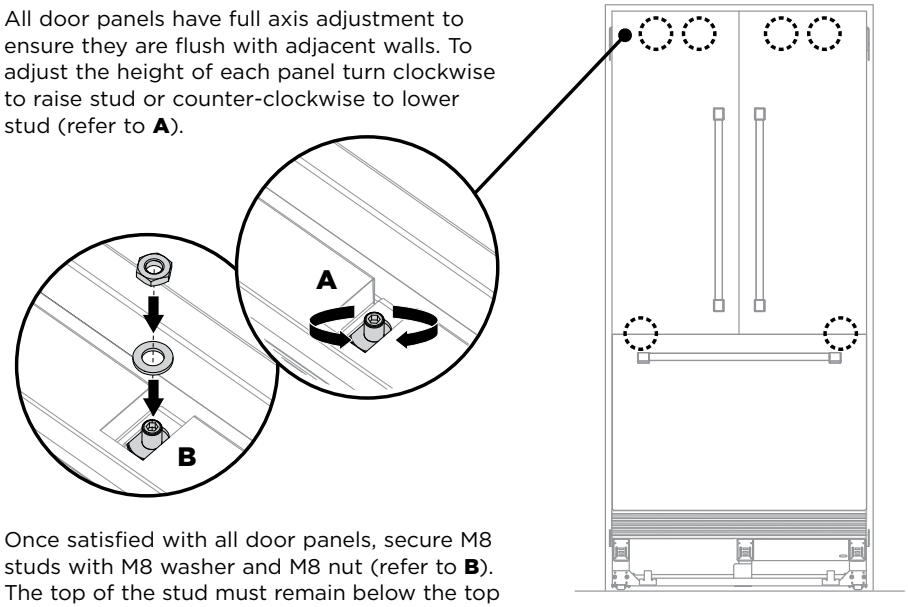

4 Once satisfied with all door panels, secure M8 studs with M8 washer and M8 nut (refer to **B**). The top of the stud must remain below the top face of the door panel.

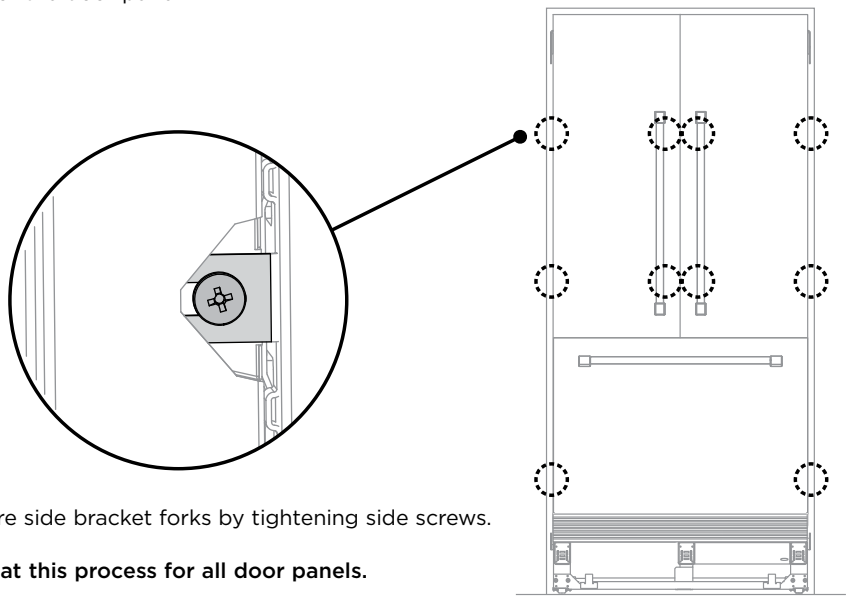

5 Secure side bracket forks by tightening side screws.

Repeat this process for all door panels.

Note: for depth adjustment loosen side screws x4, adjust panels and then retighten once satisfied.

Note: further adjustment of door panels can be achieved by removing door panels then loosening the fixing screws for the hanging bracket and moving the bracket sideways to suit.

(17) ICE AND WATER INITIATION

Ensure the appliance is switched on and the isolation faucet has been connected and turned on.

Ice maker initiation

To initiate ice maker before use:

- When the appliance is first turned on after installation, the ice maker will be off.
- To activate the automatic ice maker, press the 'Ice On/Off' button once. The LED light above the button will illuminate indicating the ice maker is on.
- Press and hold the , − and + together for 4 seconds then close the doors. The ice tray will flip twice and empty the water into the bin below. The ice tray will flip only after the doors are closed.
- Force another cycle, this step helps remove any manufacturing and transportation dust in the ice tray.
- Empty the water and correctly replace the bin, ensuring the scoop is located at the front of the bin.
- Once the ice maker is in operation, discard the first 24 hours of ice. This will flush away any impurities in the water line.

For more information on making ice please refer to the User Guide supplied with this appliance.

Water dispenser initiation (Ice & Water models only)

To flush the water filtration system before use:

- Press the water dispenser pad until water dispenses, this will displace trapped air in the water tank and filter system. This will take at least 2 minutes. Once the water has dispensed, rest the dispenser for 2 minutes.
- Dispense and discard 4 qt (4 L) of water, then rest the dispenser pad for a further 2 minutes.
- Dispense and discard a further 4 qt (4 L) of water. Failure to do this will result in excessive dripping from the dispenser.
- Once installation is complete, a few drips may appear out of the dispenser over the next few days to clear the remaining trapped air.
- Ensure the refrigerator has cooled for at least 2 hours before use.

Water dispenser

IMPORTANT!

Do not continually dispense water for longer than 2 minutes at a time.

For more information on water dispensing please refer to the User Guide supplied with this appliance.

(18) ATTACH FIXING BRACKETS

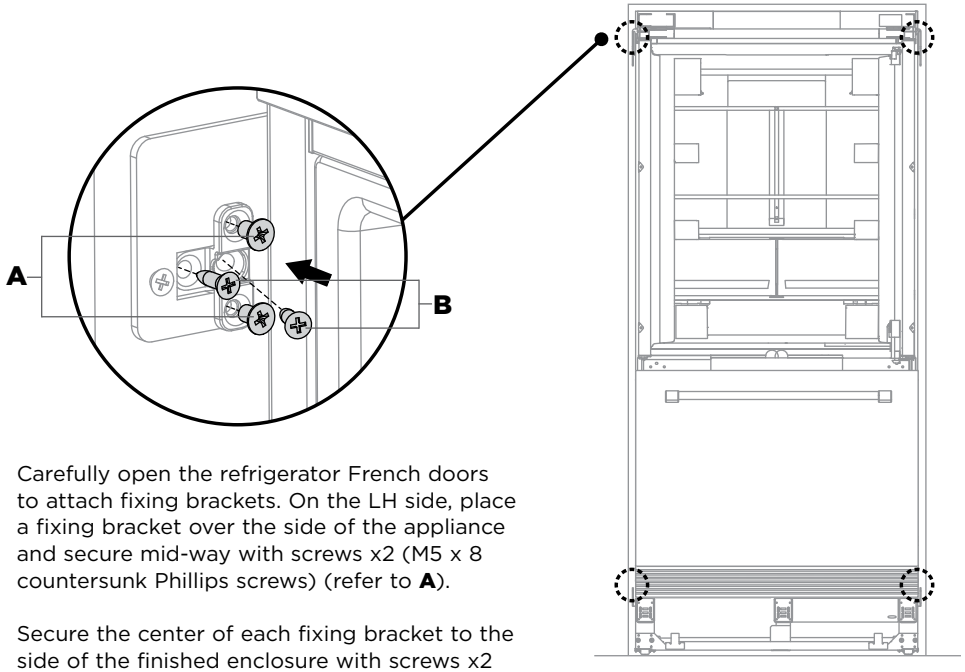

1 Carefully open the refrigerator French doors to attach fixing brackets. On the LH side, place a fixing bracket over the side of the appliance and secure mid-way with screws x2 (M5 x 8 countersunk Phillips screws) (refer to **A**).

2 Secure the center of each fixing bracket to the side of the finished enclosure with screws x2 located at **B** (#8 x 19 twin thread screws).

Repeat this process for the remaining brackets.

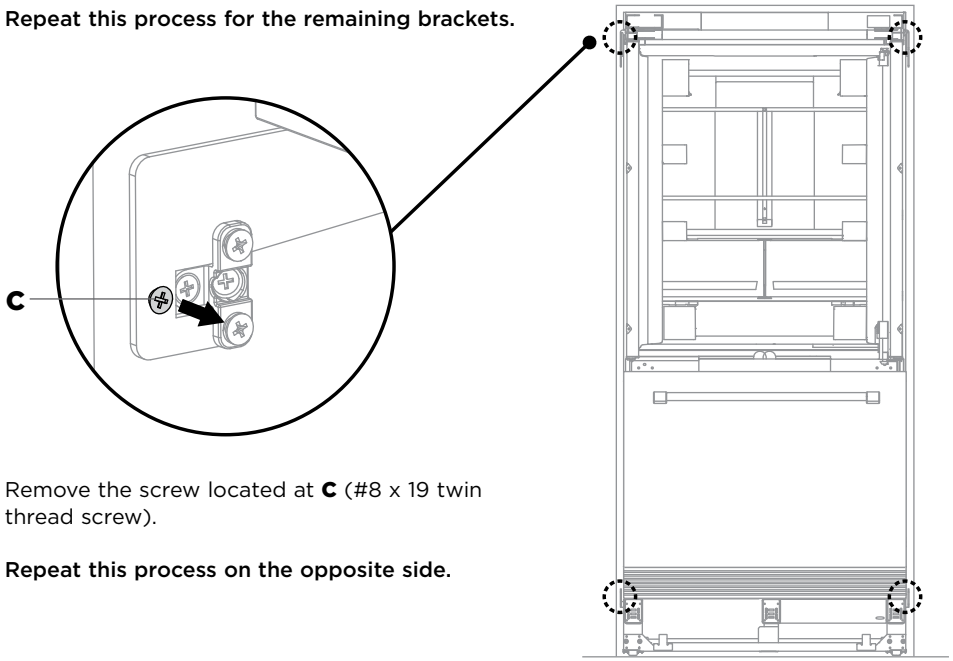

3 Remove the screw located at **C** (#8 x 19 twin thread screw).

Repeat this process on the opposite side.

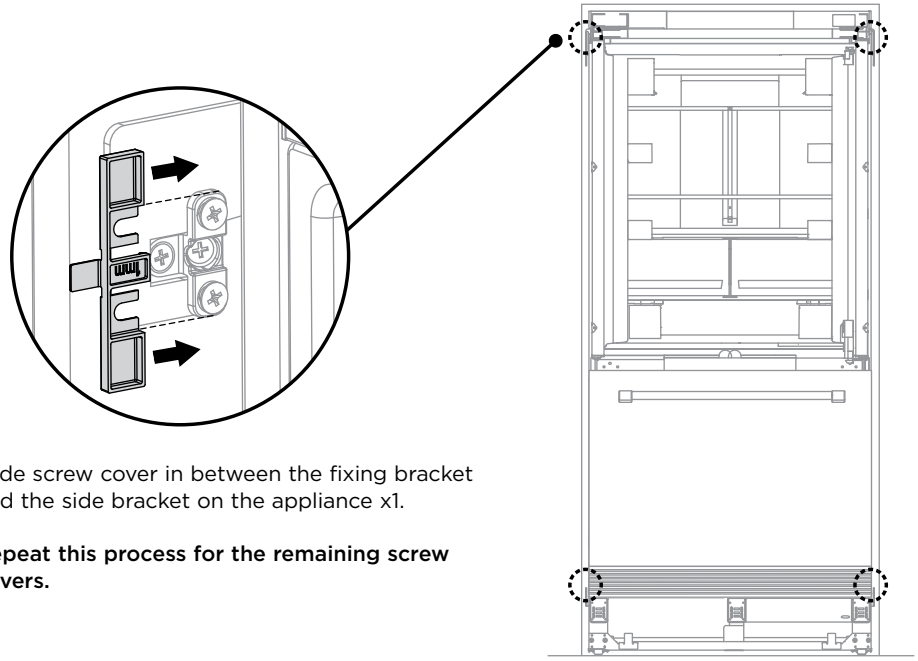

4 Slide screw cover in between the fixing bracket and the side bracket on the appliance x1.

Repeat this process for the remaining screw covers.

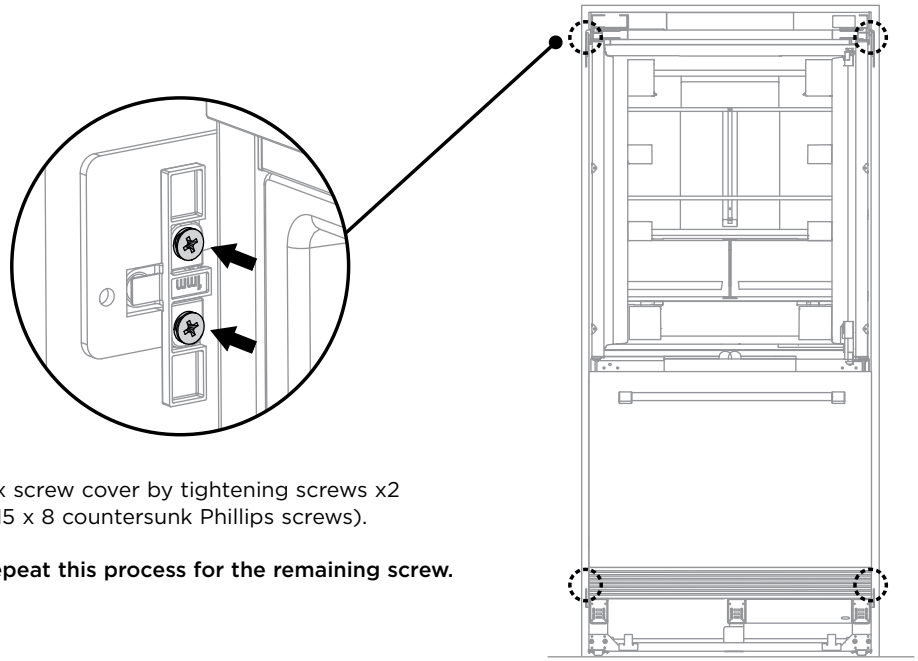

5 Fix screw cover by tightening screws x2 (M5 x 8 countersunk Phillips screws).

Repeat this process for the remaining screw.

⑲ ATTACH COVERS AND TOE KICK

1 Remove any remaining protective film on your door panels.

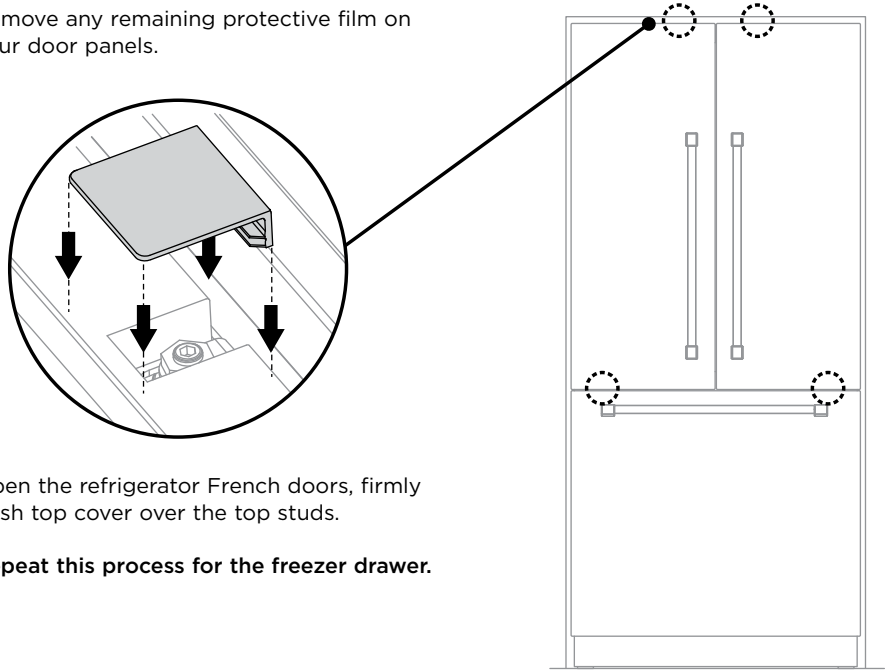

2 Open the refrigerator French doors, firmly push top cover over the top studs.

Repeat this process for the freezer drawer.

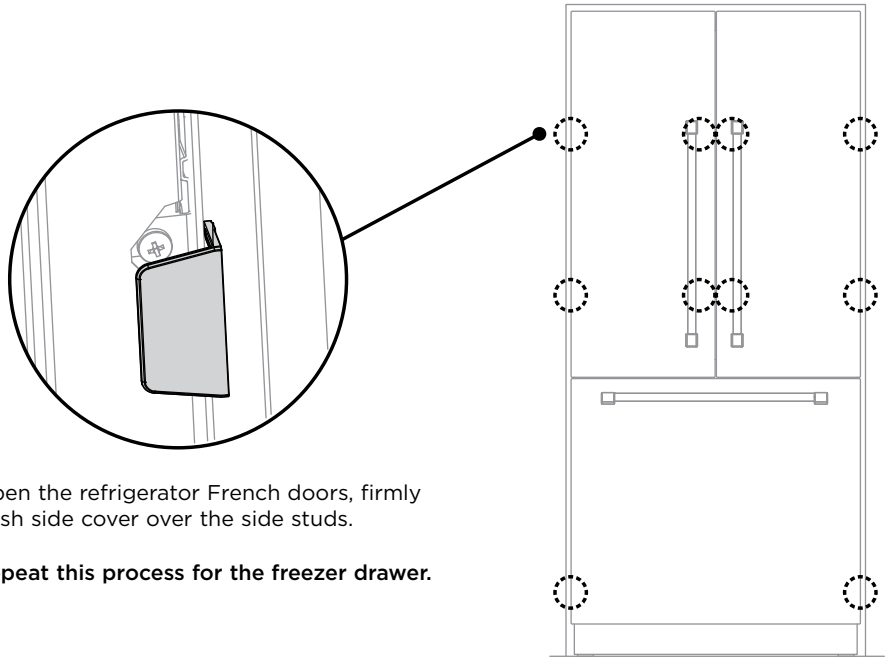

3 Open the refrigerator French doors, firmly push side cover over the side studs.

Repeat this process for the freezer drawer.

Note: To complete the integrated appliance, the customer should supply their own toe kick for installation. The hardware required to mount the toe kick is supplied.

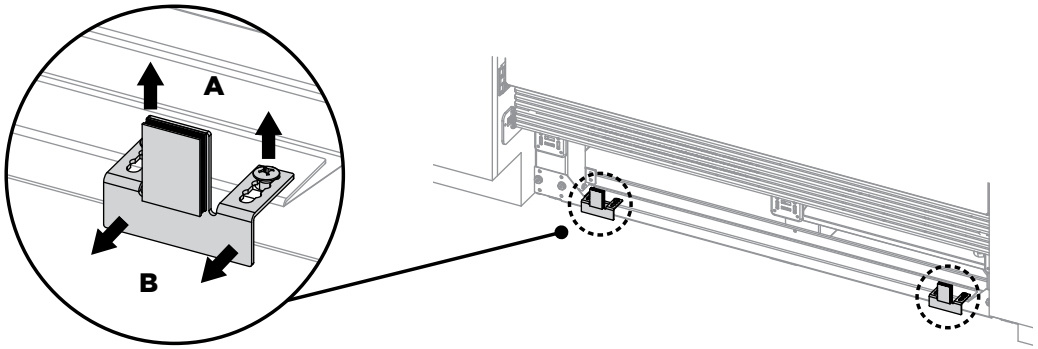

4 **Installing toe kick**
Unscrew the toe kick bracket screws mid-way, and bring forward (refer to **A** and **B**).

Repeat this process on the opposite side.

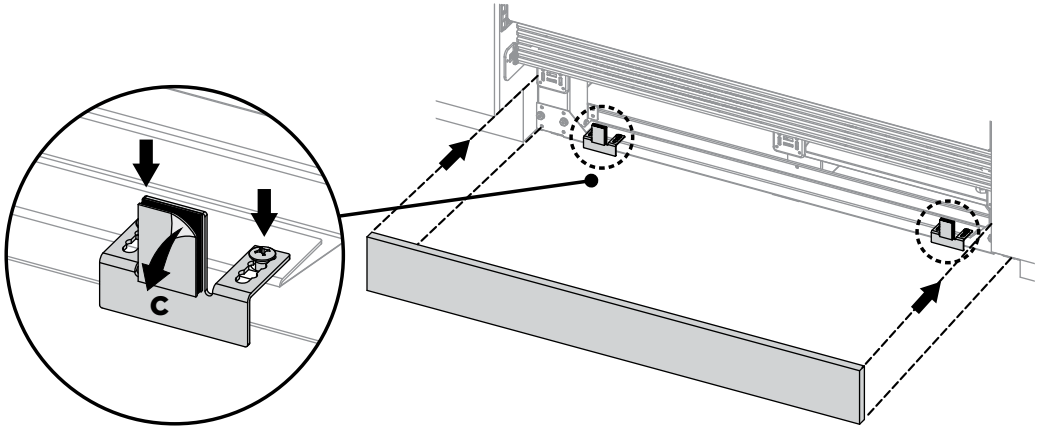

5 Place toe kick in front of the brackets and gently push towards the appliance until flush with surrounding cabinetry. Once satisfied, remove the toe kick.

6 Tighten the toe kick bracket screws to lock brackets into position and remove the backing from the Velcro strip (refer to **C**). Attach toe kick to the adhesive surface.

(20) ATTACH BOTTOM KICKSTRIP

For toe kick installation higher than 4” (102 mm)

1 Measure the required height for the bottom grille. On a board, carefully score/cut the un-required vanes from the bottom of the kickstrip grille and discard (refer to **A**).

2 Drill Ø 5⁄32” (4 mm) holes into the dimples of the grille (refer to **B**).

Repeat this process for all dimples.

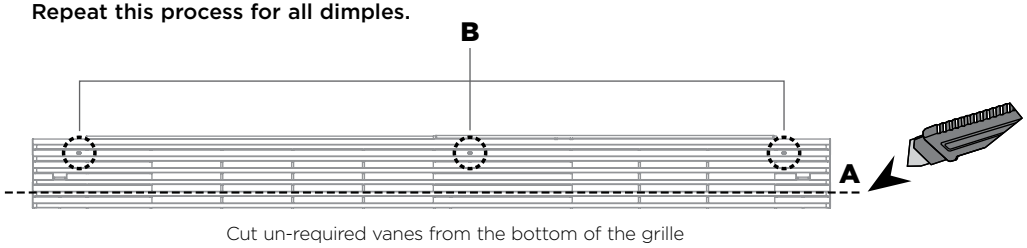

Cut un-required vanes from the bottom of the grille

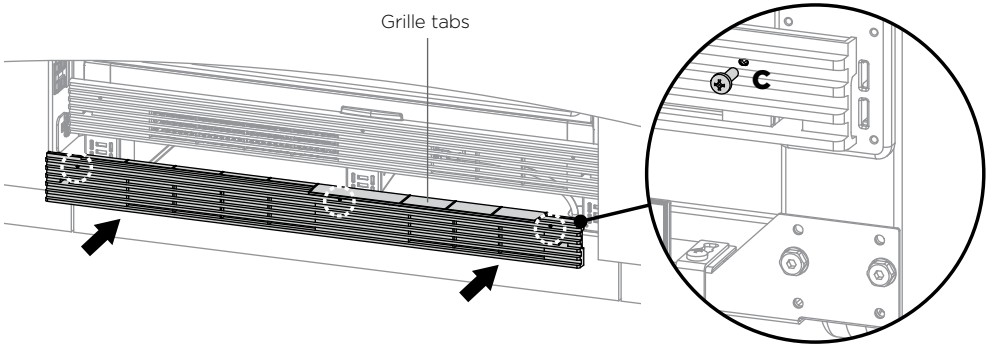

3 With the grille tabs facing upwards, align the grille to the bottom of the plinth where the screw holes are located and secure with screws x3 (#8 x 5⁄8 pan head screws) (refer to **C**).

Align the air flow divider underneath the grille tabs indicator and clip onto the vanes of the bottom grille (refer to **D**).

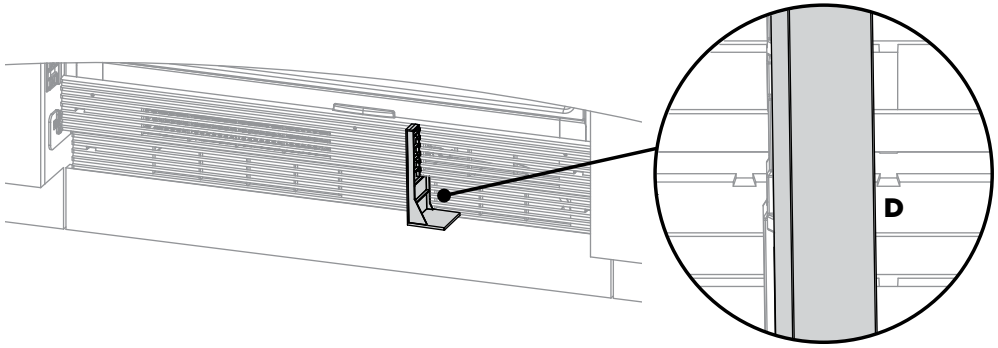

For toe kick installation at 4” (102 mm)

1 With the grille tabs facing upwards, align the grille clips to the bottom of the plinth’s slots, then firmly push grille onto the plinth (refer to **A**).

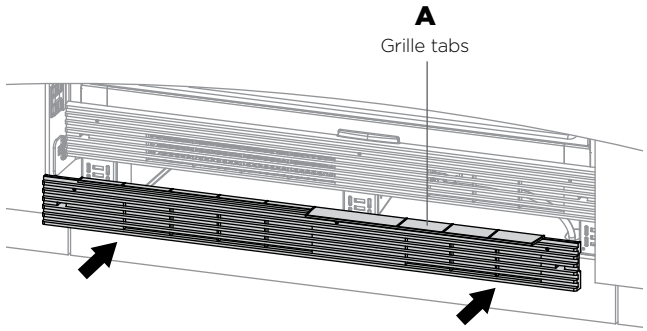

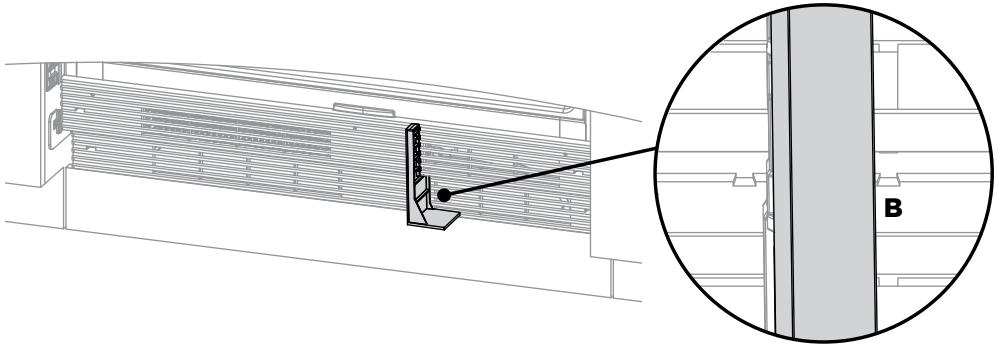

2 Align the air flow divider underneath the grille tabs indicator and clip onto the vanes of the bottom grille (refer to **B**).

(21) ATTACH SIDE TRIM BRACKETS

IMPORTANT!

Before installing your appliance, ensure the dimensions of the finished enclosure are correct for your appliance following the 'Product and cavity dimensions' sections.

Frameless cabinetry installation
(opened cabinetry doors)

1 Break off the datum lip to each side trim bracket and discard.

Repeat for all side trim brackets.

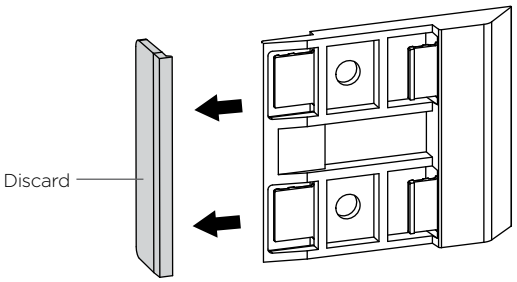

2 Position three side trim brackets on each side (refer to **A** for bracket locations). Open the appliance doors. Measure 2" (50 mm) from the front face of the appliance (from behind the doors), to the front of the alcove and accurately mark a vertical line (refer to **B**).

Align the bracket edge with the marked line and using screws x2 (#8 x 16 mush washer) fix the bracket to the cabinetry x3.

Repeat on the opposite side.

IMPORTANT!

Inaccurate positioning of bracket can result in inability to fit side trim or gaps between side trim and appliance.

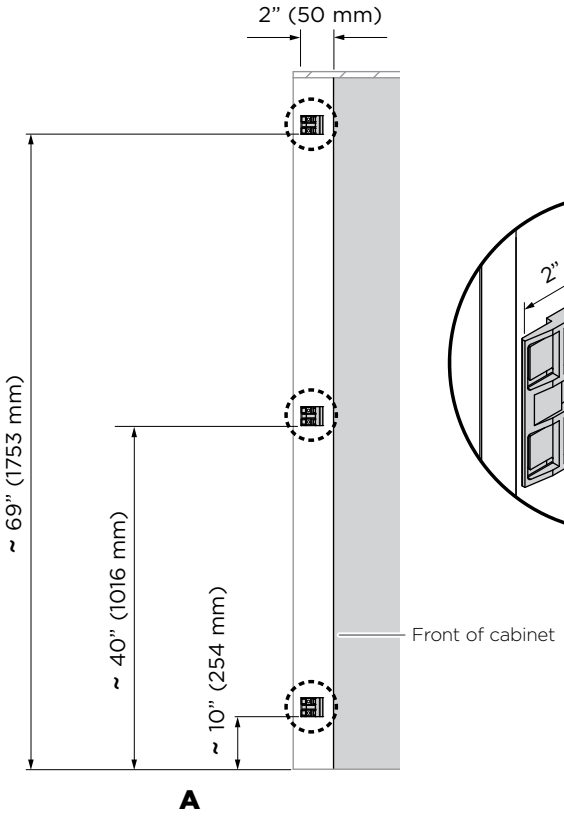

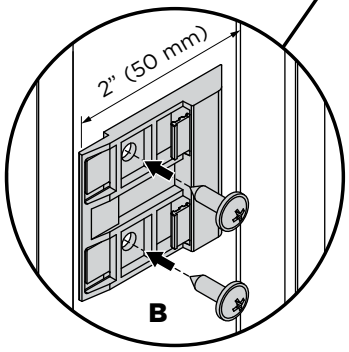

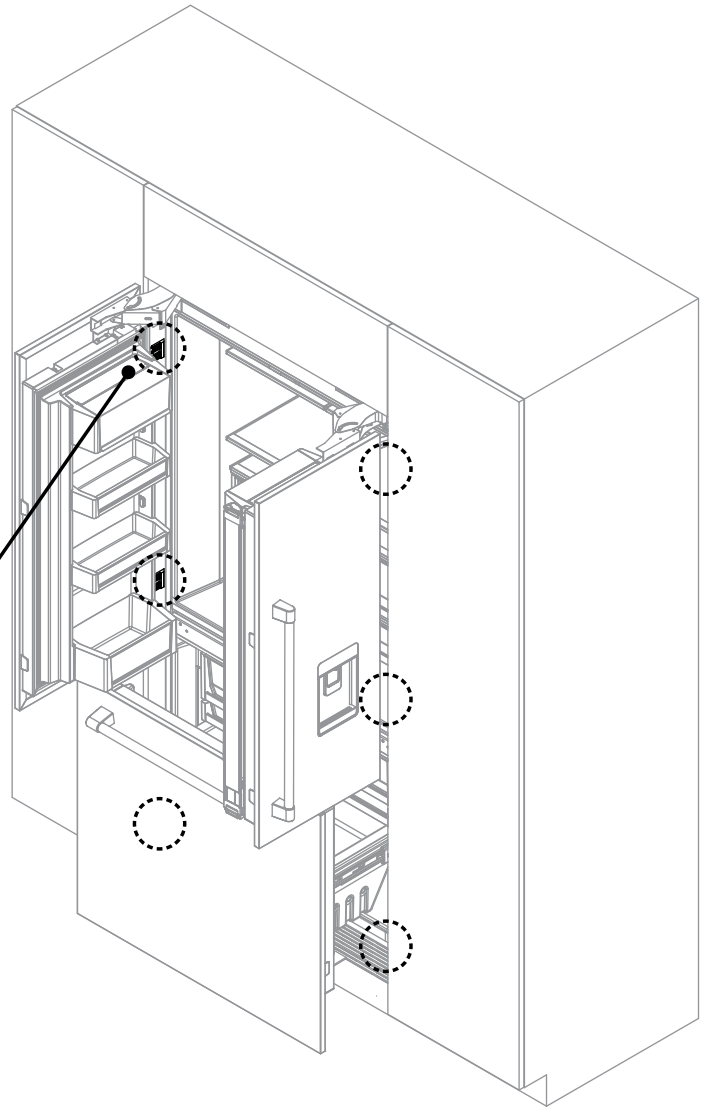

For 80” (2032 mm) cavity installation only

Measure 4” (102 mm) from the top, shorter side trim and carefully cut using a fine tooth hacksaw to a length of 76“ (1930 mm). Refer to **A** for orientation of side trim.

Note: ensure cut is straight and square as this is an exposed surface. Also ensure the plastic part does not bend as this can cause visual stress marks.

Repeat this process for the remaining side trim.

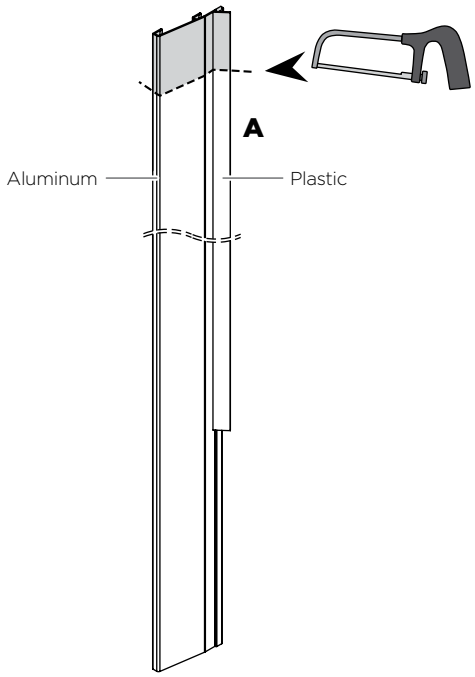

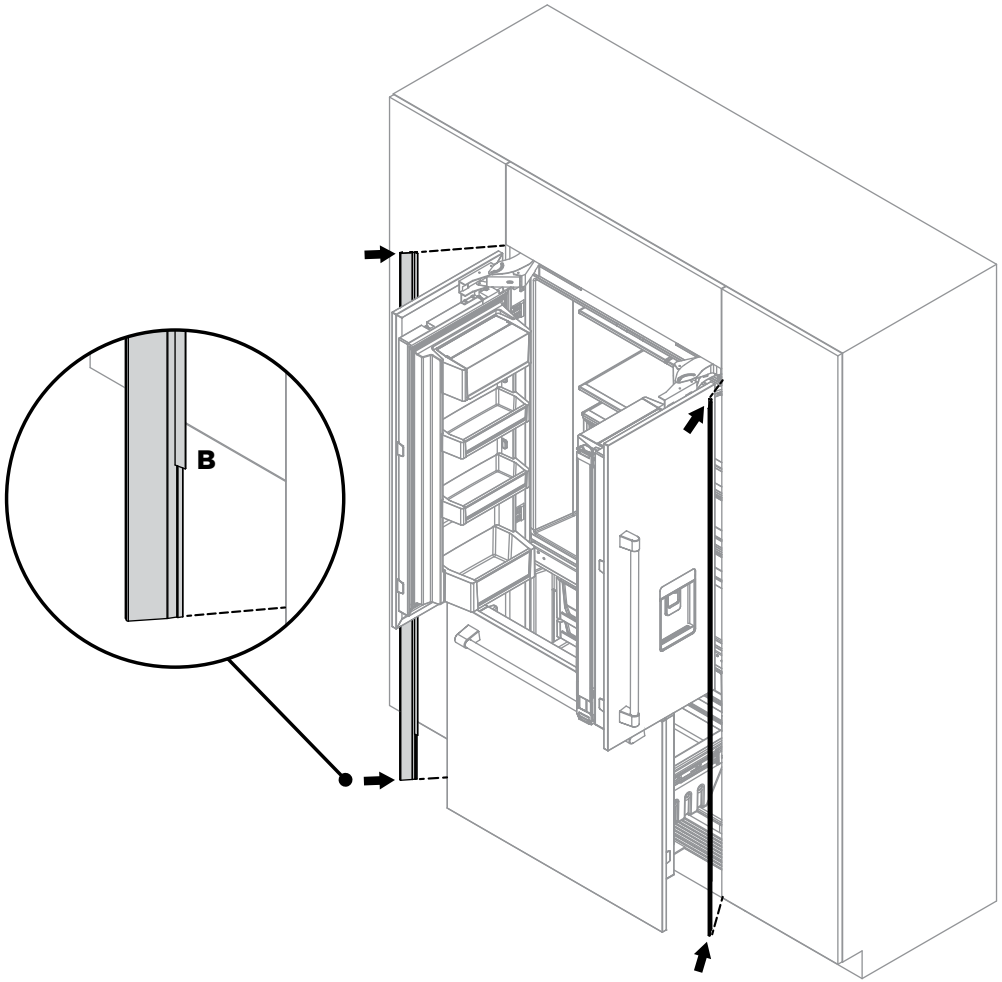

For 80” (2032 mm) and 84” (2134 mm) cavity installations

1 Place the side trim against the alcove side wall with the shorter lip facing the bottom (refer to **B**).

- Ensure the side trim is positioned as high as it will go.
- Engage the side trim with the brackets by pushing the trim inwards at the locations of the top and middle side trim brackets. Once the trim has engaged with top and middle brackets, then push and engage the side trim at the location of the bottom bracket (refer to **C**).

IMPORTANT!

- **Ensure there are no visual gaps between the product and side trims.**
- **Each bracket has two engagement points for the trim to locate. Ensure the trim is engaged at both points (refer to D).**

Repeat this process for the remaining side trim.

Correct visual gaps by loosening side trim screws and moving trim within clearance. If further adjustment is required, relocate brackets to desired position.

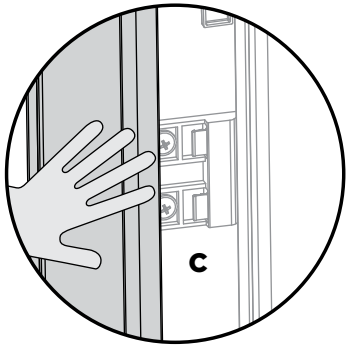

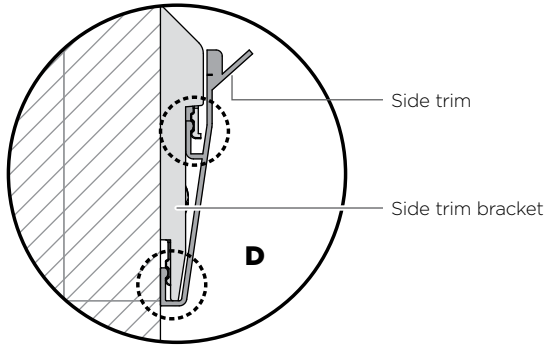

Top view of side trim engaged correctly in side trim bracket

(23) ADJUSTING HINGE TENSIONING SCREWS

Hinge tensioning screws can be tightened if increased door closing force is required.

1 To ensure the French doors shut on their own, when pushed within the self close activation range, the hinge tensioning screws need to be tightened. The hinge tensioning screw is located in the French door hinges. To tighten the screw, rotate the screw to the right (refer to **A**).

Repeat this process on the opposite side.

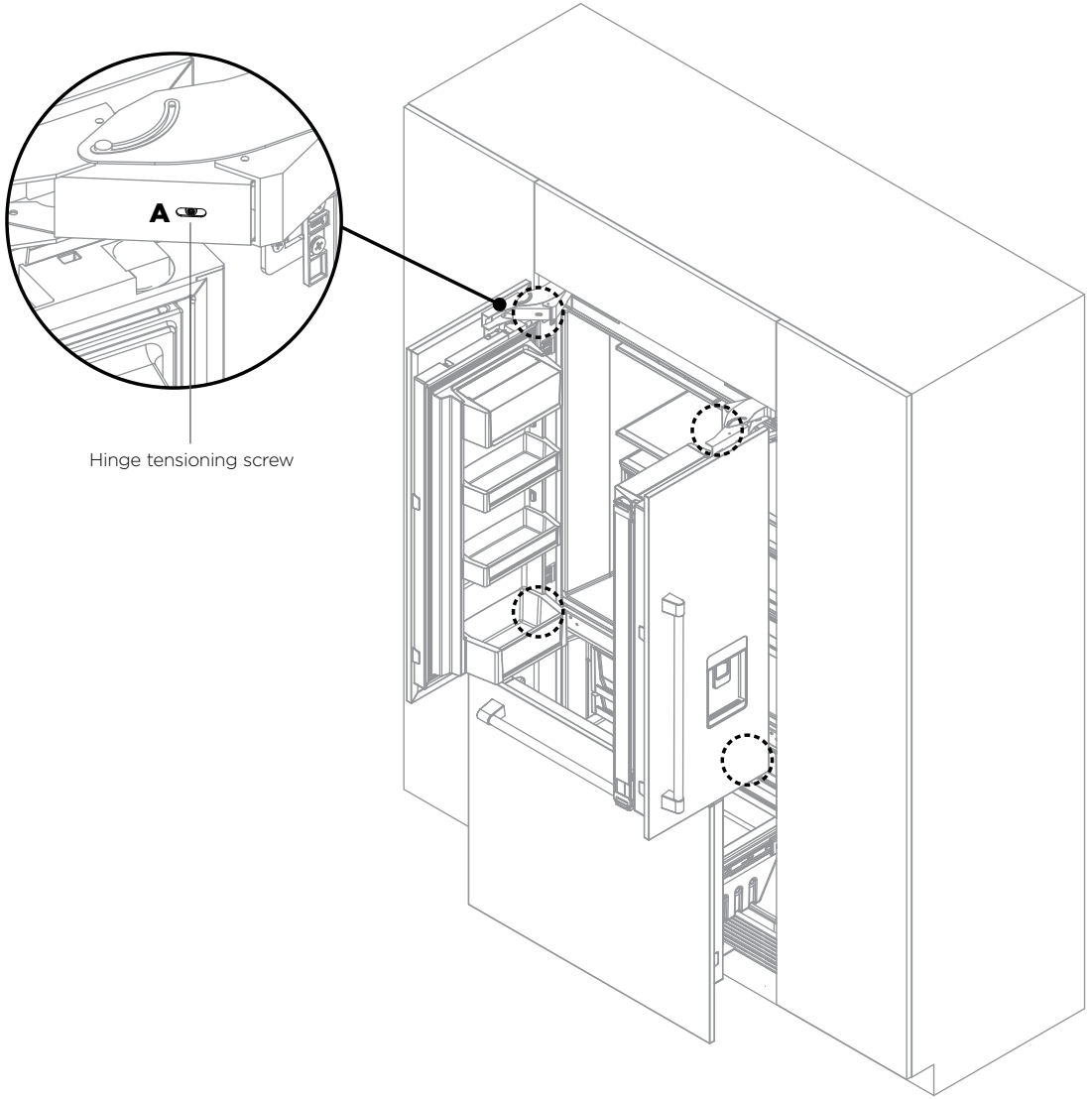

24 FINAL CHECKLIST

✓ **TO BE COMPLETED BY THE INSTALLER**

All models

- ☐ Check all parts are installed.
- ☐ Ensure the appliance is level.
- ☐ Ensure the appliance is securely fastened to the cabinetry with the supplied anti-tip bracket and fittings.
- ☐ Ensure the doors/drawer can open and close freely with no resistance from surrounding cabinetry.
- ☐ Ensure hinge limiting pin is fitted for 90° door swing.
- ☐ Ensure all internal and external packaging is removed from the appliance before use.
- ☐ Ensure a manual ice maker cycle has been forced.

Ice & Water models only

- ☐ Ensure the water filtration system has been flushed.

Complete and keep for safe reference:

Model _____

Serial No. _____

Purchase Date _____

Purchaser _____

Dealer Address _____

Installer's Name _____

Installer's Signature _____

Installation Company _____

Installation Date _____

www.dcsappliances.com

Copyright © Dynamic Cooking System, Inc 2015. All rights reserved.
The product specifications in this booklet apply to the specific products and models described at the date of issue. Under our policy of continuous product improvement, these specifications may change at any time. You should therefore check with your Dealer to ensure this booklet correctly describes the product currently available.

US CA

841337 B 08.15