BERTAZZONI

REF31BMXL
REF31BMXR

USER'S OPERATION MANUAL

Before operating this unit, please read this manual thoroughly, and retain for future reference

Contents

Brief introduction……2
Important safety instructions……2
Installing your new appliance……...4
Description of the appliance……6
Display controls……...6
Using your appliance……8
Helpful hints and tips…… 10
Cleaning and care……11
Troubleshooting……12
Disposal of the appliance……13

Brief introduction

Thank you for your choosing Bertazzoni products. We are sure you will find your new appliance a pleasure to use. Before you use the appliance, we recommend that you read through these instructions carefully, which provides details about its usage and functions.

- Please ensure that all people using this appliance are familiar with its operations and safety features. It is important that you install the appliance correctly and follow the safety instructions please remove.
- We recommend that you keep this user's manual with the appliance for future reference and retain it to any future users.
- This appliance is intended to be used in household and similar applications such as:

-Staff kitchen- areas in shops, offices and other working environments;
-Farmhouses by clients in hotels, motels and other residential types of environment;
-Bed and breakfast type of environments.

- If you feel that the appliance is not operating correctly, please check the Troubleshooting page for assistance. If still in doubt, please contactthe customer service help line for assistance.

Important safety instructions

General safety and daily use

It is important to use your appliance safely. We recommend that you follow the guidelines below.

Store any food in accordance with the storage instructions from the food manufacturer.

Don't use mechanical devices or any other means to speed up the defrosting process, unless they are approved by the manufacturer.

- Don't try to repair the appliance yourself. It is dangerous to alter the specifications or modify this product in any way. Any damage to the cord may cause a short circuit, fire or electric shock.
- Pay attention not to damage the tubing of the refrigerant circuit.
- Don't place too much food directly against the air outlet on the rear wall of both the refrigerator and freezer compartment, as it affects sufficient air circulation.

- Don't place hot items near the plastic components of this appliance.
Frozen food must not be refrozen once it has been thawed out.
- Don't store bottled or canned drinks (especially carbonated drinks) in the freezer compartment. Bottles and cans may explode.
- Do not consume ice popsicles or ice cubes straight from the freezer as this can cause freezer burn to the mouth and lips.
- To avoid items falling and causing please remove damage to the appliance, do not overload the door racks or put too much food in the crisper drawers.

Safety for children and infirm persons

⚠ This appliance is not intended for use by persons (including children) with reduced physical, sensory or mental capabilities, or a lack of experience and knowledge, unless they have been given supervision or instruction concerning the use of the appliance by a person responsible for their safety. Children should be supervised to ensure that they do not play with the appliance.
- Keep all packaging away from children to avoid risk of suffocation.
- Protect children from being scalded by touching the very hot compressor at the rear bottom of appliance
- Don't place items on top of the appliance as this could cause injury should they fall off.
- Never allow children to play with the appliance by hanging or standing over or on the doors, racks, shelves and drawers etc.

Safety about Instructions

⚠ To avoid the risks that are always present when using an electric appliance, we recommend that you carefully read the below instructions.

- Unpack the appliance and check through the appliance. Should any damage be evident, don't plug in the appliance and contact the store immediately from which you purchased it. Keep all packing materials in this case.
- We recommend that you wait for 4 hours before plugging in the appliance to allow the refrigerant to flow back into the compressor.
- The appliance must be applied with single phase alternating current of 115V/60Hz. If the voltage fluctuates exceeding the upper limit, A.C. automatic voltage regulator of more than 350W should be applied to the refrigerator for safety use.
- The mains plug must be accessible when the appliance is installed.
- This appliance must be grounded.
−This appliance is fitted with a plug in accordance with local standard. The 3 prong plug should be suitable for use in all houses fitted with sockets in accordance with current specifications.

- Do not use extension cords or multiple sockets which could cause overloading of wiring circuits and could cause a fire.
Always plug your appliance into its own individual electrical socket which has a voltage rating that matched the rating plate.
- Make sure that the plug is not squashed or damaged. Otherwise, it may cause short circuit, electrical shock, overheat and even cause a fire.
- Do not insert the mains plug if the socket is loose, there is a risk of electric shock or fire.

- Switch off the appliance and disconnect it from the main power before you clean or move it.
- Never unplug the appliance by pulling on the electrical cord. Always grip the plug firmly and pull straight out from the socket to prevent damage to the power cord.
- Do not operate the appliance without the light cover of interior lighting.
- Any electrical component must be replaced or repaired by a qualified electrician or authorized service engineer. Only genuine parts should be used.
- Do not use electrical appliances such as ice cream makers inside the food storage compartments of the appliance, unless they are approved by the manufacturer.
- Do not look direct into the LED light located in the refrigerator compartment without optical instruments to avoid eye injuries. If it is not functioning correctly, consult a qualified, registered electrician or replace it in accordance with the “Cleaning and Care” chapter.

Risk of fire and R600a refrigerant

The appliance contains a small quantity of refrigerant ISOBUTANE (R600a) in the refrigerant circuit. It is environmentally friendly and non-synthetic,but nevertheless flammable.

- Ensure that no parts of the refrigerant circuit are damaged anytime.
- Avoid open flames and sources of ignition.
- Ventilate the room thoroughly in which the appliance is located.
- Never store flammable liquids or liquids inside the refrigerator, which there is a risk of explosion.
- Don't store explosive substances such as aerosol cans with a flammable propellant in this appliance.
- Keep burning candles, lamps or any other items with baked flames away from the appliance to avoid risk of fire.

Installing your new appliance

Before using the appliance for the first time, you should be informed of the following tips.

Ventilation of appliance

In order to improve efficiency of the cooling system and save energy, it is necessary to maintain good ventilation around the appliance for the dissipation of heat. Therefore we recommend to have at least 75 mm(3") of clearance from the back to the wall, at least 100mm (4") from its top,at last 100mm (4") from its side to the wall and a clear space in front to allow the doors to open 145°,as shown in following diagrams.

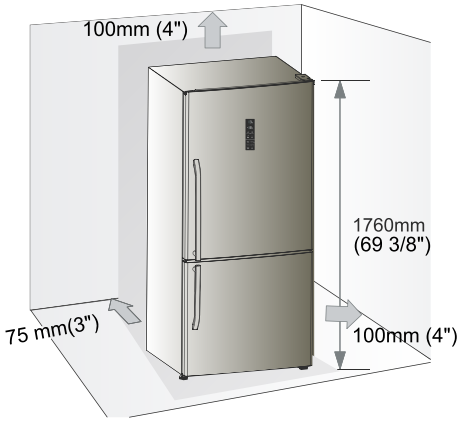

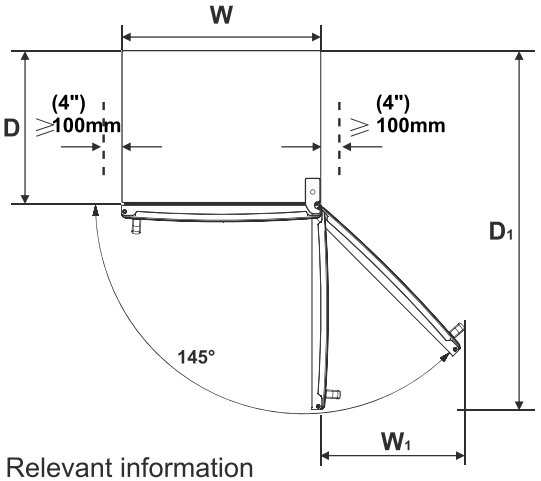

Relevant information

Dimension /mm / Model	W	W1	D	D1
————	680	525	600	1315
REF31BMXL REF31BMXR	790	610	600	1425

Dimension /in / Model	W	W1	D	D1
————	26.8	20.7	23.6	51.8
REF31BMXL REF31BMXR	31.1	24.0	23.6	56.1

Note:

This appliance performs well with ambient temperature between 12.8°C to 43.3°C (55 ℉~110 ℉). The Appliance may not work properly if it is left for a long period at a temperature above or below the indicated range.

- Install your appliance in a dry place and avoid high moisture areas such as basement, garages etc..
- Keep the appliance out of direct sunlight, rain or frost. Install the appliance away from heat sources such as stoves, fires or heaters.

Leveling of appliance

The appliance should be levelled in order to eliminate vibration.To level the unit, please complete the following steps.

1. Roll the refrigerator into place.
2. Turn the adjustable feet (with your fingers or a suitable spanner) until it touches the floor.
3. Tilt back the top backwards for about 10-15 mm (0.3-0.4") by turning the feet 1-2 turn further. This will allow the doors to selfclose, providing a consistent closed seal.
4. Whenever you want to move the appliance, remember to turn the feet back up so that the appliance can roll freely. Reinstall the appliance when relocating.

Caution! The rollers, which are not castors, should be only used for forward or backward movement. Moving the refrigerator sideways may damage your floor and the rollers.

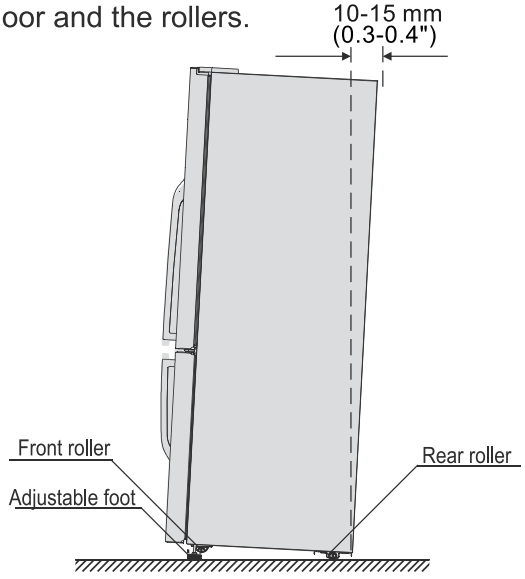

After the installation

- After you have successfully installed the appliance, you should clean it thoroughly before using. Cleaning details can be found in the “Cleaning and care” chapter.

Description of the appliance

1.LED light(inside)
2.Cabinet
3.Door switch
4.Glass shelf
5.Crisper cover
6.Fruit and vegetables crisper (with divider)
7.Twist ice tray
8.Upper freezer drawer
9.Ice storage box(inside)
10.Middle freezer drawer
11.Middle freezer glass shelf
12.Lower freezer drawer
13.Sensor
14.Adjustable foot
15.Roller
16.Magnetic switch
17.Freezer door
18.Freezer door seal
19.Fridge door seal
20.Lower door rack
21.Middle door rack
22.Bottle holder
23.Small door rack
25.Fridge door
26.Covered dairy rack

View of the appliance

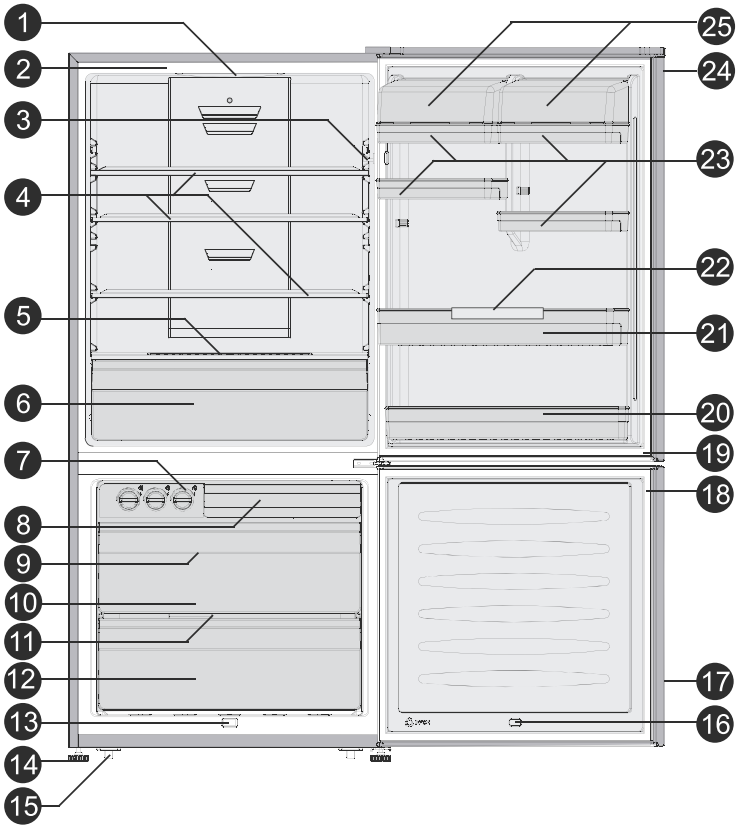

Note:
1.Due to unceasing modification of our products, your refrigerator may be slightly different from this Instruction Manual, but its functions and using methods remain the same.
2.Shelves and drawers are arranged for optimum energy efficiency on delivery.

Display controls

Use your appliance according to the following control regulations. Your appliance has the corresponding functions and modes as the control panels showed in the pictures below. When the appliance is powered on for the first time, the backlighting of the icons on display panel starts working. If no buttons have been pressed and the doors are closed, the backlighting will turn off.

Adjusting the temperature

We recommend that when you start your refrigerator for the first time, the temperature for the refrigerator is set to 4°C/39°F and the freezer to -18°C/-1°F. If you want to change the temperature, follow the instructions below.

Caution! When you set a temperature, you set an average temperature for the whole refrigerator cabinet. Temperatures inside each compartment may vary from the temperature values displayed on the panel, depending on how much food you store and where you place them. Ambient temperature may also affect the actual temperature inside the appliance.

1. °C/°F Change

The temperature can be changed between °C and °F by pressing "Holiday" & "Alarm" button at the same time for 3 seconds.

2. Fridge

Press "Fridge" to set fridge temperature between 2°C/35°F and 8°C/46°F as needed, and control panel will display corresponding values according to the following sequence.

8°C — 7°C — 6°C — 5°C
2°C — 3°C — 4°C

6°F — 5°F — 4°F — 3°F — 2°F — 1°F — 0°F — -1°F — -2°F — -3°F
-12°F — -11°F — -10°F — -9°F — -8°F — -7°F — -6°F — -5°F — -4°F

3. Super Cool

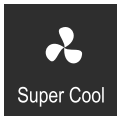

Super Cool can refrigerate your food much faster, keeping food fresh for a longer period

- Press" Super Cool" button to activate this function. The light will come on.
- Super cool automatically switches off after 6 hours and the refrigerator temperature setting displays 2°C/35°F.
- When super cool function is on, you can switch it off by pressing "Super Cool" or "Fridge" button and the refrigerator temperature setting will revert back to the previous setting.

4. Freezer

Press "Freezer" to set freezer temperature between -14°C/ 6°F and -24°C /-12°F as needed, and the control panel will display corresponding value according to the following sequence.

-14°C — -15°C — -16°C — -17°C — -18°C — -19°C
-24°C — -23°C — -22°C — -21°C — -20°C

6°F — 5°F — 4°F — 3°F — 2°F — 1°F — 0°F — -1°F — -2°F — -3°F
-12°F — -11°F — -10°F — -9°F — -8°F — -7°F — -6°F — -5°F — -4°F

5. Super Freeze

Super Freeze can quickly lower frozen temperature and freeze your food faster than usual. This can lock the vitamins and nutrition of fresh food and keep your food fresh longer.

- Press "Super Freeze" button to activate the super freeze function. The light will come on and the freezer temperature setting displays -24°C/-12°F.
- In case of the maximum amount of food to be frozen, we recommend that you let the appliance operates for 6 hours first.
- Super freeze automatically switches off after 26 hours .
- When super freeze function is on you can switch off super freeze function by pressing "Super Freeze" or "Freezer" button and the freezer temperature setting will revert back to the previous setting.

6. Holiday

If you are going to be away for a long period of time such as a long holiday or business trip, you can activate this function by pressing “Holiday” button for 3 seconds until the light is illuminated.

- When the holiday function is activated, the temperature of the fridge is automatically switched to 15°C /59°F .The fridge temperature setting displays “-” and the freezer compartment remains on.

Important! Do not store any food in the fridge during this time, or they will soon go off.

- When the holiday function is on, you can switch off it by pressing any button of “Holiday”, “Fridge” and “Super Cool” button. The fridge temperature will revert back to it's previous setting.

7.Alarm

In case of alarm, “Alarm” icon will be on and there will be buzzing sound. Press “Alarm” button to clear alarm and then “Alarm” icon will turn off and stop buzzing.

Door Alarm

- When door of fridge or freezer is open for over 2 minutes, door alarm will come on. In case of door alarm, buzzer will sound 3 times per minute and stop 10 minutes later.

- To save energy, please avoid keeping doors open for a long time when using refrigerator. In case of door alarm, you can also clear door alarm by closing the doors.

Temperature alarm

- If freezer temperature is too high due to power failure or other reasons, temperature alarm is activated and the freezer temperature setting displays “--” .
- In case of temperature alarm, buzzer will sound constantly for 10 times.
- In case of temperature alarm, press “Alarm” button for 3 seconds to check the highest freezer temperature. The temperature value and “Alarm” icon will simultaneously flash for 5 seconds.

Caution! When refrigerator is powered on again, it is normal that temperature alarm is activated and you can press “Alarm” clear it.

Using your appliance

You appliance has the accessories as the “Description of the appliance " showed in general. With this part instruction you can have the right way to use them.

Door rack

- It is suitable for the storage of eggs, canned liquid, bottled drinks and packed food, etc. Do not place heavy things in the racks.
- The middle door shelf can be placed at different heights according to your requirements. Please take food out of the shelf before lifting vertically to reposition.

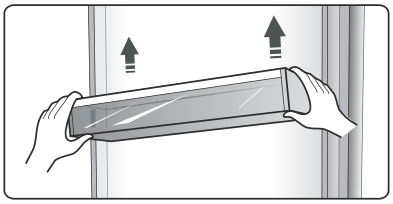

Bottle holder operation

The bottle holder is used to hold bottle. You can place it on the middle or lower door rack and slide to left or right as your prefer.

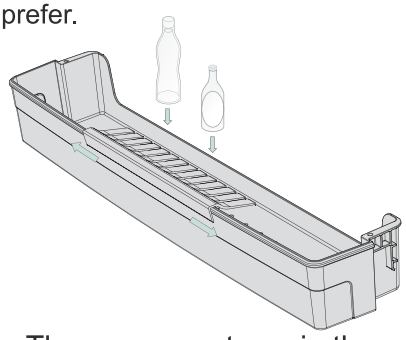

Note: There are egg trays in the upper shelf and bottle holder in the lower shelf.

Shelf in refrigerator chamber

The shelves in the refrigerator chamber, and they can be taken out to be cleaned.

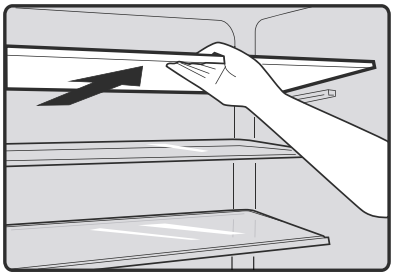

Crisper drawer and Humidity control

The crisper, mounted on telescopic extension slides, and is used for storing vegetables and fruits. You can adjust the humidity inside by using the sliding block.

- The sliding block on crisper cover can slide to left or right and the air hole become bigger or smaller relatively. Bigger air hole opening means less humidity and smaller means more humidity.
- We recommend that you store vegetables with more humidity and fruit less humidity.

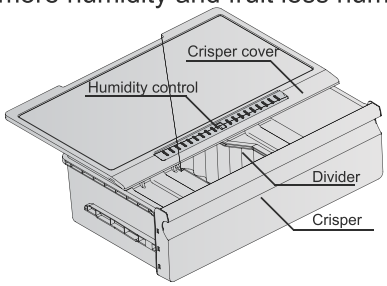

- To remove the crisper drawer , pull it forward, then lift the crisper off the slides. Remember to empty the crisper first. Once you have removed the drawers, ensure the slides are pushed back fully.
- Divider easily manage crisper space as you store separate food.

3. Using your freezer chamber

The freezer chamber is suitable for storage frozen food such as meat, ice cream and others.

Caution! Never close the freezer door while the drawers, installation bracket, ice tray, and/or telescopic slides are extended. It may damage both the parts and the refrigerator.

- Ensure that drink bottles are not left in the freezer as freezing liquid may cause the bottle to explode.

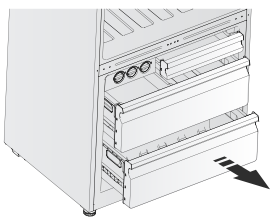

Installation bracket

The installation bracket is located under the top of the freezer chamber. In order to get more space in the freezer, you can remove the installation bracket.

- When removing the bracket, pull out the twistable ice tray and the upper freezer drawer, then lift both the two catches on the left and right underside, and pull it forward until the bracket breaks from the three circular attachments. Then you should bend it at one side, slip it from the guide and finish removing the bracket.

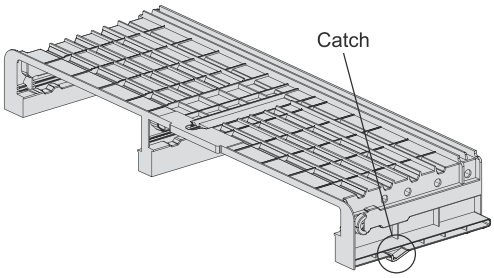

Twistable ice tray

The twistable ice tray is used to make and store ice cubes. You should use it as follows.

1.Pull out the twistable ice tray from the installation bracket.
2.Fill the drinking water inside (do not fill above the max water level).
3.Place the filled ice tray back to the bracket.
4.Wait for about 3 hours and twist the knobs clockwise and the ice will drop into the ice box below.

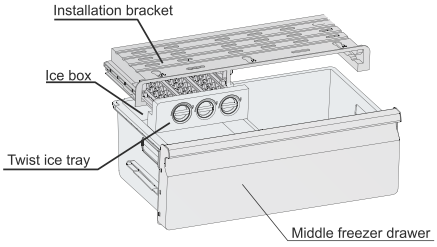

Drawers

The drawers, mounted on telescopic extension slides, is used to store more food. But the upper drawer is only for small food items.

- The method for removing the drawers is the same as the crisper in the refrigerator chamber.

Helpful hints and tips

Energy saving tips

We recommend that you follow the tips below to save energy.

- Try to avoid keeping the door open for long periods in order to conserve energy.
- Ensure the appliance is away from any sources of heat (direct sunlight, electric oven or cooker etc)
- Don't set the temperature colder than necessary.
- Don't store warm food or evaporating liquid in the appliance.
- Place the appliance in a well ventilated, humidity free room. Please refer to Installing your new appliance chapter.
- If the diagram shows the correct combination for the drawers, crisper and shelves, do not adjust the combination as this is designed to be the most energy efficient configuration.

Hints for fresh food refrigeration

- Do not place hot food directly into the refrigerator or freezer. The internal temperature will increase resulting in the compressor having to work harder and consuming more energy.
- Do cover or wrap the food, particularly if it has a strong flavor.
- Place food properly so that air can circulate freely around it.

Hints for refrigeration

- Meat (all types) wrapped in polythene food should be wrappde and place on the glass shelf.

above the vegetable drawer. Always follow food storage times and use by dates suggested by food manufacturers.

- Cooked food,cold dishes,etc should be covered and may be placed on any shelf.
- Fruit and vegetables should be stored in the vegetable crisper.
- Butter and cheese should be wrapped in airtight foil or plastic film wrap.
- Milk bottles should have a lid and be stored in the door racks.

Hints for freezing

- When first starting-up or after a period out of use, let the appliance run at least 2 hours on the higher settings before putting food in the compartment.
- Prepare food in small portions to enable it to be rapidly and completely frozen and thawed.
- Wrap up the food in aluminum foil or polyethylene food wraps which are airtight.
- Do not allow fresh, unfrozen food to touch the food which is already frozen to avoid temperature rise of the latter.
- Iced products, if consumed immediately after removal from the freezer compartment, will probably cause frost burns to the skin.
- It is recommended to label and date each frozen package in order to keep track of the storage time.

Hints for the storage of frozen food

- Ensure that frozen food has been stored correctly by the food retailer.
- Once defrosted, food will deteriorate rapidly and should not be re-frozen. Do not exceed the storage period indicated by the food manufacturer.

Switching off your appliance

If the appliance needs to be switched off for an extended period, the following steps should be taken prevent mould on the appliance.

1. Remove all food.
2. Remove the power plug from the mains socket.
3. Clean and dry the interior thoroughly.
4. Ensure that all the doors are wedged open slightly to allow air to circulate.

Cleaning and care

For hygienic reasons the appliance (including exterior and interior accessories) should be cleaned regularly at least every two months.
Caution! The appliance must not be connected to the main during cleaning to avoid potential electrical shock. Before cleaning, please switch off the appliance off and remove the plug from the main socket.

Exterior cleaning
To maintain good appearance of your appliance,you should clean it regularly.
-Wipe the digital panel and display panel with a clean, soft cloth.
-Spray water onto the cleaning cloth instead of spraying directly on the surface of the appliance. This helps ensure an even distribution of moisture to the surface.
-Clean the doors, handles and cabinet surfaces with a mild detergent and then wipe dry with a soft cloth.
Caution!
-Don't use sharp objects as they are likely to scratch the surface.
-Don't use Thinner, Car detergent, Clorox, ethereal oil, abrasive cleansers or organic solvent such as Benzene for cleaning. They may damage the surface of the appliance and may cause fire.
Interior cleaning
You should clean the appliance interior regularly. It will be easier to clean when food stocks are low. Wipe the inside of the fridge freezer with a weak solution of bicarbonate of soda, and then rinse with warm water using a wrung-out sponge or cloth. Wipe completely dry before putting the shelves and baskets back.
Thoroughly dry all surfaces and removable parts.
Although this appliance automatically defrosts, a layer of frost may occur on the freezer compartment's interior walls if the freezer door is opened frequently or kept open too long. If the frost is too thick, choose a time when the supply of food stocks are low and proceed as follows:
1.Remove existing food and accessories baskets, unplug the appliance from the mains power and leave the doors open. Ventilate the room thoroughly to accelerate the thawing process.
2. When defrosting is completed, clean your freezer as described above.
Caution! Don't use sharp objects to remove frost from the freezer compartment. Only after the interior is completely dry should the appliance be switched back on and plugged back into the mains socket.
Door seals cleaning
Take care to keep door seals clean. Sticky food and drinks can cause seals to stick to the cabinet and tear when you open the door. Wash seal with a mild detergent and warm water. Rinse and dry it thoroughly after cleaning.
Caution! Only after the door seals are completely dry should the appliance be powered on.
Replacing the LED light:
Warning! If the LED light is damaged, contact the customer helpline for assistance. To replace the LED light, the below steps can be followed:

1. Unplug your appliance.
2. Remove light cover by pushing up and out.
3. Hold the LED cover with one hand and pull it with the other hand while pressing the connector latch.
4. Replace LED light and snap it correctly in place.

Troubleshooting

If you experience a problem with your appliance or are concerned that the appliance is not functioning correctly, you can carry out some easy checks before calling for service, please see below.

Warning! Don't try to repair the appliance yourself. If the problem persists after you have made the checks mentioned below, contact a qualified electrician, authorized service engineer or the shop where you purchased the product.

Problem	Possible cause & Solution
Appliance is not working correctly	Check whether the power cord is plugged into the power outlet properly.
	Check the fuse or circuit of your power supply.Replace if necessary.
	The ambient temperature is either too low or too high. Please refer to page 5 for information regarding the required ambient temperature ranges.
	It is normal that the freezer is not operating during theautomatic defrost cycle, or for a short time after the appliance is switched on to protect the compressor.
Odours from the compartments	The interior may need to be cleaned
	Some food, containers or wrapping cause odours.
Noise from the appliance	The sounds below are quite normal: ●Compressor running noises. ●Air movement noise from the small fan motor in the freezer compartment or other compartments. ●Gurgling sound similar to water boiling. ●Popping noise during automatic defrosting. ●Clicking noise before the compressor starts.
	Other unusual noises are due to the reasons below and may need you to check and take action: ●The cabinet is not level. ●The back of appliance touches the wall. ●Bottles or containers fallen or rolling.
The motor runs continuously	It is normal to frequently hear the sound of the motor, it will need to run more when in following circumstances: ● Temperature setting is set colder than necessary. ● Large quantity of warm food has recently been stored in the appliance. ●The temperature outside the appliance is too high. ●Doors are kept open too long or too often. ●After your installing the appliance or it has been switched off for a long time.
A layer of frost occurs in the compartment	Check that the air outlets are not blocked by food and ensure food is placed within the appliance to allow sufficient ventilation.Ensure that door is fully closed.To remove the frosst and plerse refer to cleaning and care chapter.

Temperature inside is too warm	You may have left the doors open too long or too frequently; or the doors are kept open by some obstacle; or the appliance is located with insufficient clearance at the sides, back and top
Temperature inside is too cold	Increase the temperature by following the ″Display controls" chapter.
Doors cant be closed easily	Check whether the top of the refrigerator is tilted back by 10-15 mm (0.3-0.4") to allow the doors to self close, or if something inside is preventing the doors from closing.
Water drips on the floor	The water pan (located at the rear bottom of the cabinet) may not be properly leveled, or the draining spout (located underneath the top of the compressor depot) may not be properly positioned to direct water into this pan, or the water spout is blocked. You may need to pull the refrigerator away from the wall to check the pan and spout.
The light is not working	●The LED light may be damaged. Refer to replace LED lights in cleaning and care chapter. ●The control system has disabled the lights due to the door being kept open too long, close and reopens the door to reactivate the lights.

Disposalof the appliance

It is prohibited to dispose of this appliance as household waste.

Packaging materials

Packaging materials with the recycle symbol are recyclable. Dispose of the packaging into a suitable waste collection container to recycle it.

Before disposal of the appliance

1. Pull out the mains plug from the mains socket.
2. Cut off the power cord and discard with the mains plug

Warning! Refrigerators contain refrigerant and gases in the insulation. Refrigerant and gases must be disposed of professionally as they may cause eye injuries or ignition.

Ensure that tubing of the refrigerant circuit is not damage prior to proper disposal.

	Correct Disposal of this product
	This symbol on the product or in its packing indicates that this product may not be treated as household waste. Instead,it should be taken to the appropriate waste collection point for the recycling of electrical and electronic equipment. By ensuring this product is disposed of correctly, you will help prevent potential negative consequences for the environment and human health, which could otherwise be caused by the inappropriate waste handling of this product. For more detailed information about the recycling of this product, please contact your local council your household waste disposal service, or the shop where you purchased the product.