Gas and Electric Dryer

PRODUCT MODEL NUMBERS

WED8000D, WED8500D, WGD8000D, WGD8500D, WED8700E, WGD8700E, WED8510F

Side view

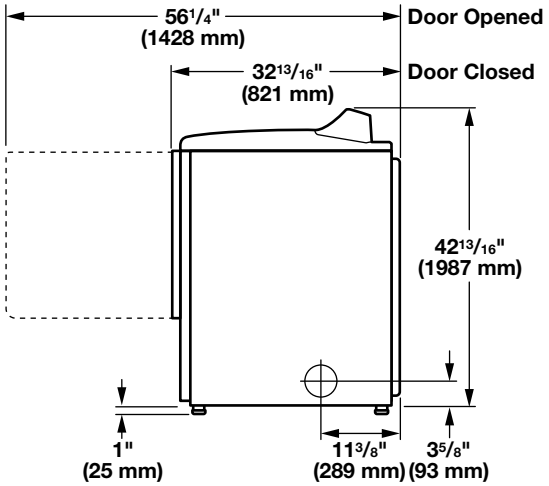

Back view

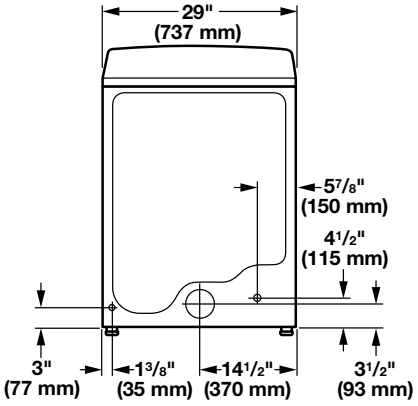

NOTE: Leveling legs 1" (25 mm) (3.6 washer capacity) or 1½" (38 mm) (3.8 washer capacity) depending model.

Bottom view

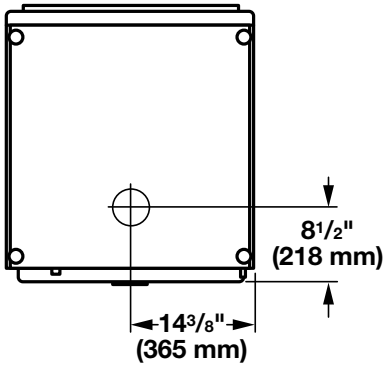

NOTE: Most installations require a minimum of 6" (152 mm) clearance behind dryer for exhaust vent with elbow. See "Venting Requirements."

Minimum Required Spacing

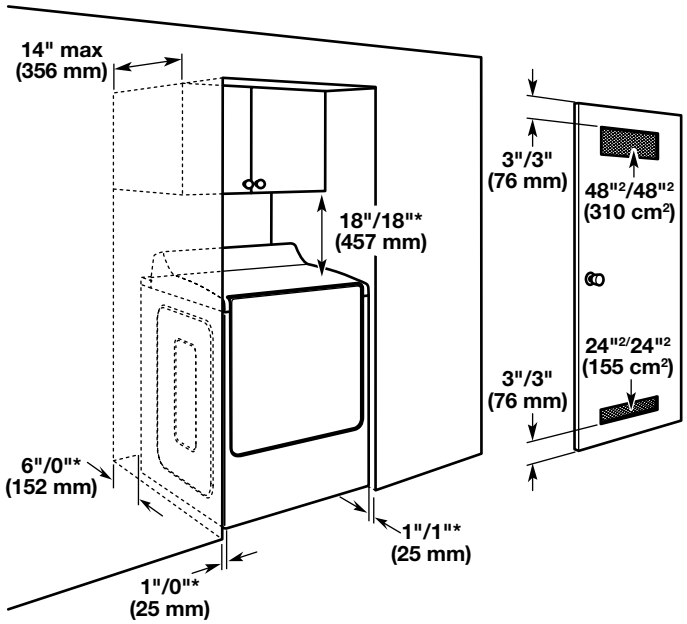

*Recommended/Minimum spacing

Spacing for recessed area or closet installation

The dimensions shown are for the recommended spacing allowed.

- Additional spacing should be considered for ease of installation and servicing.
- Additional clearances might be required for wall, door, and floor moldings.
- Additional spacing of 1" (25 mm) on all sides of the dryer is recommended to reduce noise transfer.
- For closet installation, with a door, minimum ventilation openings in the top and bottom of the door are required. Louvered doors with equivalent ventilitation openings are acceptable.
- Companion appliance spacing should also be considered.

W10725269C
03/2016

INSTALLATION REQUIREMENTS

GAS SUPPLY REQUIREMENTS

Gas supply: This dryer is equipped for use with Natural gas. Dryer can be converted to L.P. gas. When rigid pipe is used it should be ½" IPS. When acceptable to the gas supplier and local codes, ⅜" approved tubing may be used for lengths under 20 ft (6.1 m). For lengths over 20 ft (6.1 m), larger tubing should be used. Pipe-joint compounds resistant to the action of L.P. gas must be used. An individual manual shutoff valve must be installed within 6 ft (1.8 m) of the dryer in accordance with the National Fuel Gas Code ANSI Z223.1.

ELECTRICAL REQUIREMENTS - Gas models only

A 120-volt, 60 Hz, AC-only, 15 or 20 amp fused electrical supply is required. A time-delay fuse or circuit breaker and a separate circuit are recommended.

ELECTRICAL REQUIREMENTS - Electric models only

To supply the required 3 or 4 wire, single phase, 120/240 volt, 60 Hz., AC only electrical supply (or 3 or 4 wire, 120/208 volt electrical supply, if specified on the serial/rating plate) on a separate 30-amp circuit, fused on both sides of the line. A time-delay fuse or circuit breaker is recommended. Connect to an individual branch circuit.

WATER (STEAM MODELS ONLY) REQUIREMENTS

The dryer must be connected to the cold water faucet using new inlet hoses. Do not use old hoses. Do not overtighten. Damage to the coupling can result.

VENTING REQUIREMENTS

Exhaust venting: Exhaust your dryer to the outside. 4" (102 mm) diameter vent is required. Rigid or flexible metal exhaust vent must be used. Do not use plastic or metal foil vet. Exhaust hood must be at least 12" (305 mm) from the ground or any object that may be in the path of the exhaust.

Exhaust hoods:

Recommended Styles:

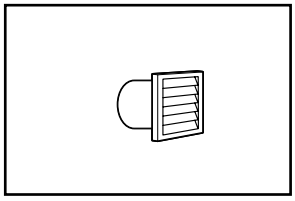

Louvered Hood

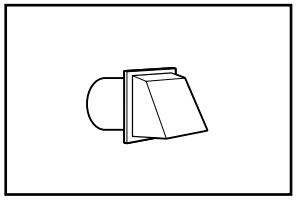

Box Hood

Acceptable Style:

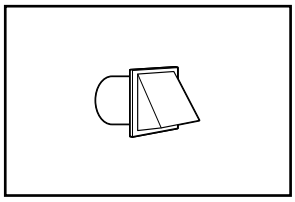

Angled Hood

Determine vent path:

- Select route that will provide straightest and most direct path outdoors.
- Plan installation to use fewest number of elbows and turns.
- When using elbows or making turns, allow as much room as possible.
- Bend vent gradually to avoid kinking.
- Use as few 90° turns as possible.

Determine vent length and elbows needed for best drying performance:

- Use following Vent System Chart to determine type of vent material and hood combinations acceptable to use.

  NOTE: Do not use vent runs longer than those specified in Vent System Chart. Exhaust systems longer than those specified will:

- Shorten life of dryer.
- Reduce performance, resulting in longer drying times and increased energy usage.

The Vent System Charts provide venting requirements that will help achieve best drying performance.

Vent System Chart

Number of 90° elbows	Type of vent	Angled hoods
0	Rigid metal	64 ft. (20 m)
1	Rigid metal	54 ft. (16.5 m)
2	Rigid metal	44 ft. (13.4 m)
3	Rigid metal	35 ft. (10.7 m)
4	Rigid metal	27 ft. (8.2 m)

NOTE: Bottom exhaust installations have a 90° turn inside the dryer. To determine maximum exhaust length, add one 90° turn to the charts.

Because Whirlpool Corporation policy includes a continuous commitment to improve our products, we reserve the right to change materials and specifications without notice.

Dimensions are for planning purposes only. For complete details, see Installation Instructions packed with product. Specifications subject to change without notice.