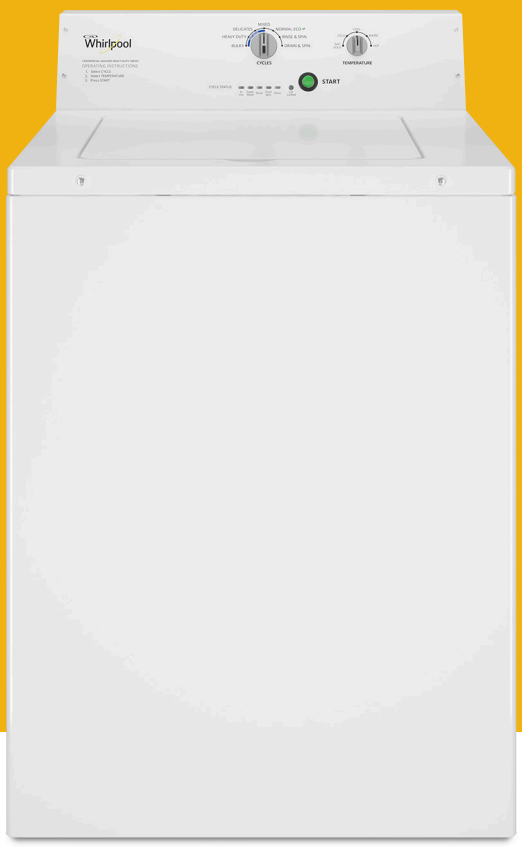

Whirlpool COMMERCIAL LAUNDRY

Commercial Top-Load Washer

With 100 years of experience in the industry and features that streamline service, Whirlpool® Commercial Laundry machines provide performance with the quality you expect.

Non-Coin

Commercial-Grade Features:

Choose a commercial-built product that withstands heavy traffic, regular use, and performs continuously.

Deep-Water Wash System

Provides optimal wash performance with deep-water wash and rinse cycle options and vigorous cleaning action.

Commercial-Grade Motor

The immensely powerful, ½-HP motor is designed to effectively deliver consistent, quality cleaning performance for any load—both the everyday and the extra-large.

Traditional Flex-Vane Agitator

Provides four distinct wash profiles—from aggressive to gentle—designed to pull clothes from the top to the bottom of the wash basket.

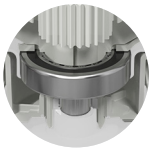

Premium Bearings

The high-quality bearings minimize friction as the machine runs, and are sealed for added longevity, helping to keep the machine running smoothly with every cycle.

Galvanized, Heavy-Gauge Cabinet

Built from thick-gauge, high-quality steel, this cabinet handles high-traffic and constant use while offering top-caliber protection to the internal components.

Full-Wrap Console

The metal console wraps completely around the back of the machine, making it easy to clean, and offering optimal protection against unexpected liquid spills or vapor.

CAE2795FQ—27" Commercial Washer

- 2.9-cu.-ft. Capacity
- 700-RPM Spin Speed
- Cycle Indicator LEDs
- Extra-Large Lid and Tub Opening
- 6" Inlet Hose and 4" Drain Hose Included
- 90-Day Labor/2-Year Limited Parts Only Warranty*

*See whirlpoolcommerciallaundry.com for complete warranty details.

Commercial Top-Load Washer

Non-Coin

Washer Specifications	
Model	CAE2795FQ
Motor Size—HP (kw)	1/2 (.37)
Modified Energy Factor (MEF)	8.5
Water Factor (WF)	1.6
Approximate Water Usage—Gallons (Liters)	
Average total water usage per cycle	24.65 (93.3)
Average hot water usage warm water cycle	0.53 (2)
Average hot water usage hot water cycle	6.51 (24.6)
Extract Speed—Max G-Force / Max RPM	144/700
Capacity	
Cylinder volume—cu. ft. (liters)	2.9 (82)
Cylinder diameter—in. (mm)	20.8 (528)
Cylinder depth—in. (mm)	23.8 (605)
Dimensions	
Width—in. (mm)	27 (686)
Depth—in. (mm)	26 (660)
Height—in. (mm)	42-1/2 (1,080)
Lid opening—in. (mm)	17 (432)
Crated Dimensions	
Width—in. (mm)	29 (737)
Depth—in. (mm)	27.5 (699)
Height—in. (mm)	49 (1,255)
Approximate Weight	
Uncrated—lbs. (kg)	145 (65.8)
Crated—lbs. (kg)	163 (73.9)
Electrical Requirements	
Electrical rating—voltage/HZ	120/60
Breaker/Fuse—amps	15
Water Inlet/Hose	
Operating pressure PSI (bar)	20–100 (1–8)
Inlet hose length—ft. (m)	6 (1.8)
Drain hose length—ft. (m)	4 (1.3)
Warranty	2-Year Limited

Dimensions are for planning purposes only. See specific instructions for proper installation. Because of continuous product improvement, Maytag reserves the right to change specifications without notice.

Front View

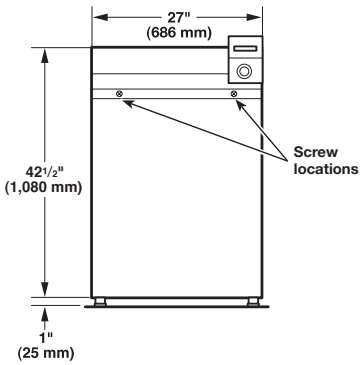

Side View

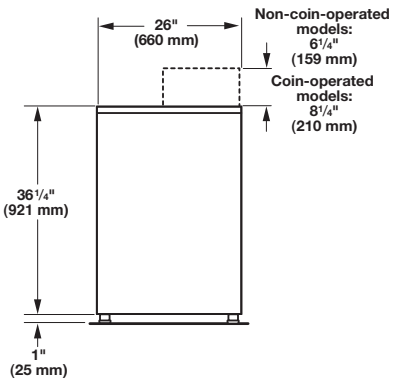

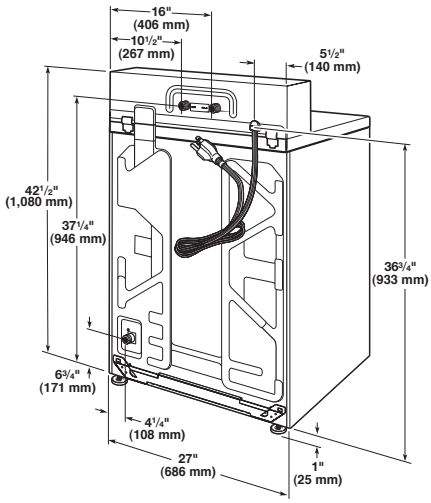

2-YEAR LIMITED PARTS ONLY WARRANTY

For the first two years from the date of purchase, when this major appliance is installed, maintained and operated according to the instructions attached to or furnished with the product, Whirlpool will pay for factory-specified replacement parts to correct defects in materials or workmanship that existed when this commercial appliance was purchased.

®/™ © 2017 Whirlpool. All rights reserved.
Whirlpool Corporation • Benton Harbor, Michigan 49022 U.S.A.

WY170055 4/17