WOLF®

DESIGN GUIDE

REVISED 7/2018

TABLE OF CONTENTS

3 BUILT-IN OVENS

42 MICROWAVE OVENS

58 WARMING DRAWERS

64 COOKTOPS | MODULES

90 COFFEE SYSTEMS | CUP WARMING DRAWERS

100 RANGES | RANGETOPS

124 OUTDOOR GRILLS | MODULES

132 COOKTOP VENTILATION

146 DOWNDRAFTS

154 PRO VENTILATION

166 WOLF WARRANTIES

Features and specifications are subject to change at any time without notice. Visit wolfappliance.com/specs for the most up-to-date information.

Throughout this guide, dimensions may vary by ± 1/8" (3). Dimensions in parentheses are millimeters unless otherwise specified.

10:27
WOLF

M Series Built-In Ovens

Four striking new looks are just the beginning. Contemporary M series ovens include stainless steel and black glass models. Superior performance features include a more advanced dual vertical convection fan system, touch-screen controls, convenient preset cooking programs, and improved interior lighting. There is more usable space inside for deliciousness on a grand scale. M series ovens can be installed in a standard or flush inset application.

M SERIES OVENS

TRANSITIONAL

SO30TM/S/TH

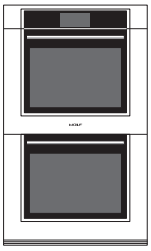

DO30TM/S/TH

PROFESSIONAL

SO30PM/S/PH

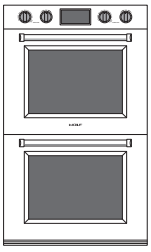

DO30PM/S/PH

CONTEMPORARY

SO30CM/S

SO30CM/B

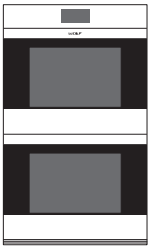

DO30CM/S

DO30CM/B

30" M Series Built-In Ovens

TRANSITIONAL SINGLE OVEN

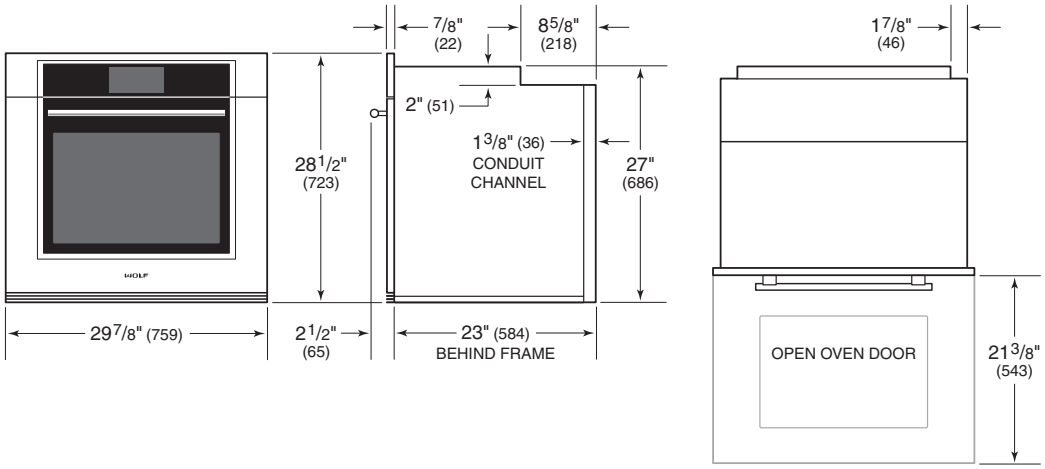

TRANSITIONAL DOUBLE OVEN

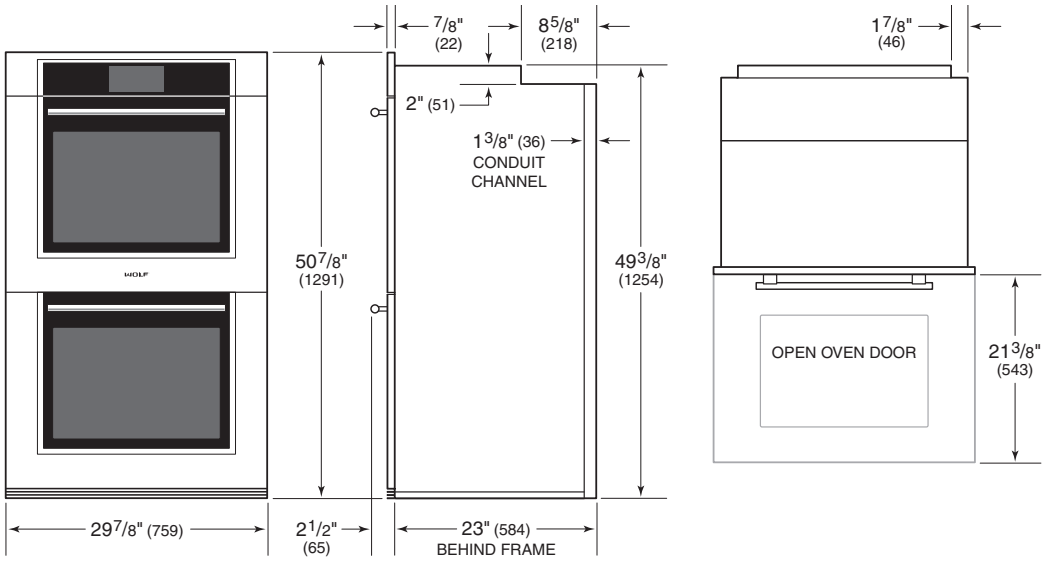

30" M Series Built-In Ovens

PROFESSIONAL SINGLE OVEN

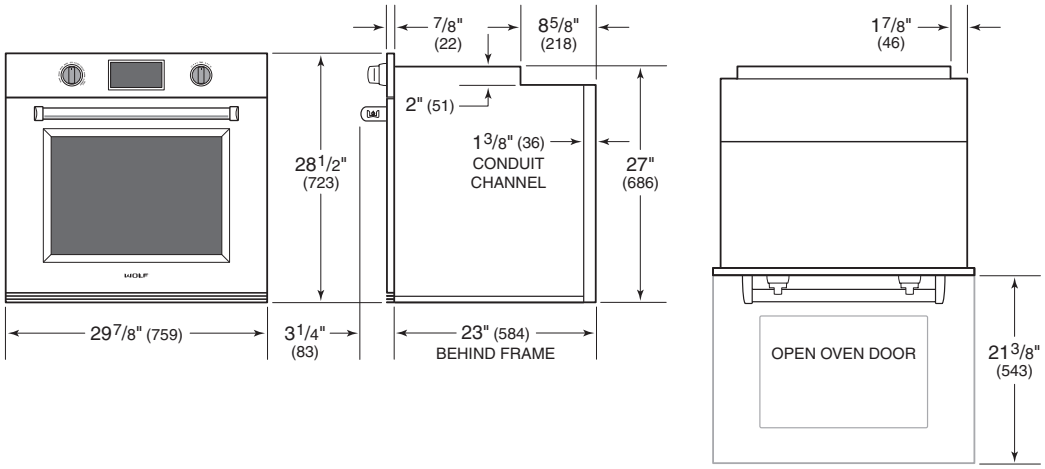

PROFESSIONAL DOUBLE OVEN

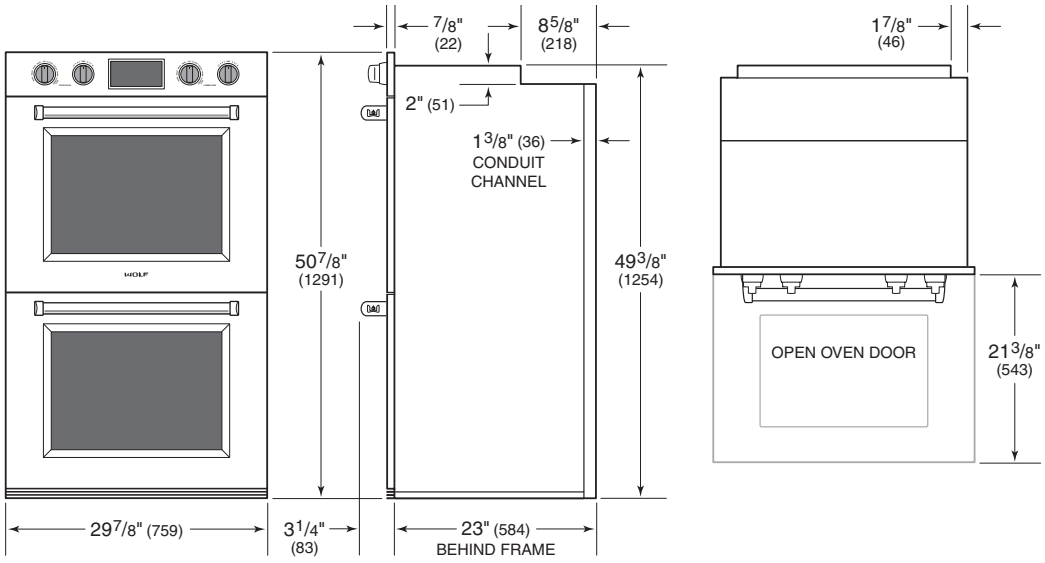

30" M Series Built-In Ovens

CONTEMPORARY STAINLESS STEEL SINGLE OVEN

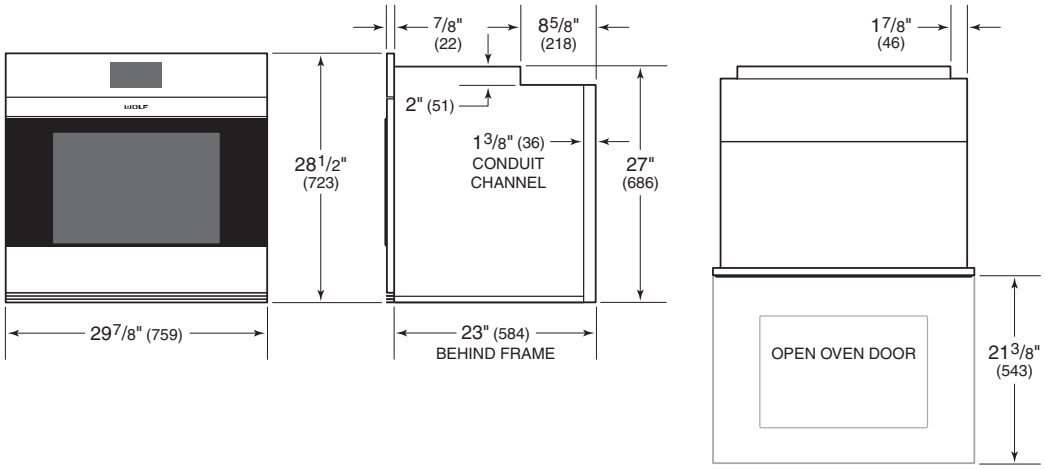

CONTEMPORARY STAINLESS STEEL DOUBLE OVEN

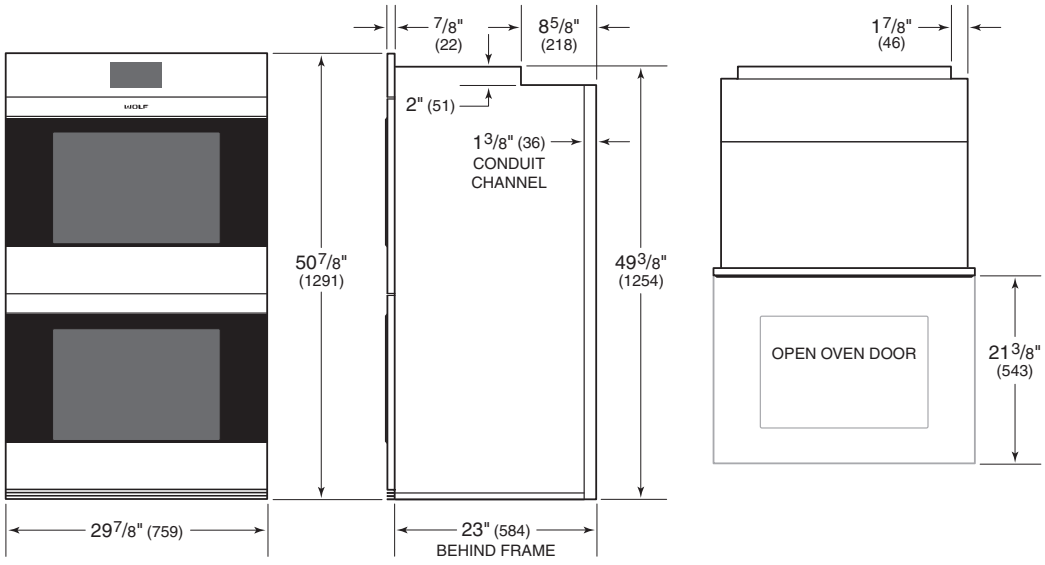

30" M Series Built-In Ovens

CONTEMPORARY BLACK GLASS SINGLE OVEN

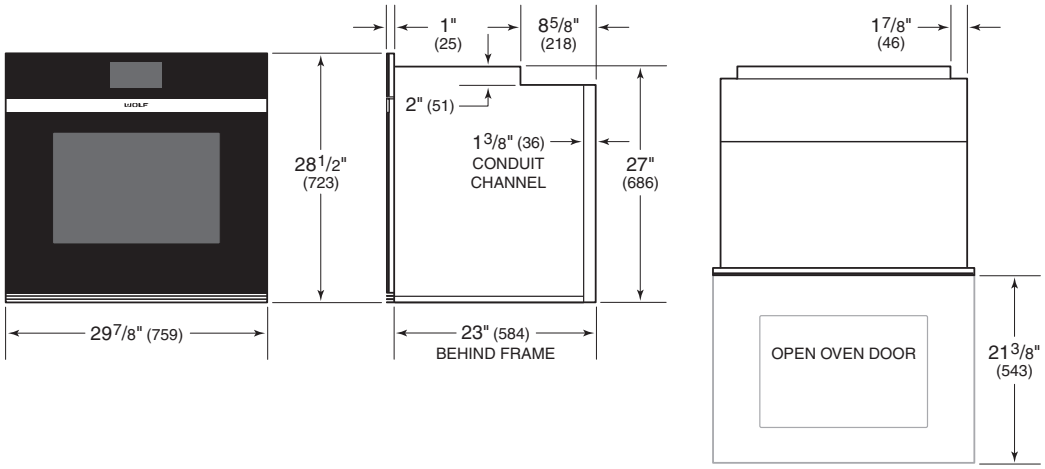

CONTEMPORARY BLACK GLASS DOUBLE OVEN

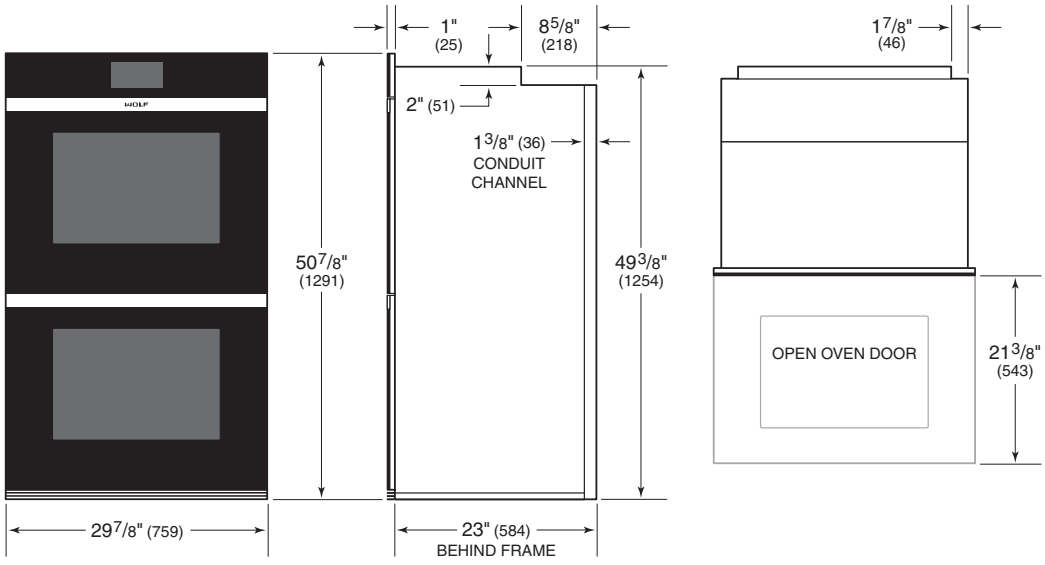

Planning Information

The M series oven can be installed in a standard or flush inset application. If a cooktop is being installed above an oven, a minimum of 1/4" (6) is required between the units. The location of the electrical supply within the oven opening may require additional cabinet depth.

Finish the edges of the opening. They may be visible when the door is open.

For standard installations, the face trim will overlap stiles and rails. Refer to the chart below.

For flush inset installations, a minimum 1/8" (3) reveal is required on all sides. To ensure consistent reveals, each corner of the opening must be exactly 90°.

INSTALLATION REQUIREMENTS

BASE SUPPORT	MIN
Single Oven	250 lb (115 kg)
Double Oven	400 lb (181 kg)
TRIM OVERLAP	
Top	1" (25)
Bottom	0" (0)
Sides	11/16" (18)

DUAL INSTALLATION

Two 30" single M series ovens can be installed side by side in a standard or flush inset application. A dual installation kit is required. To maintain appropriate airflow, the ovens must be installed into one opening. Any cosmetic or structural material placed between the ovens will impede airflow and is not recommended. Refer to the illustrations on pages 14–15.

The dual installation kit is available through an authorized Wolf dealer. For local dealer information, visit the find a showroom section of our website, wolfappliance.com.

ELECTRICAL REQUIREMENTS

Installation must comply with all applicable electrical codes.

Locate the electrical supply flush with the back wall and within the shaded area shown in the illustrations on the following pages. For ease of installation, the electrical supply for the oven can be placed in an adjacent cabinet within reach of the conduit.

Performance may be compromised if the electrical supply is less than 240 volts.

The oven is supplied with a conduit consisting of two insulated hot lead conductors and a bare ground conductor. The wiring diagram covering the control circuit is provided with the oven.

ELECTRICAL REQUIREMENTS—SINGLE OVEN

Electrical Supply	grounded, 240/208 VAC, 60 Hz
Service	30 amp dedicated circuit
Conduit	4' (1.2 m)
Total Amps	22
Max Connected Load	5.4 kW

ELECTRICAL REQUIREMENTS—DOUBLE OVEN

Electrical Supply	grounded, 240/208 VAC, 60 Hz
Service	50 amp dedicated circuit
Conduit	5' (1.5 m)
Total Amps	45
Max Connected Load	10.8 kW

30" M Series Single Oven

STANDARD INSTALLATION

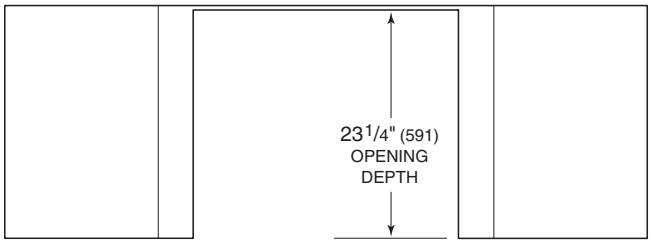

TOP VIEW

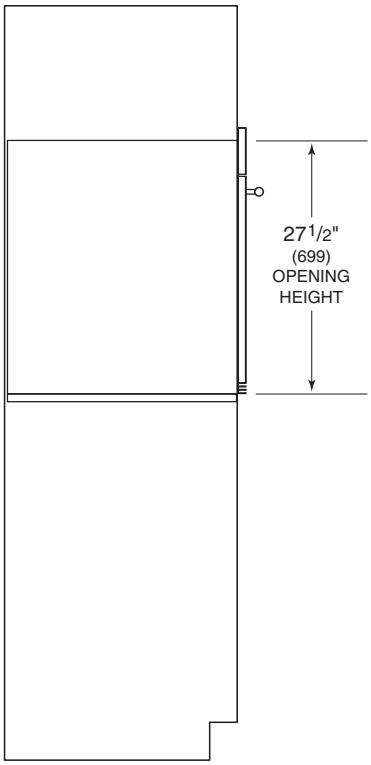

SIDE VIEW

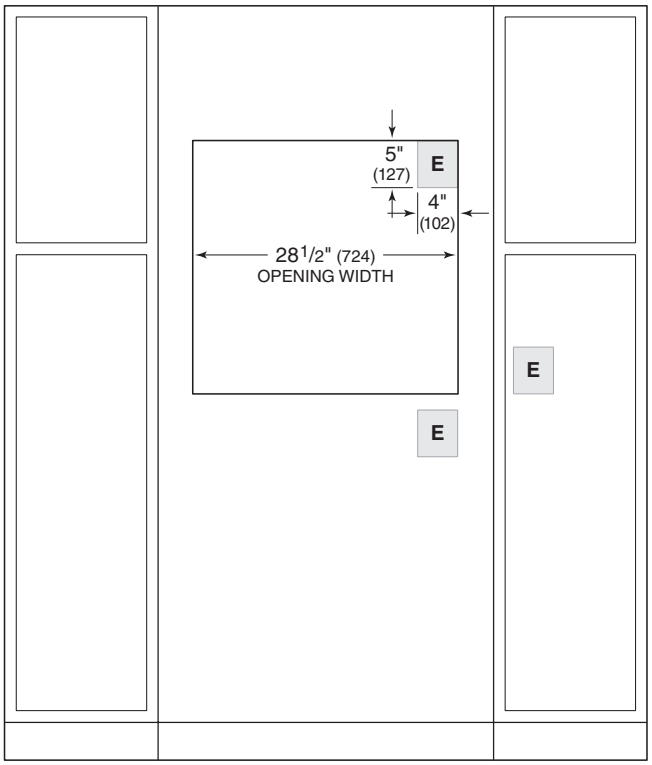

FRONT VIEW

NOTE: Location of electrical supply within opening may require additional cabinet depth.

30" M Series Single Oven

FLUSH INSET INSTALLATION

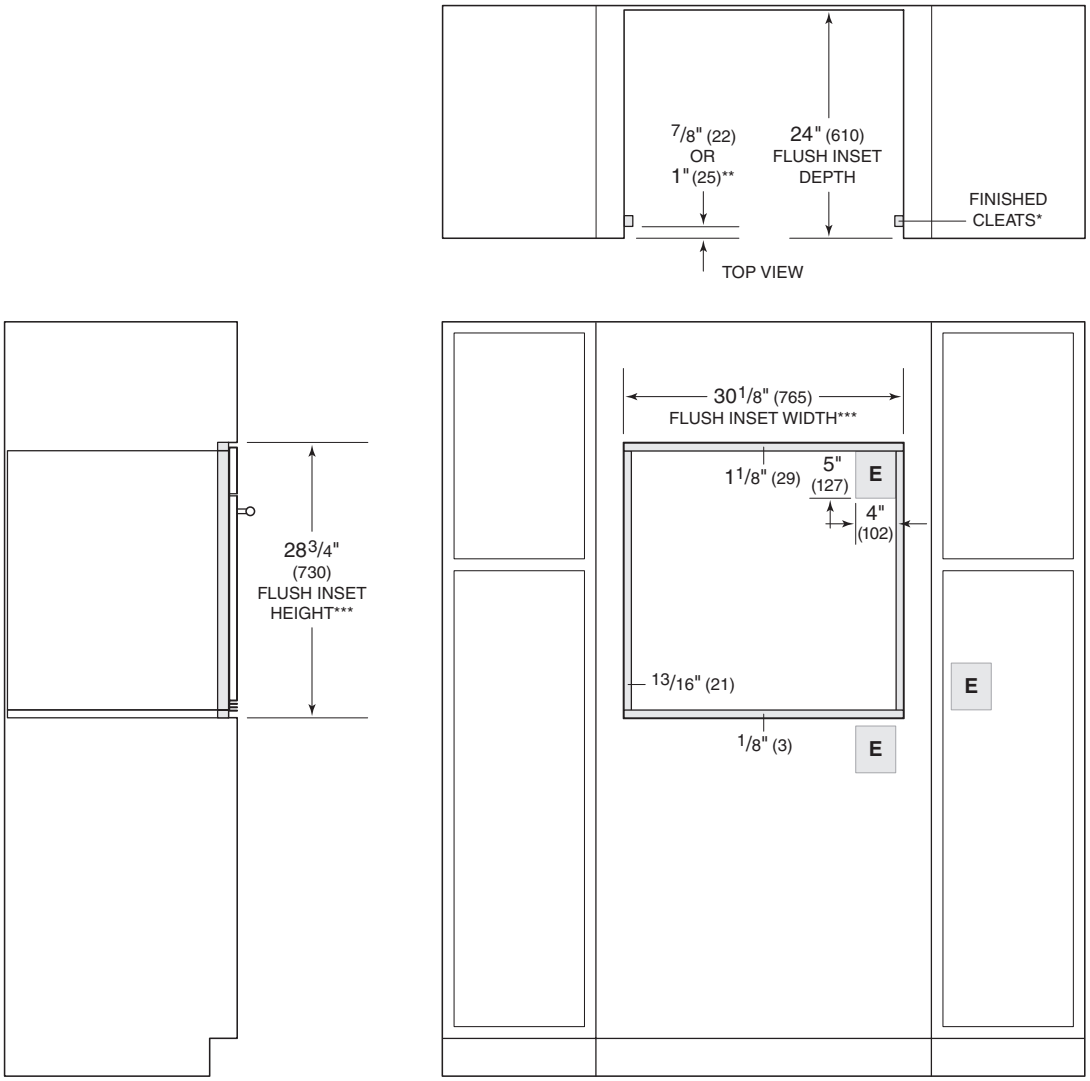

**1" (25) minimum depth. Shaded areas will be visible and should be finished to match cabinetry.*
***7/8" (22) for transitional, professional and contemporary stainless steel models and 1" (25) for contemporary black glass model.*
****Dimension provides minimum reveals.*

NOTE: Location of electrical supply within opening may require additional cabinet depth.

30" M Series Double Oven

STANDARD INSTALLATION

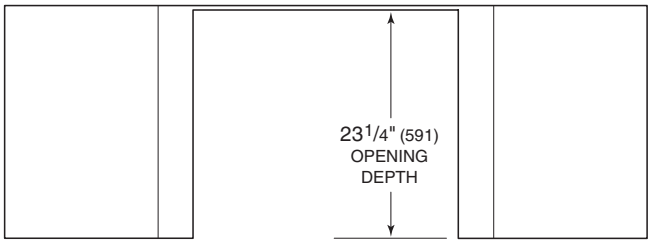

TOP VIEW

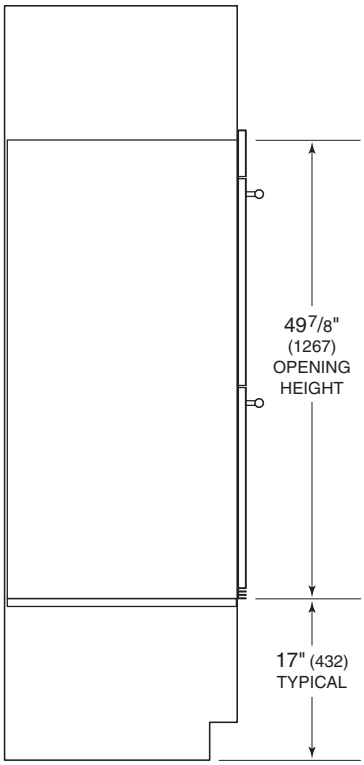

SIDE VIEW

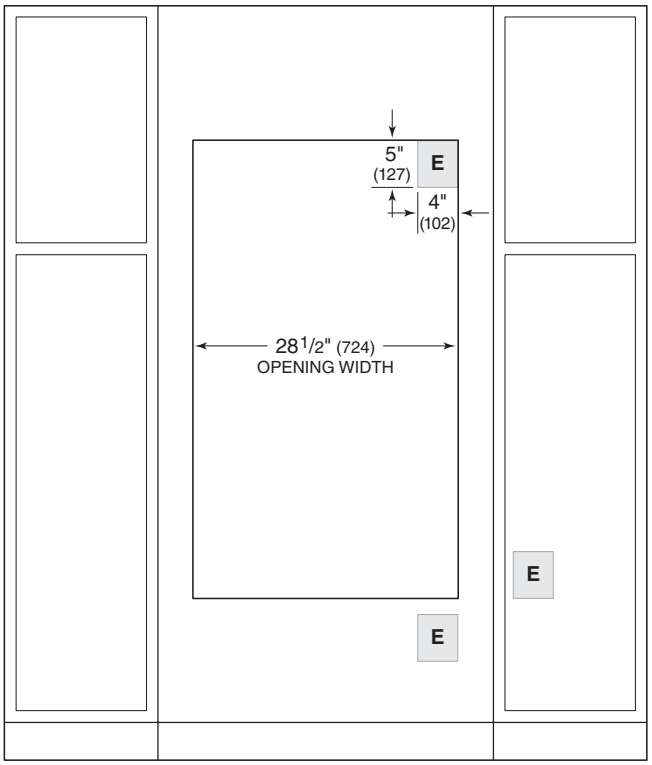

FRONT VIEW

NOTE: Location of electrical supply within opening may require additional cabinet depth.

30" M Series Double Oven

FLUSH INSET INSTALLATION

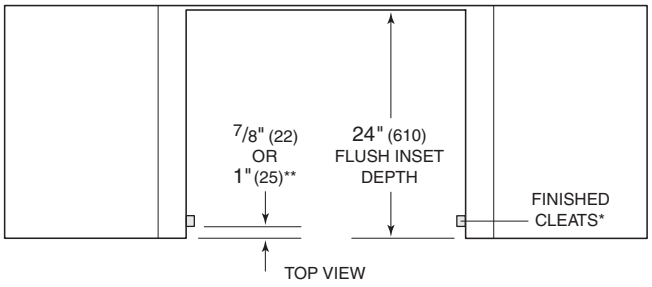

TOP VIEW

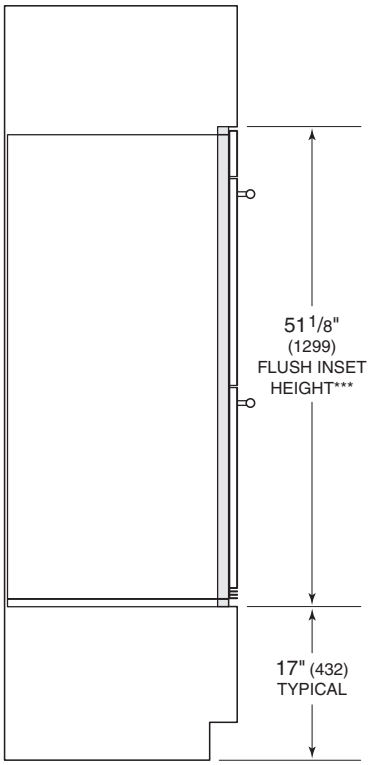

SIDE VIEW

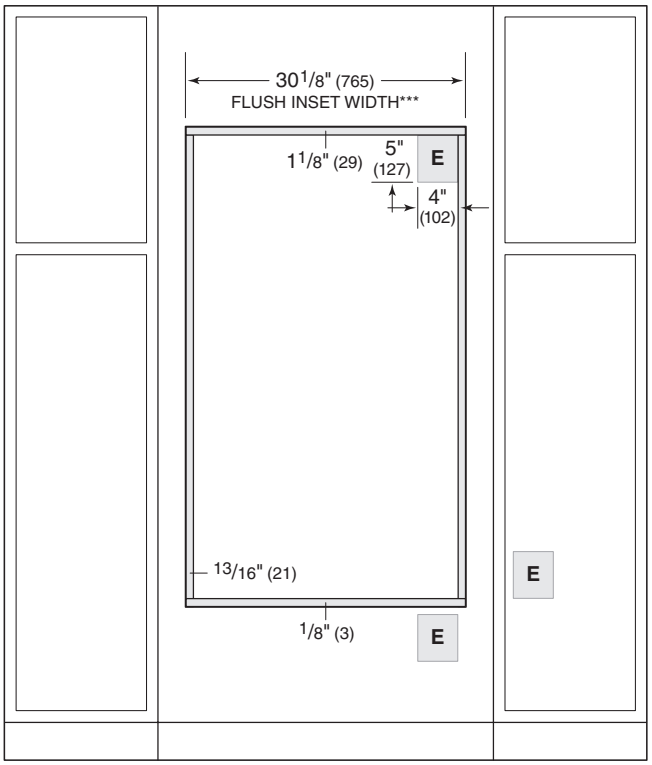

FRONT VIEW

**1" (25) minimum depth. Shaded areas will be visible and should be finished to match cabinetry.*
***7/8" (22) for transitional, professional and contemporary stainless steel models and 1" (25) for contemporary black glass model.*
****Dimension provides minimum reveals.*

NOTE: Location of electrical supply within opening may require additional cabinet depth.

30" M Series Single Oven

DUAL STANDARD INSTALLATION

TOP VIEW

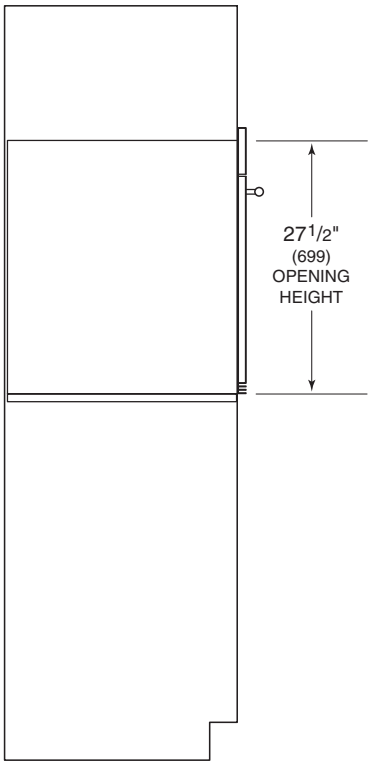

SIDE VIEW

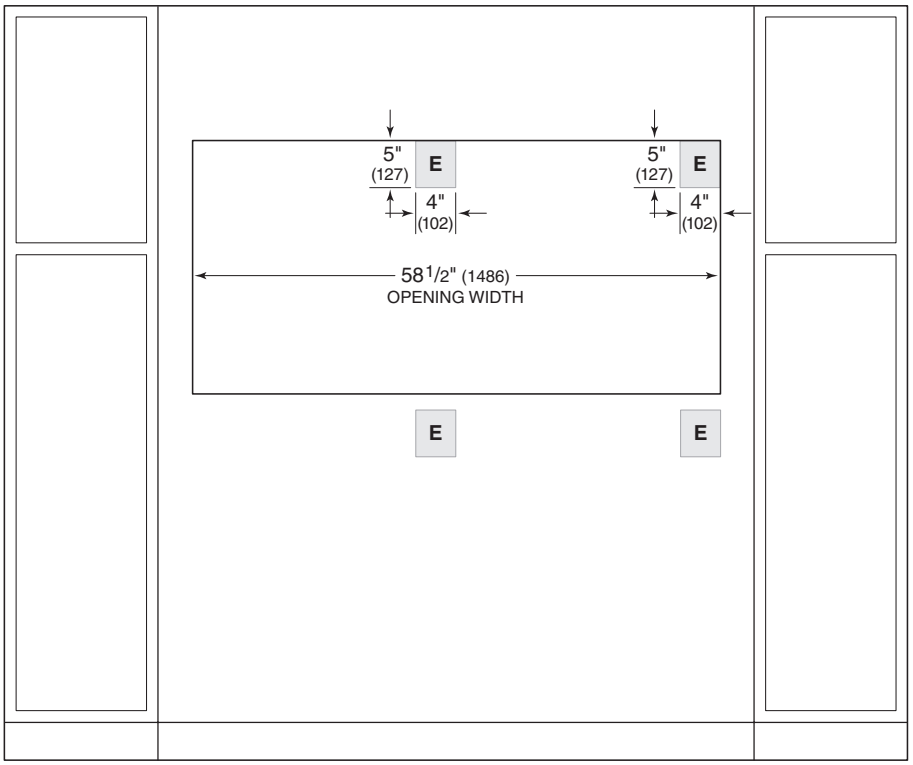

FRONT VIEW

NOTE: Location of electrical supply within opening may require additional cabinet depth. A dual installation kit is required for this installation.

30" M Series Single Oven

DUAL FLUSH INSET INSTALLATION

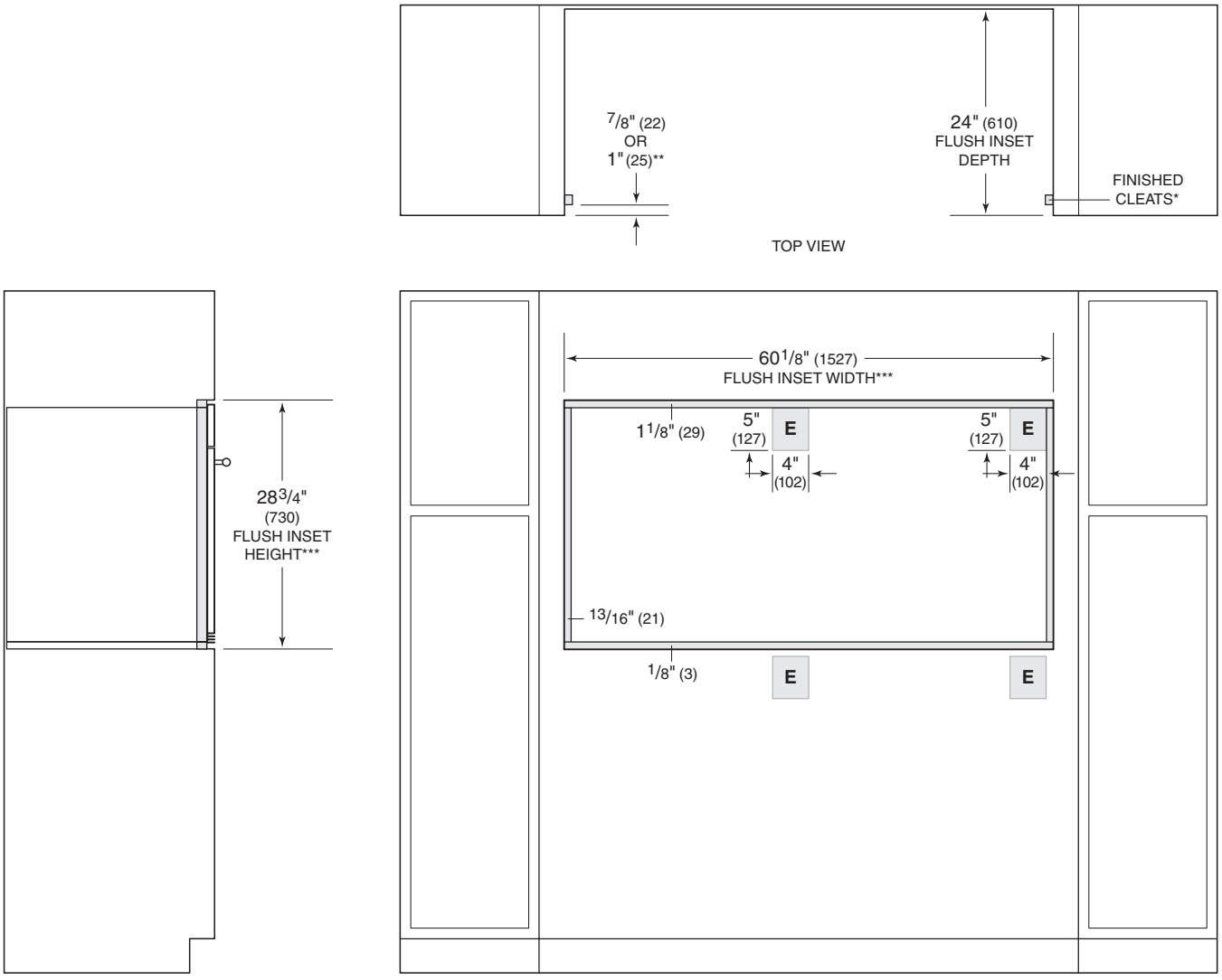

1" (25) minimum depth. Shaded areas will be visible and should be finished to match cabinetry.
***7/8" (22) for transitional, professional and contemporary stainless steel models and 1" (25) for contemporary black glass model.*
****Dimension provides minimum reveals.*

NOTE: Location of electrical supply within opening may require additional cabinet depth. A dual installation kit is required for this installation.

435
WOLF

E Series Built-In Ovens

Wolf E series ovens are crafted of stainless steel. The handles match the rest of the new Wolf cooking appliance offering, providing a more cohesive look. E series ovens can be installed in a standard or flush inset application.

E SERIES OVENS

TRANSITIONAL

SO24TE/S/TH

SO30TE/S/TH

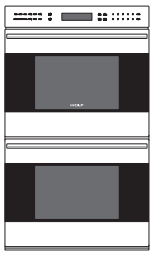

DO30TE/S/TH

PROFESSIONAL

SO30PE/S/PH

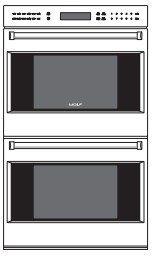

DO30PE/S/PH

CONTEMPORARY

SO30CE/B/TH

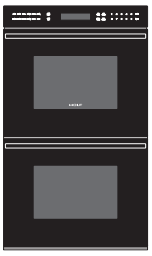

DO30CE/B/TH

24" E Series Built-In Oven

TRANSITIONAL SINGLE OVEN

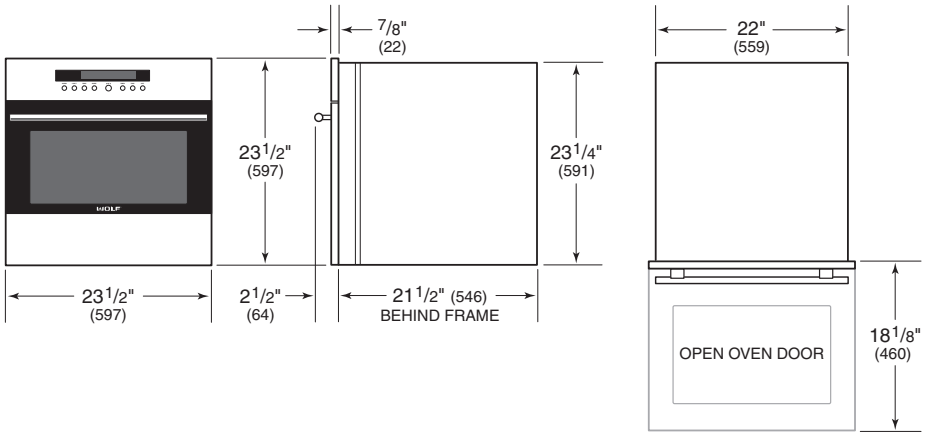

30" E Series Built-In Ovens

TRANSITIONAL SINGLE OVEN

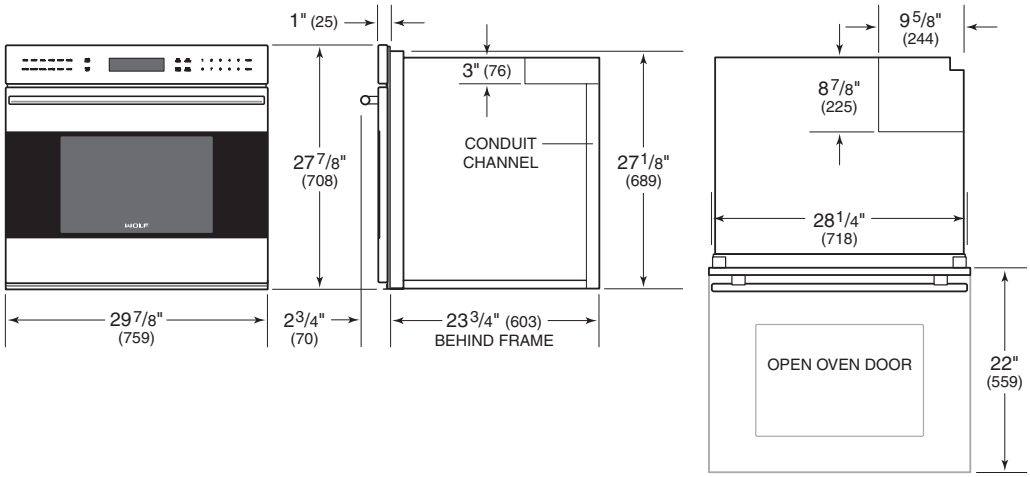

TRANSITIONAL DOUBLE OVEN

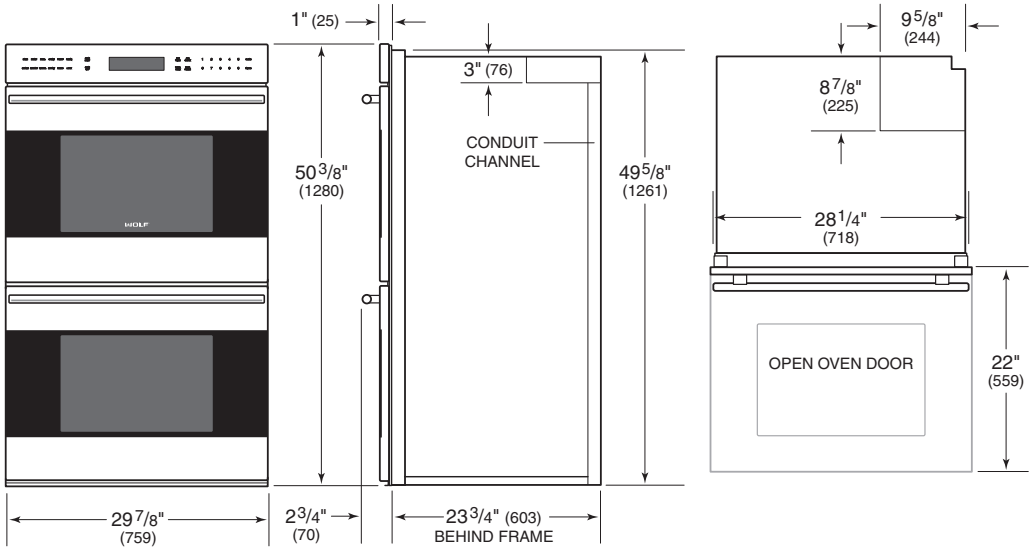

30" E Series Built-In Ovens

PROFESSIONAL SINGLE OVEN

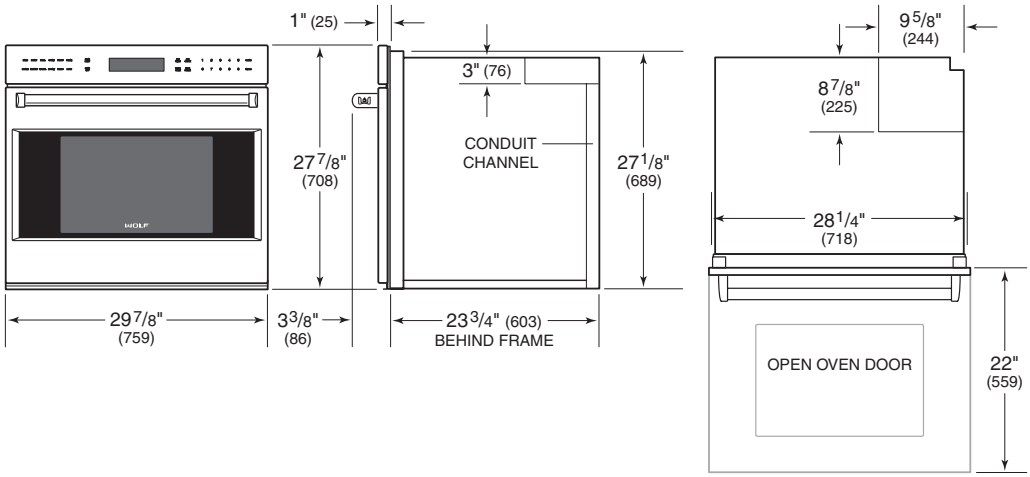

PROFESSIONAL DOUBLE OVEN

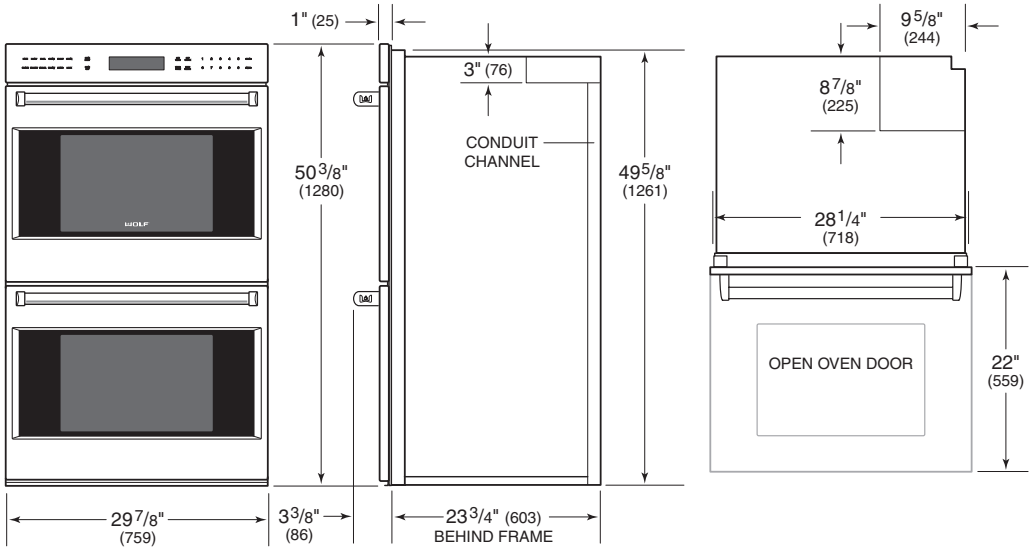

30" E Series Built-In Ovens

CONTEMPORARY SINGLE OVEN

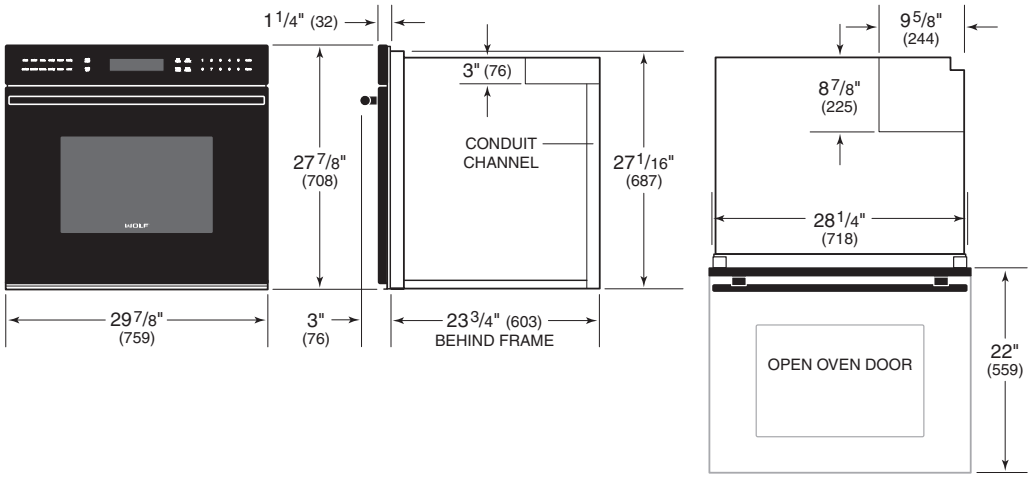

CONTEMPORARY DOUBLE OVEN

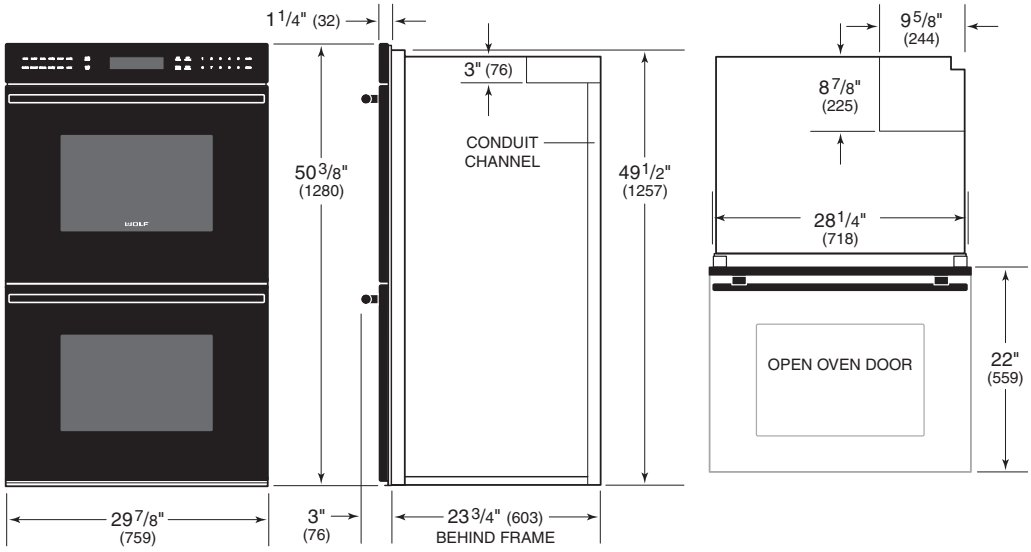

Planning Information

E series ovens can be installed in a standard or flush inset application. If a cooktop is being installed above an oven, a minimum of 1/4" (6) is required between the units. The location of the electrical supply within the oven opening may require additional cabinet depth.

Finish the edges of the opening. They may be visible when the door is open.

For standard installations, the face trim will overlap stiles and rails. Refer to the chart below.

For flush inset installations, a minimum reveal is required on all sides. Refer to the chart below. To ensure consistent reveals, each corner of the opening must be exactly 90°.

INSTALLATION REQUIREMENTS

BASE SUPPORT		MIN
24" Oven		150 lb (68 kg)
30" Single Oven		250 lb (113 kg)
30" Double Oven		400 lb (181 kg)
TRIM OVERLAP	**24" OVEN**	**30" OVEN**
Top	1/4" (6)	1/2" (13)
Bottom	0" (0)	1/8" (3)
Sides	11/16" (17)	11/16" (17)
REVEAL		**MIN**
24" Oven		1/8" (3)
30" Oven		1/4" (6)

ELECTRICAL REQUIREMENTS—24" OVEN

Installation must comply with all applicable electrical codes.

Locate the electrical supply as shown in the illustrations on the following pages. A separate circuit servicing only this appliance is required. A ground fault circuit interrupter (GFCI) is not recommended and may cause interruption of operation. Refer to the illustration below for minimum power cord plug clearance.

Performance may be compromised if the electrical supply is less than 240 volts.

ELECTRICAL REQUIREMENTS—24" OVEN

Electrical Supply	grounded, 240/208 VAC, 60 Hz
Service	20 amp dedicated circuit
Receptacle	NEMA 6-20R grounding-type
Power Cord	6' (1.8 m)

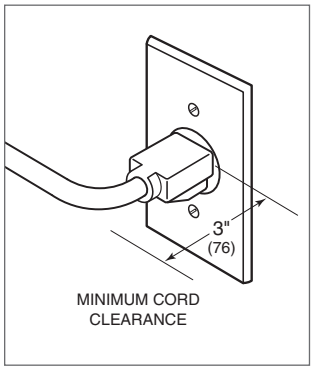

Power cord clearance

Planning Information

ELECTRICAL REQUIREMENTS—30" OVEN

Installation must comply with all applicable electrical codes.

Locate the electrical supply flush with the back wall and within the shaded area shown in the illustrations on the following pages. For ease of installation, the electrical supply for the oven can be placed in an adjacent cabinet within reach of the conduit.

Performance may be compromised if the electrical supply is less than 240 volts.

The oven is supplied with a conduit consisting of two insulated hot lead conductors and a bare ground conductor. The wiring diagram covering the control circuit is provided with the oven.

ELECTRICAL REQUIREMENTS—30" SINGLE OVEN

Electrical Supply	grounded, 240/208 VAC, 60 Hz
Service	30 amp dedicated circuit
Conduit	4' (1.2 m)
Total Amps	21
Max Connected Load	5.1 kW

ELECTRICAL REQUIREMENTS—30" DOUBLE OVEN

Electrical Supply	grounded, 240/208 VAC, 60 Hz
Service	50 amp dedicated circuit
Conduit	5' (1.5 m)
Total Amps	37
Max Connected Load	8.9 kW

24" E Series Single Oven

STANDARD INSTALLATION

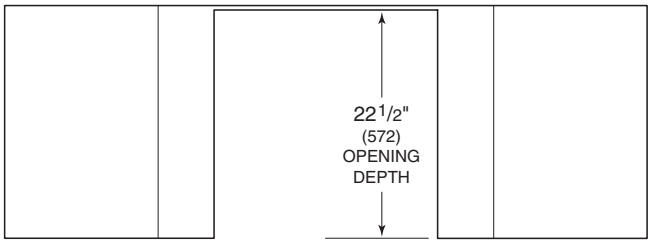

TOP VIEW

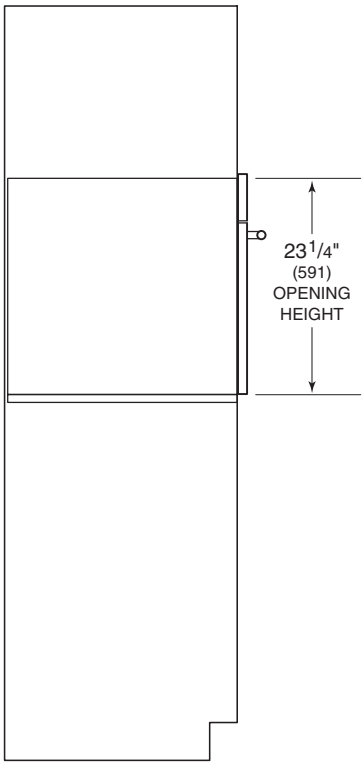

SIDE VIEW

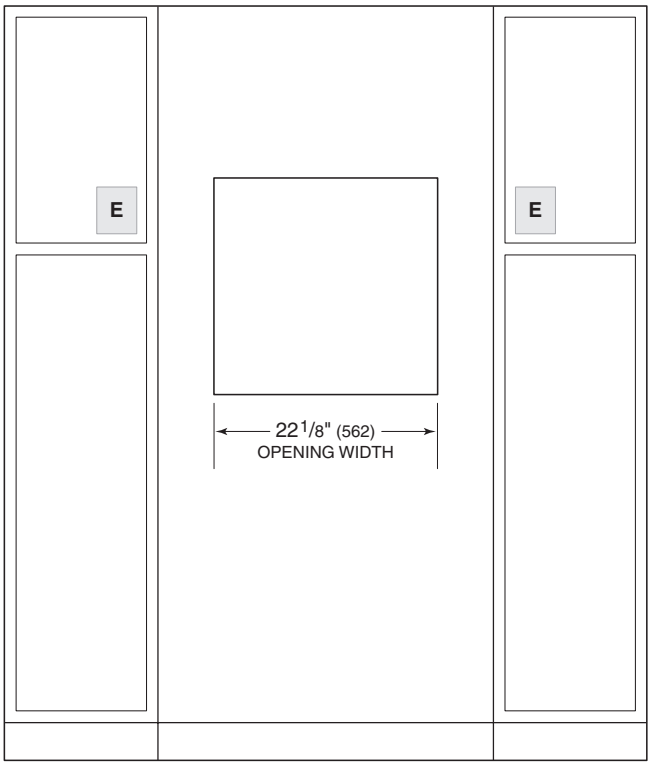

FRONT VIEW

NOTE: Electrical supply must be located in adjacent cabinet within 3' (.9 m) of opening.

24" E Series Single Oven

FLUSH INSET INSTALLATION

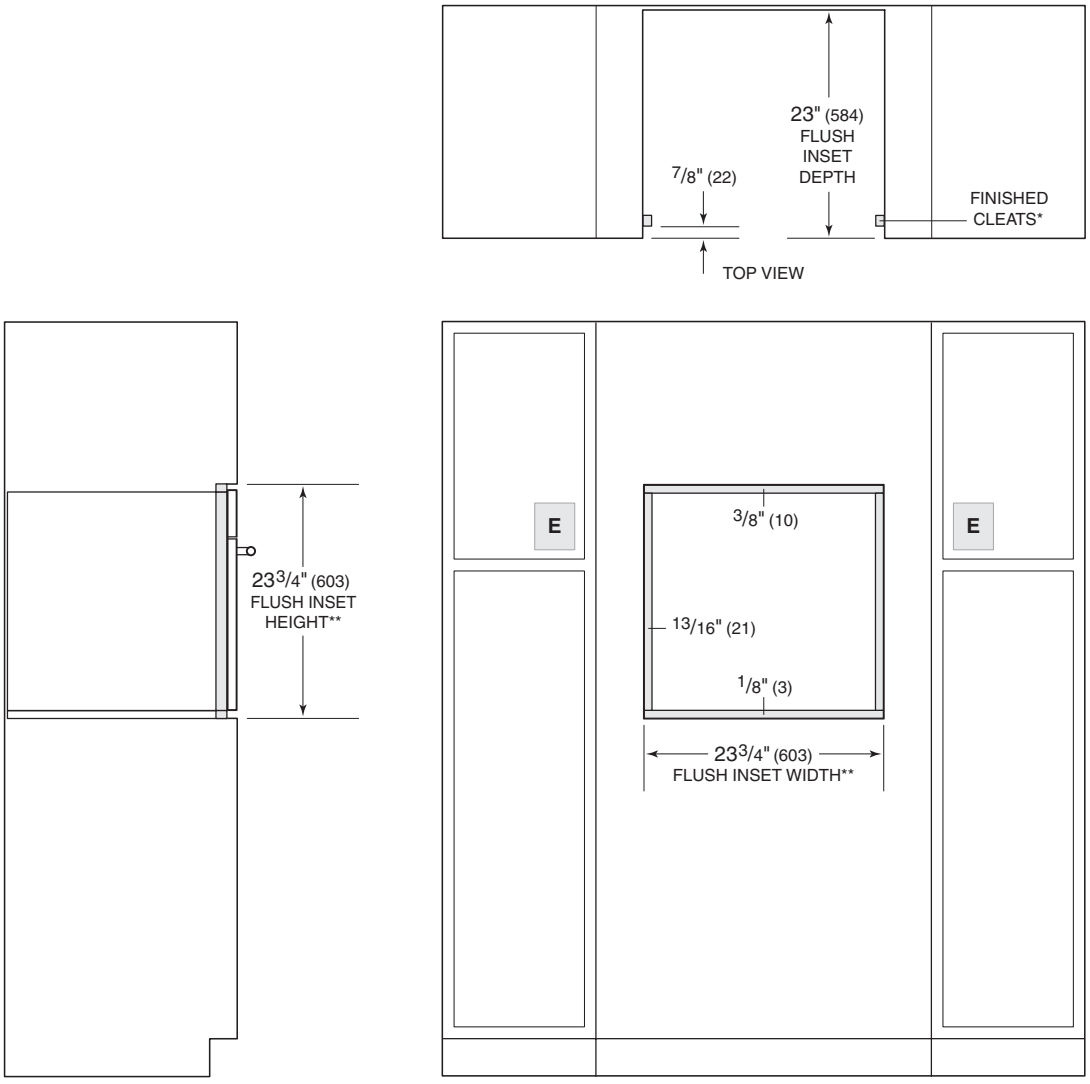

**Will be visible and should be finished to match cabinetry.*
***Dimension provides minimum reveals.*

NOTE: Electrical supply must be located in adjacent cabinet within 3' (.9 m) of opening.

30" E Series Single Oven

STANDARD INSTALLATION

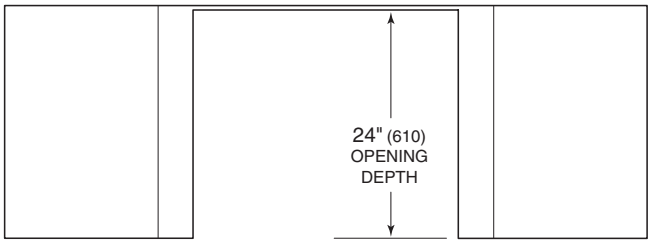

TOP VIEW

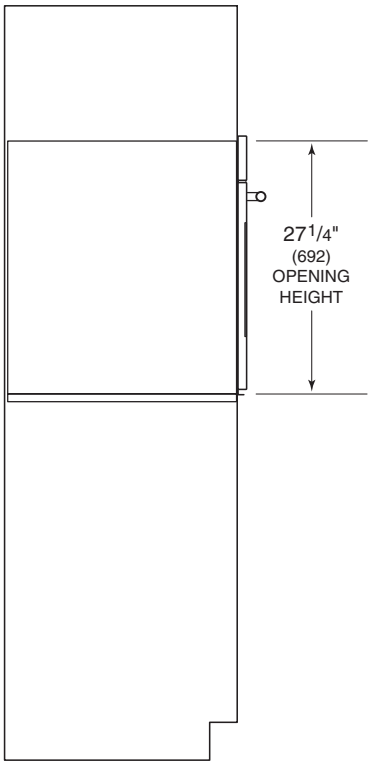

SIDE VIEW

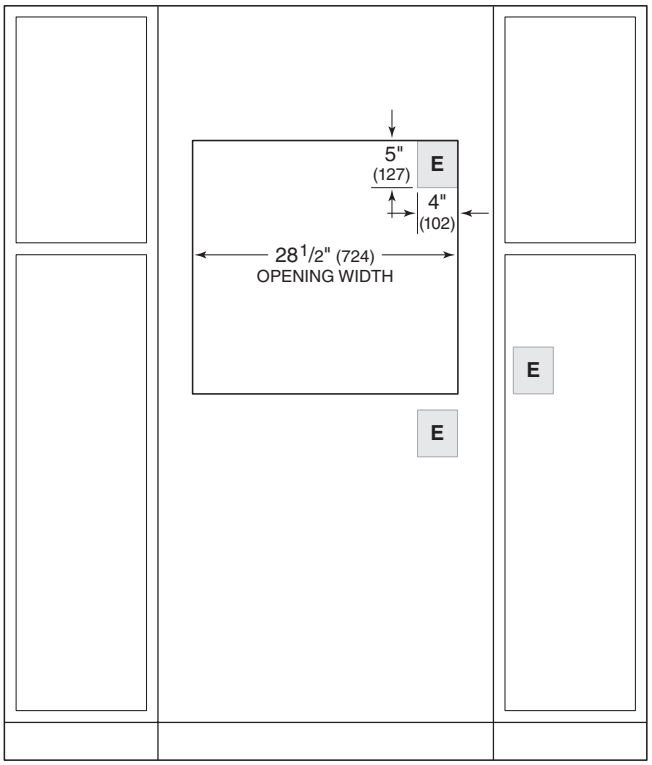

FRONT VIEW

NOTE: Location of electrical supply within opening may require additional cabinet depth.

30" E Series Single Oven

FLUSH INSET INSTALLATION

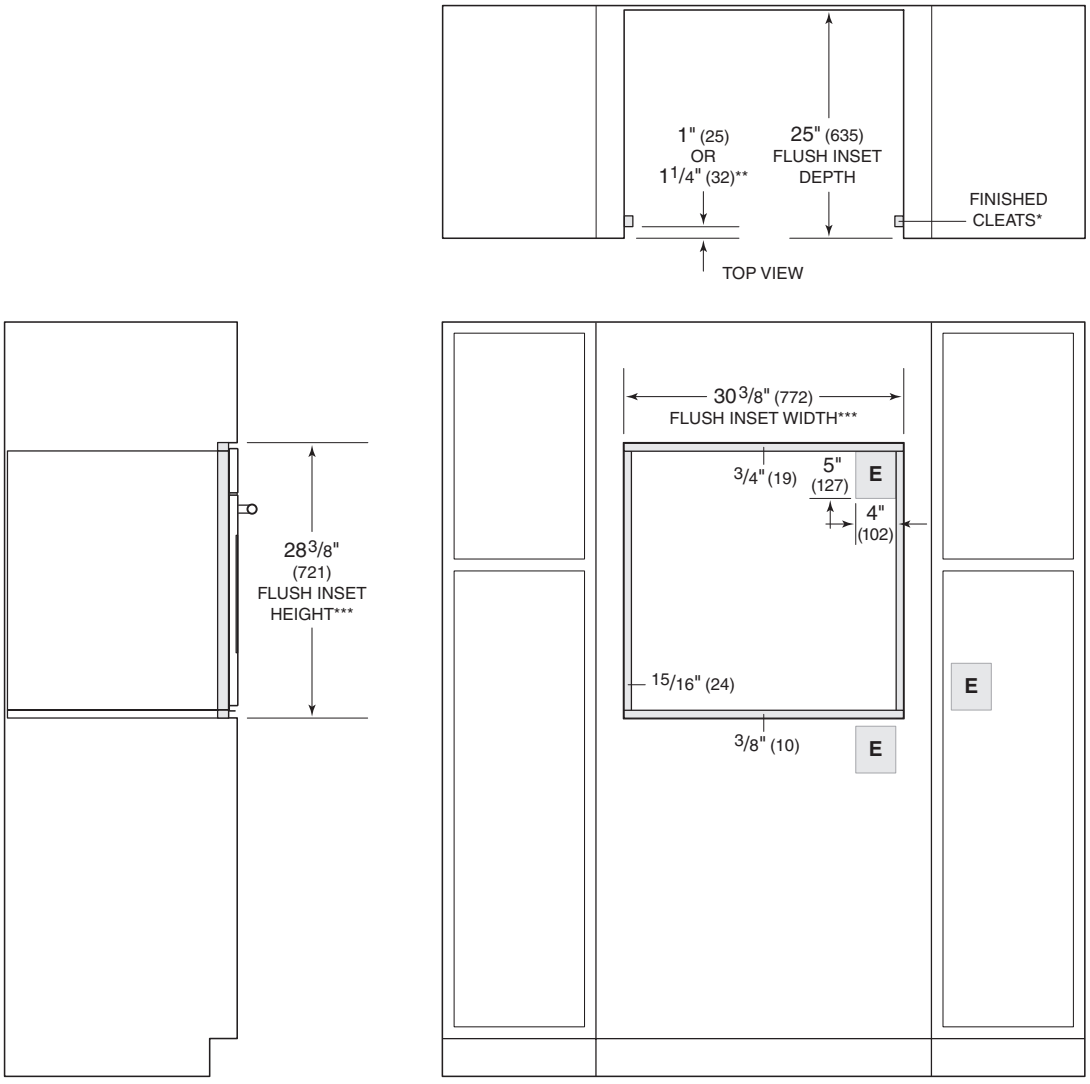

*Will be visible and should be finished to match cabinetry.
**1" (25) for professional and transitional models and 1 1/4" (32) for contemporary model.
***Dimension provides minimum reveals.

NOTE: Location of electrical supply within opening may require additional cabinet depth.

30" E Series Double Oven

STANDARD INSTALLATION

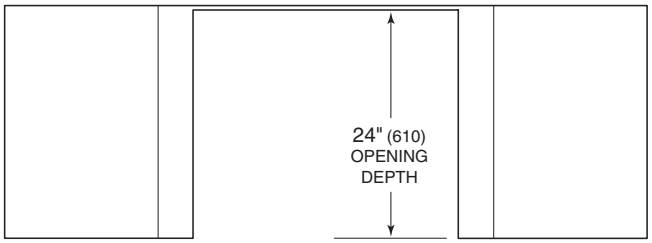

TOP VIEW

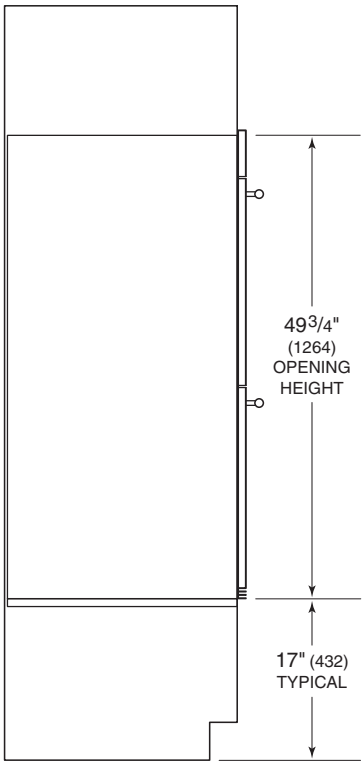

SIDE VIEW

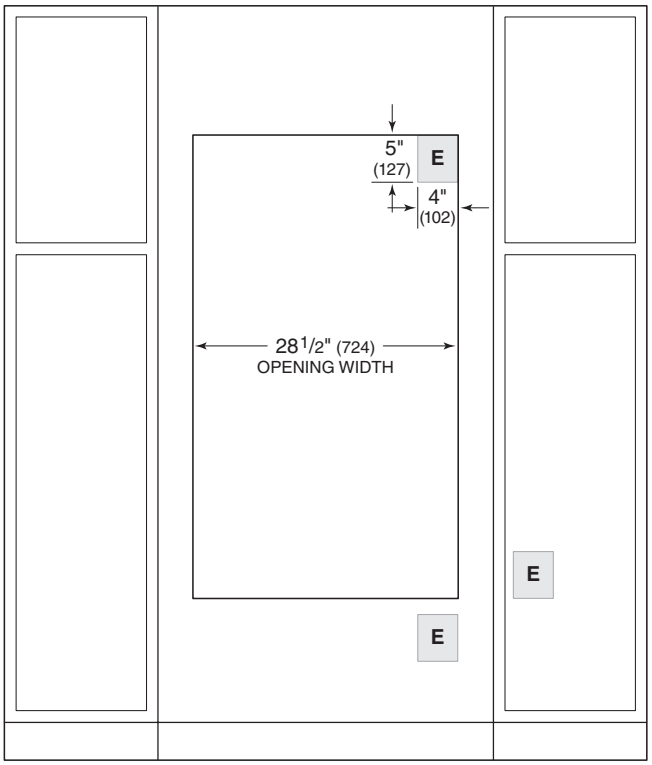

FRONT VIEW

NOTE: Location of electrical supply within opening may require additional cabinet depth.

30" E Series Double Oven

FLUSH INSET INSTALLATION

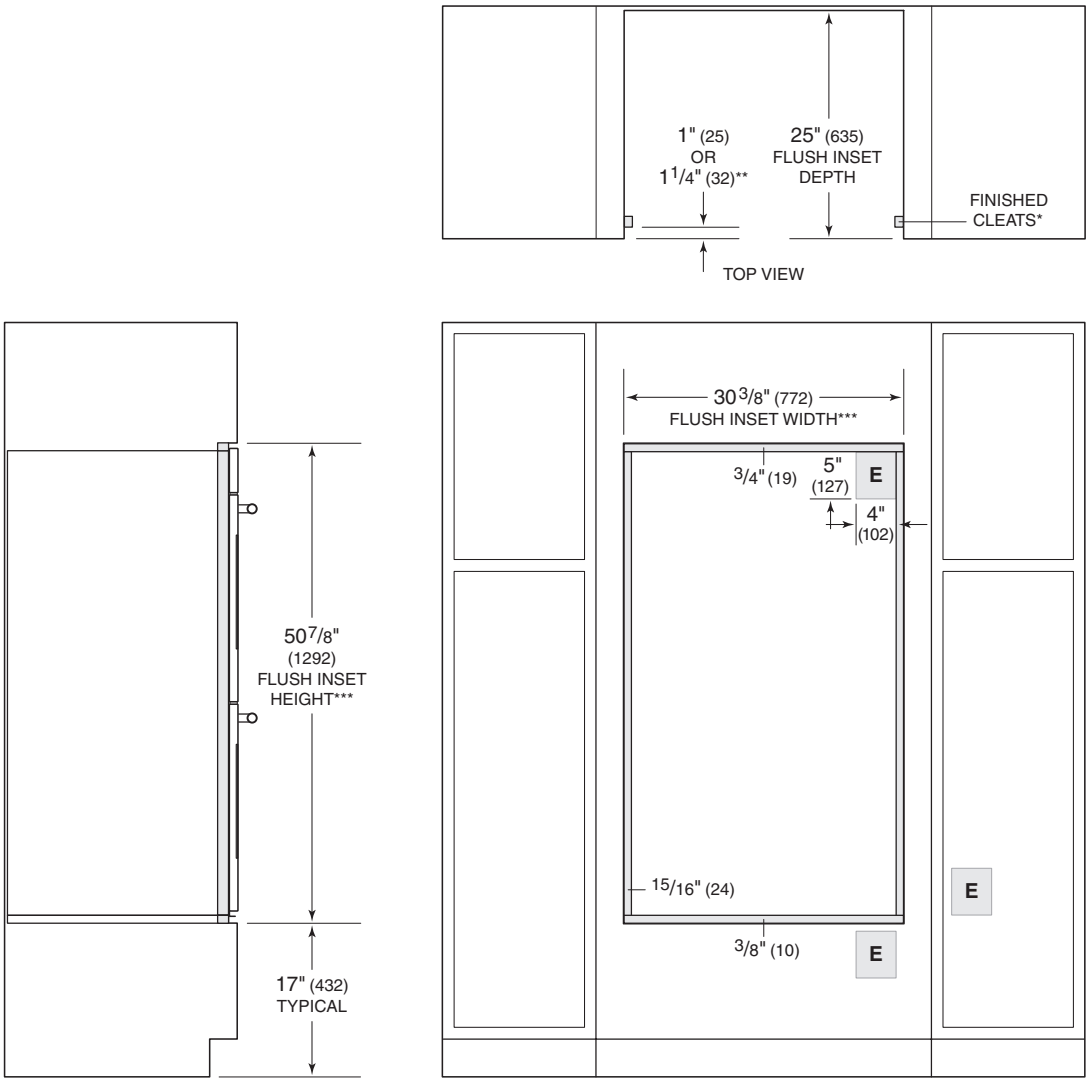

*Will be visible and should be finished to match cabinetry.
**1" (25) for professional and transitional models and 1 1/4" (32) for contemporary model.
***Dimension provides minimum reveals.

NOTE: Location of electrical supply within opening may require additional cabinet depth.

11:01
175°
WOLF

L Series Built-In Oven

Since their introduction, Wolf L series built-in ovens have taken the culinary world by storm—and not just for their stylish cobalt blue interior and 10 cooking modes. Thanks to a Wolf innovation called dual convection, the L series delivers faster, more consistent results for baking, roasting, broiling—even drying fruits. The Wolf L series oven is offered in the 36" width with unframed door style and tubular handle.

L SERIES OVEN

UNFRAMED

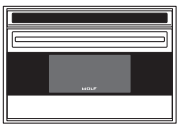

SO36U

L Series Built-In Oven

36" SINGLE OVEN

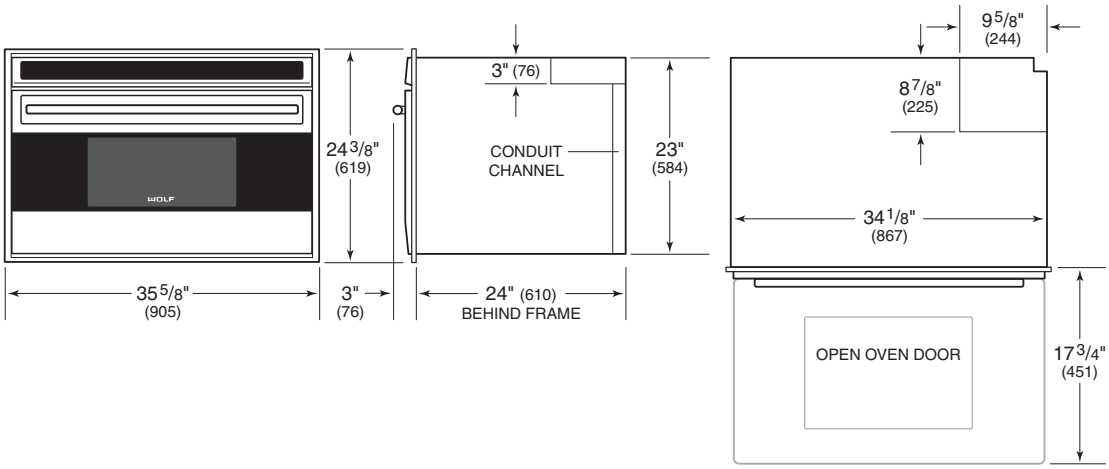

Planning Information

If a cooktop is being installed above an oven, a minimum of 1/4" (6) is required between the units. The location of the electrical supply within the oven opening may require additional cabinet depth.

Finish the edges of the opening. They may be visible when the door is open.

For standard installations, the face trim will overlap stiles and rails. Refer to the chart below.

INSTALLATION REQUIREMENTS

BASE SUPPORT	MIN
36" Single Oven	250 lb (113 kg)
TRIM OVERLAP	
Top	3/16" (5)
Bottom	1/8" (3)
Sides	9/16" (14)

ELECTRICAL REQUIREMENTS

Installation must comply with all applicable electrical codes.

Locate the electrical supply flush with the back wall and within the shaded area shown in the illustration on the following page. For ease of installation, the electrical supply for the oven can be placed in an adjacent cabinet within reach of the conduit.

Performance may be compromised if the electrical supply is less than 240 volts.

The oven is supplied with a conduit consisting of two insulated hot lead conductors and a bare ground conductor. The wiring diagram covering the control circuit is provided with the oven.

ELECTRICAL REQUIREMENTS

Electrical Supply	grounded, 240/208 VAC, 60 Hz
Service	30 amp dedicated circuit
Conduit	3' (.9 m)
Total Amps	21
Max Connected Load	5.1 kW

36" L Series Single Oven

STANDARD INSTALLATION

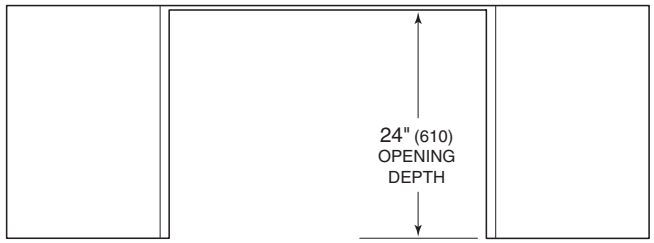

TOP VIEW

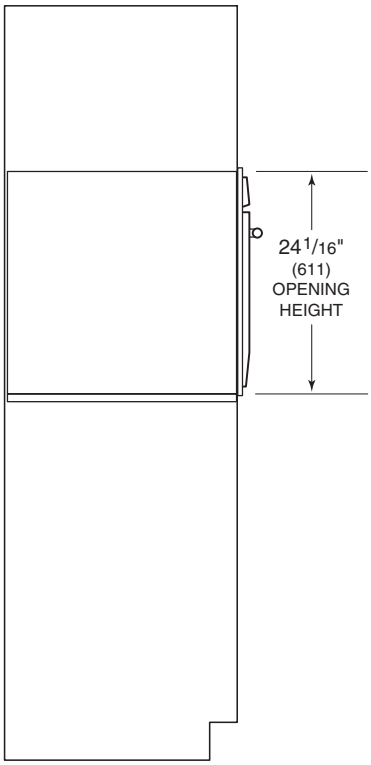

SIDE VIEW

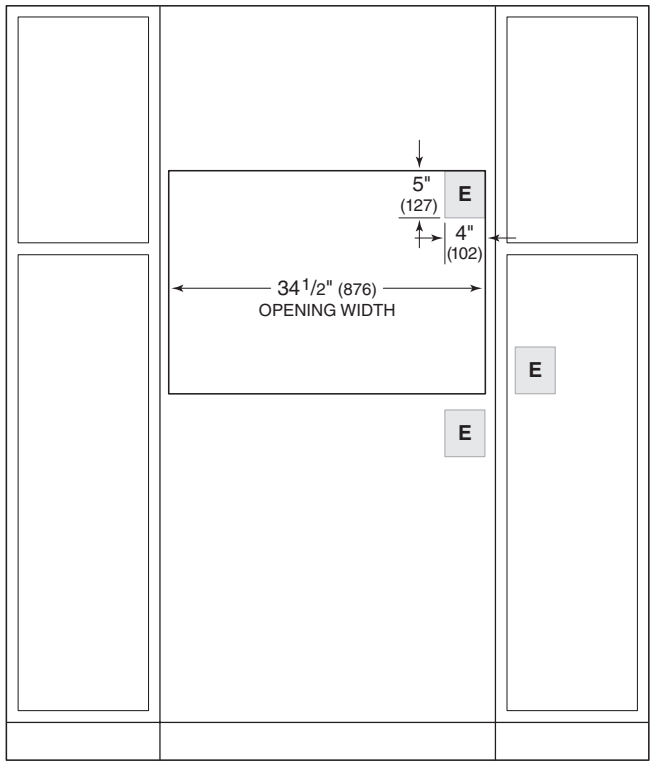

FRONT VIEW

NOTE: Location of electrical supply within opening may require additional cabinet depth.

WOLF

Convection Steam Ovens

The legacy of the “combination oven” goes back decades, to innovative chefs in America and Europe who embraced the combination of air movement with superheated steam to achieve superior results—from breads and roasts to delicate fishes, seafood, and vegetables. Wolf combines the benefits of convection and steam for the most innovative steam oven on the market today. Virtually any dish prepared in a conventional oven, range, or microwave can also be prepared in the Wolf convection steam oven—with more control. Two widths and three distinct styles compliment the look of Wolf ovens, ranges, and cooktops. Convection steam ovens can be installed in a standard or flush inset application.

CONVECTION STEAM OVENS

TRANSITIONAL

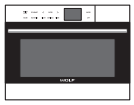

CSO24TE/S/TH

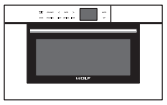

CSO30TM/S/TH

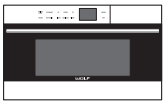

CSO30TE/S/TH

PROFESSIONAL

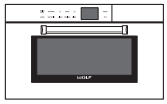

CSO30PM/S/PH

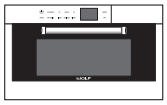

CSO30PE/S/PH

CONTEMPORARY

CSO30CM/B/TH

Convection Steam Ovens

TRANSITIONAL

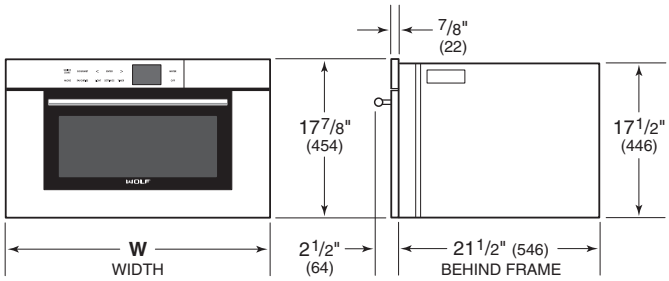

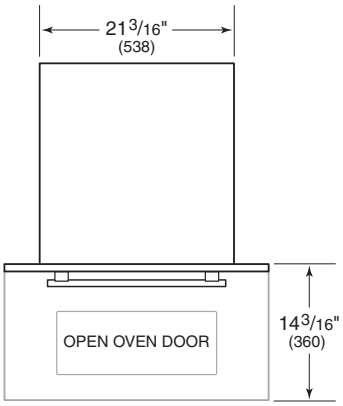

WIDTH	W
24" Transitional	23 1/2" (597)
30" Transitional	29 7/8" (759)

PROFESSIONAL

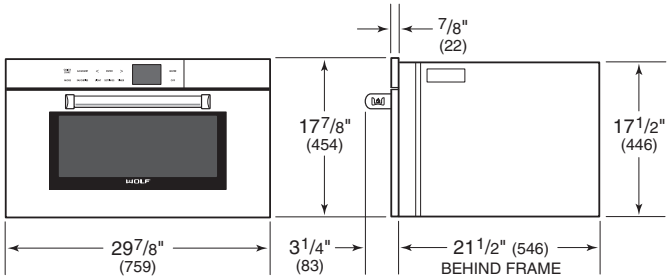

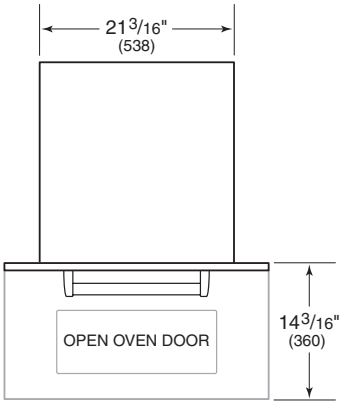

CONTEMPORARY

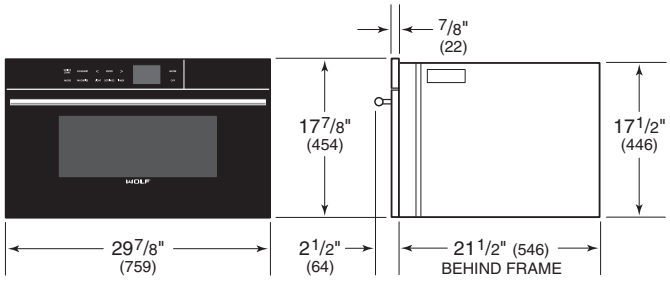

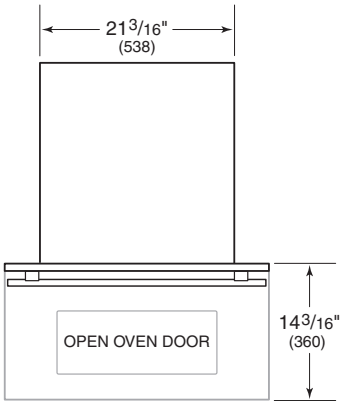

Planning Information

The convection steam oven can be installed in a standard or flush inset application. The electrical supply for the oven must be located in an adjacent cabinet.

Finish the edges of the opening. They may be visible when the door is open.

For standard installations, the face trim will overlap stiles and rails. Refer to the chart below.

For flush inset installations, a minimum 1/8" (3) reveal is required on all sides. To ensure consistent reveals, each corner of the opening must be exactly 90°.

INSTALLATION REQUIREMENTS

BASE SUPPORT		MIN
Convection Steam Oven		100 lb (45 kg)
TRIM OVERLAP	**24" MODEL**	**30" MODEL**
Top	3/16" (5)	3/16" (5)
Bottom	0" (0)	0" (0)
Sides	11/16" (18)	3 7/8" (98)

ELECTRICAL REQUIREMENTS

Installation must comply with all applicable electrical codes.

Locate the electrical supply as shown in the illustrations on the following pages. A separate circuit servicing only this appliance is required. A ground fault circuit interrupter (GFCI) is not recommended and may cause interruption of operation. Refer to the illustration below for minimum power cord plug clearance.

Performance may be compromised if the electrical supply is less than 240 volts.

ELECTRICAL REQUIREMENTS

Electrical Supply	grounded, 240/208 VAC, 60 Hz
Service	20 amp dedicated circuit
Receptacle	NEMA 6-20R grounding-type
Power Cord	6' (1.8 m)

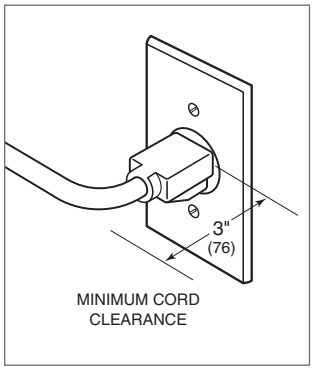

Power cord clearance

Convection Steam Oven

STANDARD INSTALLATION

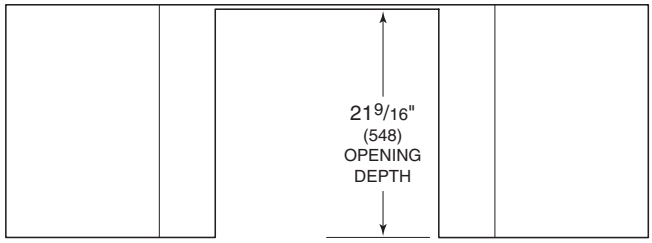

TOP VIEW

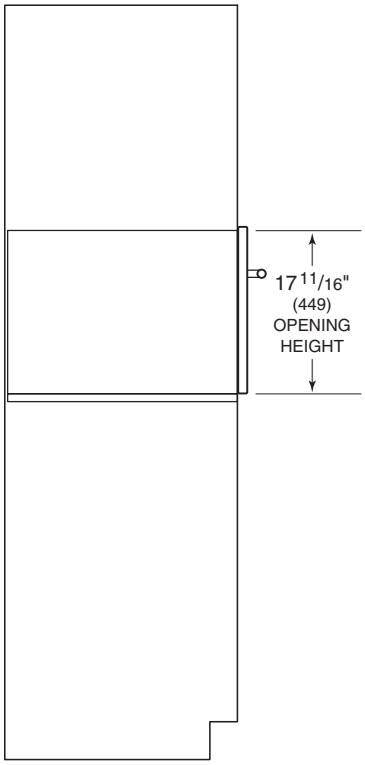

SIDE VIEW

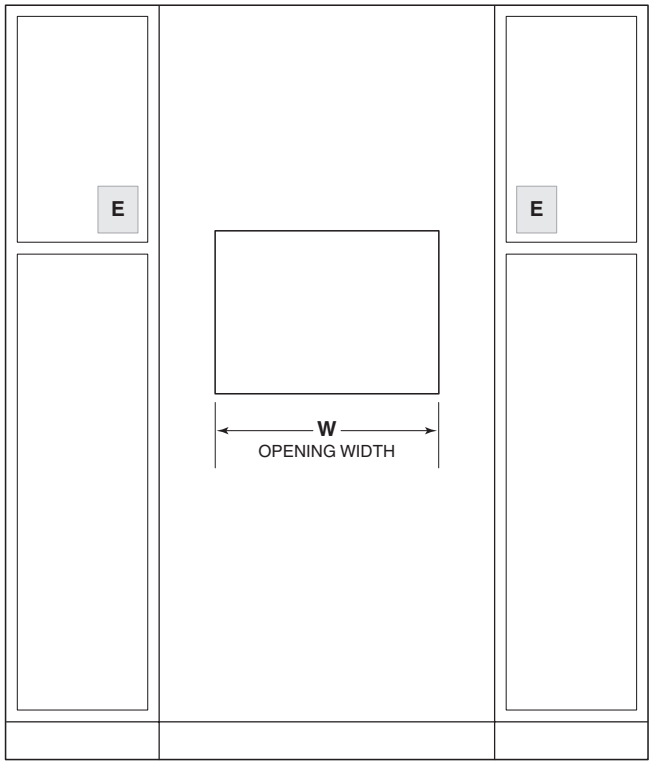

FRONT VIEW

NOTE: 24" (610) and 30" (762) models require the same opening dimensions.
Electrical supply must be located in adjacent cabinet within 3' (.9 m) of opening.

OPENING WIDTH	W
24" Model	22 1/8" (562)
30" Model	22 1/8" (562)

Convection Steam Oven

FLUSH INSET INSTALLATION

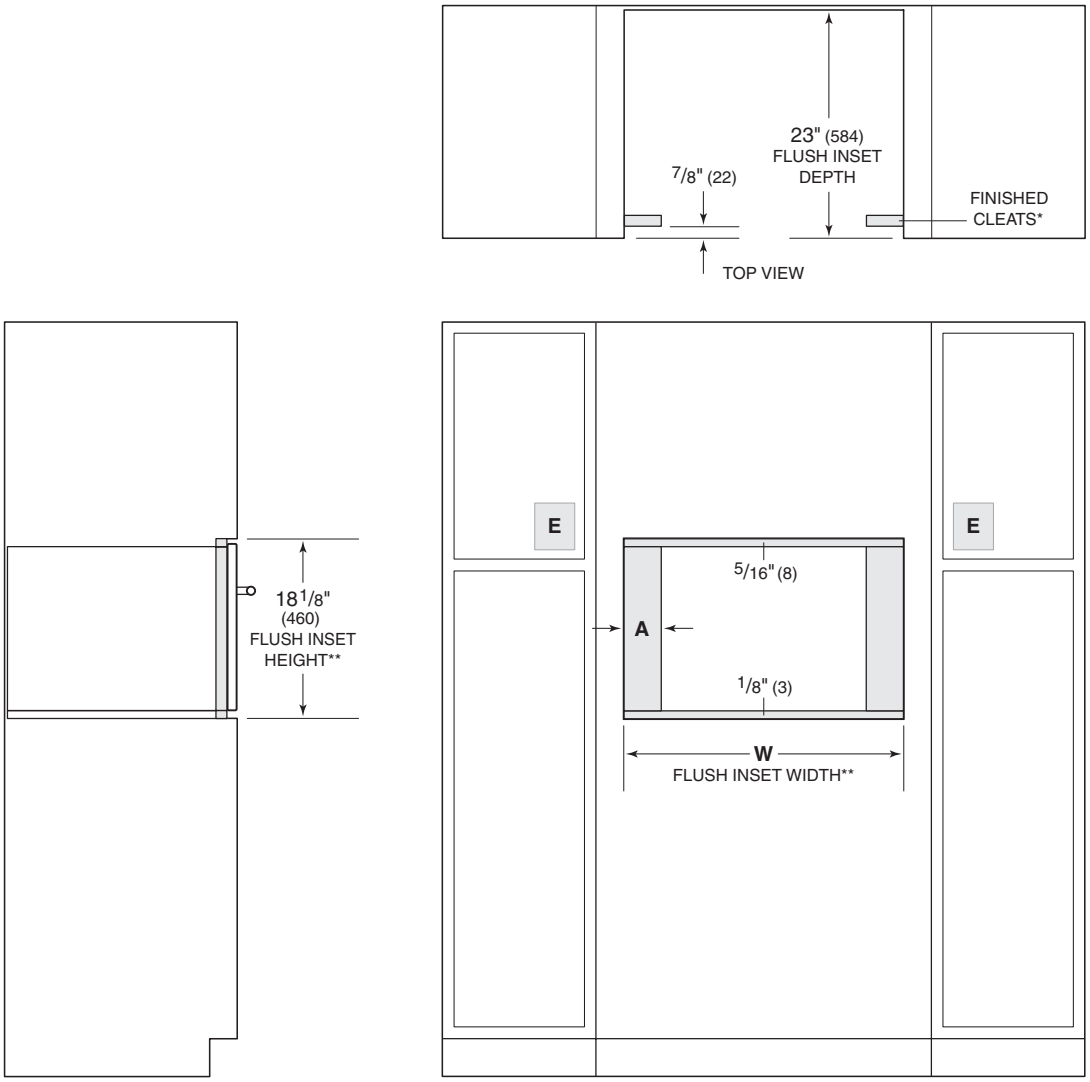

**Will be visible and should be finished to match cabinetry.*
***Dimension provides minimum reveals.*

NOTE: Electrical supply must be located in adjacent cabinet within 3' (.9 m) of opening.

FLUSH INSET WIDTH	W	A
24" Model	23 3/4" (603)	13/16" (21)
30" Model	30 1/8" (765)	4" (102)

WOLF
SUBZERO
WOLF
WOLF

Microwave Ovens

As true cooking instruments, Wolf microwave ovens have features that make fast meals better meals. The new drop-down door microwaves feature a door that hinges at the bottom for easier access to foods. Available in 24" and 30" widths, they are designed to match Wolf transitional, professional, and contemporary products. Drawer microwave ovens can be conveniently located undercounter, in a corner, or below an oven. Wolf also offers both a roomy, powerful standard microwave and a convection model that can microwave, broil, and cook in three convection modes. Trim kits to match Wolf ovens are available through an authorized Wolf dealer. Microwave ovens can be installed in a standard or flush inset application.

DROP-DOWN DOOR MICROWAVES

TRANSITIONAL

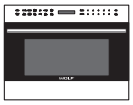

MDD24TE/S/TH

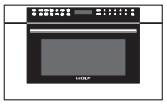

MDD30TM/S/TH

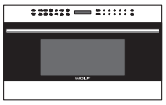

MDD30TE/S/TH

PROFESSIONAL

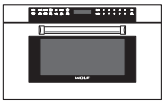

MDD30PM/S/PH

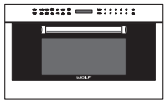

MDD30PE/S/PH

CONTEMPORARY

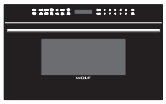

MDD30CM/B/TH

DRAWER MICROWAVE

TRANSITIONAL

MD24TE/S

MD30TE/S

PROFESSIONAL

MD30PE/S

CONVECTION MICROWAVE

MC24 (M/E TRIM)

MC24 (L TRIM)

STANDARD MICROWAVE

MS24 (M/E TRIM)

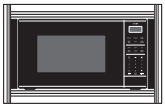

MS24 (L TRIM)

Drop-Down Door Microwave Ovens

TRANSITIONAL

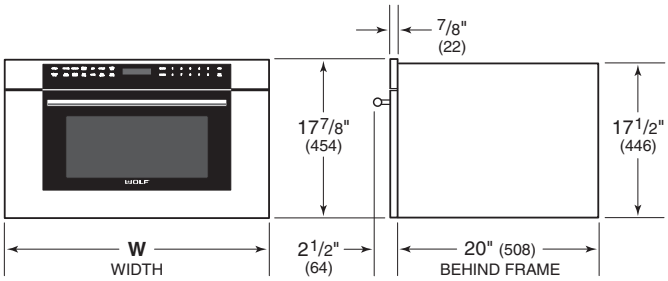

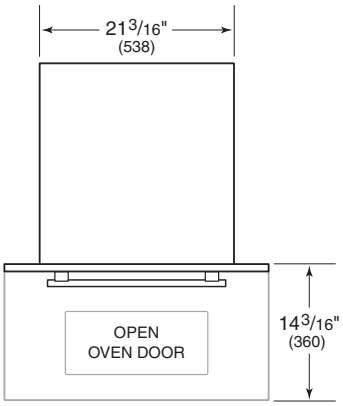

WIDTH	W
24" Transitional	231/2" (597)
30" Transitional	297/8" (759)

PROFESSIONAL

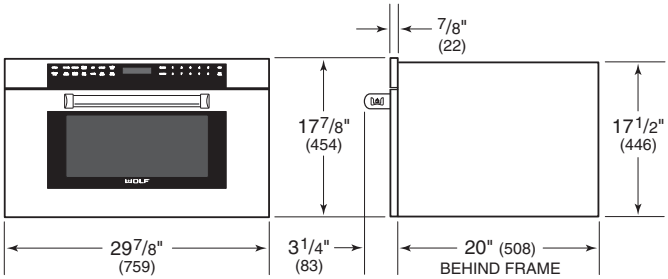

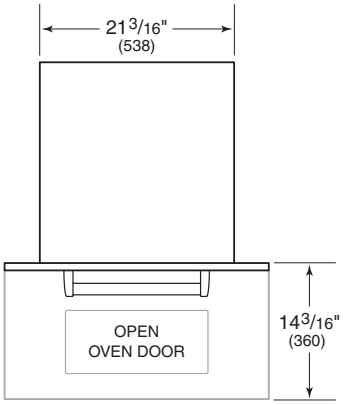

CONTEMPORARY

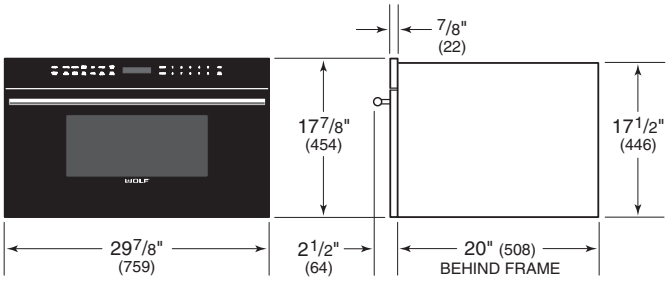

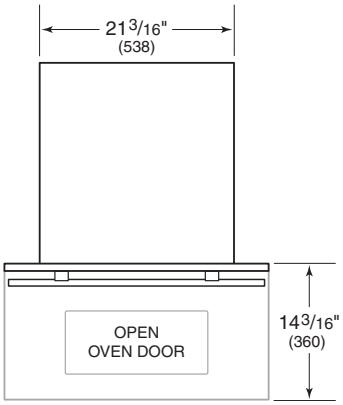

Drawer Microwave Ovens

TRANSITIONAL / PROFESSIONAL

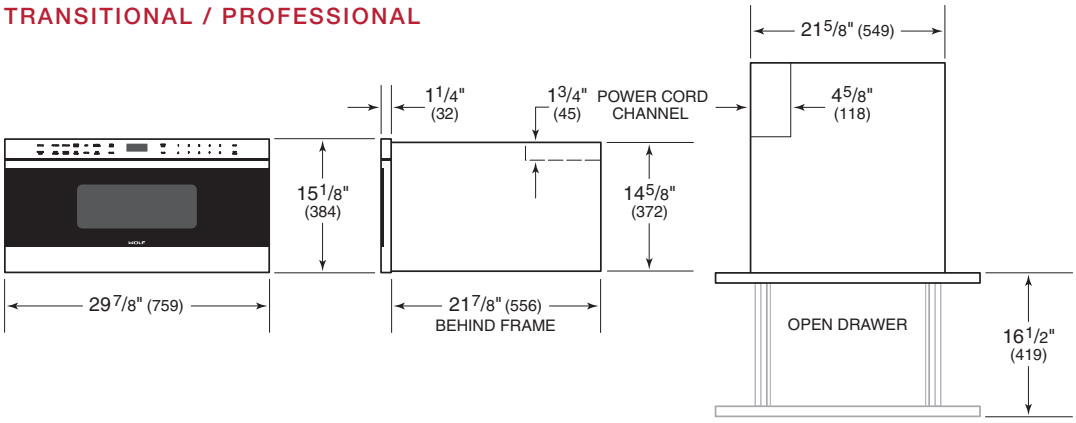

WIDTH	W
24" Model	23 7/8" (606)
30" Model	29 7/8" (759)

Convection Microwave Oven

M/E SERIES TRIM

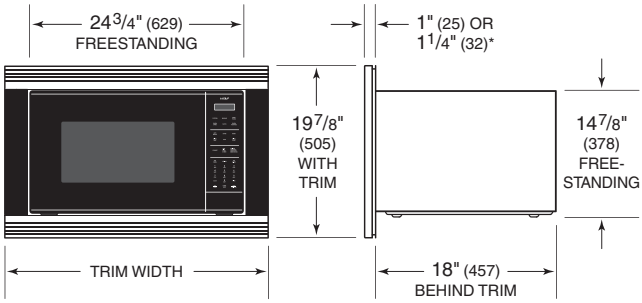

L SERIES TRIM

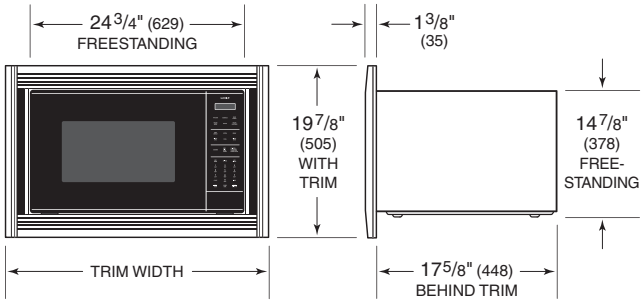

**1 1/4" (32) for contemporary E series trim only.*

TRIM WIDTH	M SERIES	E SERIES	L SERIES
27" Trim	NA	26 7/8" (683)	NA
30" Trim	29 7/8" (759)	29 7/8" (759)	29 7/8" (759)
36" Trim	NA	NA	35 5/8" (905)

Standard Microwave Oven

M/E SERIES TRIM

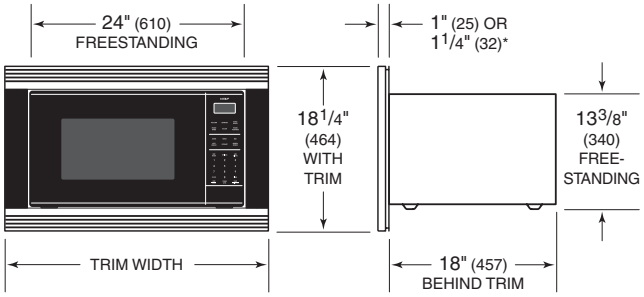

L SERIES TRIM

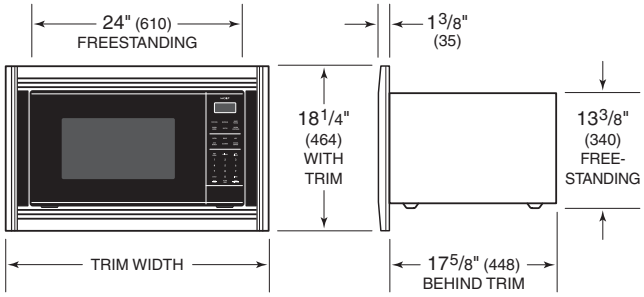

**1 1/4" (32) for contemporary E series trim only.*

TRIM WIDTH	M SERIES	E SERIES	L SERIES
27" Trim	NA	26 7/8" (683)	NA
30" Trim	29 7/8" (759)	29 7/8" (759)	29 7/8" (759)

Planning Information

DROP-DOWN DOOR MICROWAVE

The drop-down door microwave oven can be installed in a standard or flush inset application.

Finish the edges of the opening. They may be visible when the door is open.

For standard installations, the face trim will overlap stiles and rails. Refer to the chart below.

For flush inset installations, a minimum 1/8" (3) reveal is required on all sides. To ensure consistent reveals, each corner of the opening must be exactly 90°.

INSTALLATION REQUIREMENTS

BASE SUPPORT		MIN
Drop-Down Door Microwave		125 lb (57 kg)
TRIM OVERLAP	**24" MODEL**	**30" MODEL**
Top	3/16" (5)	3/16" (5)
Bottom	0" (0)	0" (0)
Sides	11/16" (18)	3 7/8" (98)

DRAWER MICROWAVE

The drawer microwave oven can be installed in a standard or flush inset application. The location of the electrical supply within the oven opening may require additional cabinet depth.

Finish the edges of the opening. They may be visible when the drawer is open.

For standard installations, the face trim will overlap stiles and rails. Refer to the chart below.

For flush inset installations, a minimum 1/8" (3) reveal is required on the top and sides and 11/16" (18) on the bottom. To ensure consistent reveals, each corner of the opening must be exactly 90°. A sales accessory is required to direct air away from the unit. Accessories are available through an authorized Wolf dealer. For local dealer information, visit the find a showroom section of our website, wolfappliance.com.

INSTALLATION REQUIREMENTS

BASE SUPPORT		MIN
24" Drawer Microwave		125 lb (57 kg)
30" Drawer Microwave		125 lb (57 kg)
TRIM OVERLAP	**24" MODEL**	**30" MODEL**
Top	5/16" (8)	5/16" (8)
Bottom	1/16" (2)	1/16" (2)
Sides	7/8" (22)	3 7/8" (98)

Planning Information

CONVECTION / STANDARD MICROWAVES

Convection and standard microwave ovens can be installed in a standard or flush inset application using accessory trim to match Wolf ovens. Trim kits are available through an authorized Wolf dealer. For local dealer information, visit the find a showroom section of our website, wolfappliance.com.

For standard installations, the face trim will overlap stiles and rails. Refer to the chart below.

Convection and standard microwave ovens can also be used freestanding. For freestanding applications, a minimum 2" (51) space is required at the top, rear, and sides of the microwave oven for air circulation.

INSTALLATION REQUIREMENTS

BASE SUPPORT		MIN
Convection Microwave		125 lb (57 kg)
Standard Microwave		125 lb (57 kg)
27" E SERIES TRIM OVERLAP	**CONV**	**STAN**
Top	1/4" (6)	9/16" (14)
Bottom	3/4" (19)	11/16" (17)
Sides	13/16" (21)	13/16" (21)
30" M/E/L TRIM OVERLAP	**CONV**	**STAN**
Top	1/4" (6)	9/16" (14)
Bottom	3/4" (19)	11/16" (17)
Sides	1 3/16" (30)	1 3/16" (30)
36" L SERIES TRIM OVERLAP	**CONV**	**STAN**
Top	3/16" (5)	NA
Bottom	13/16" (21)	NA
Sides	1 1/4" (32)	NA

ELECTRICAL REQUIREMENTS

Installation must comply with all applicable electrical codes.

Locate the electrical supply as shown in the illustrations on the following pages. The receptacle may also be located in an adjacent cabinet within reach of the power cord. A separate circuit servicing only this appliance is required. A ground fault circuit interrupter (GFCI) is not recommended and may cause interruption of operation. Refer to the illustration below for minimum power cord plug clearance.

ELECTRICAL REQUIREMENTS

Electrical Supply	grounded, 120 VAC, 60 Hz
Service	15 amp dedicated circuit
Receptacle	3-prong grounding-type
Power Cord	4' (1.2 m)

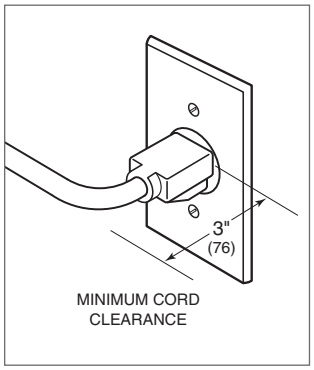

Power cord clearance

Drop-Down Door Microwave Oven

STANDARD INSTALLATION

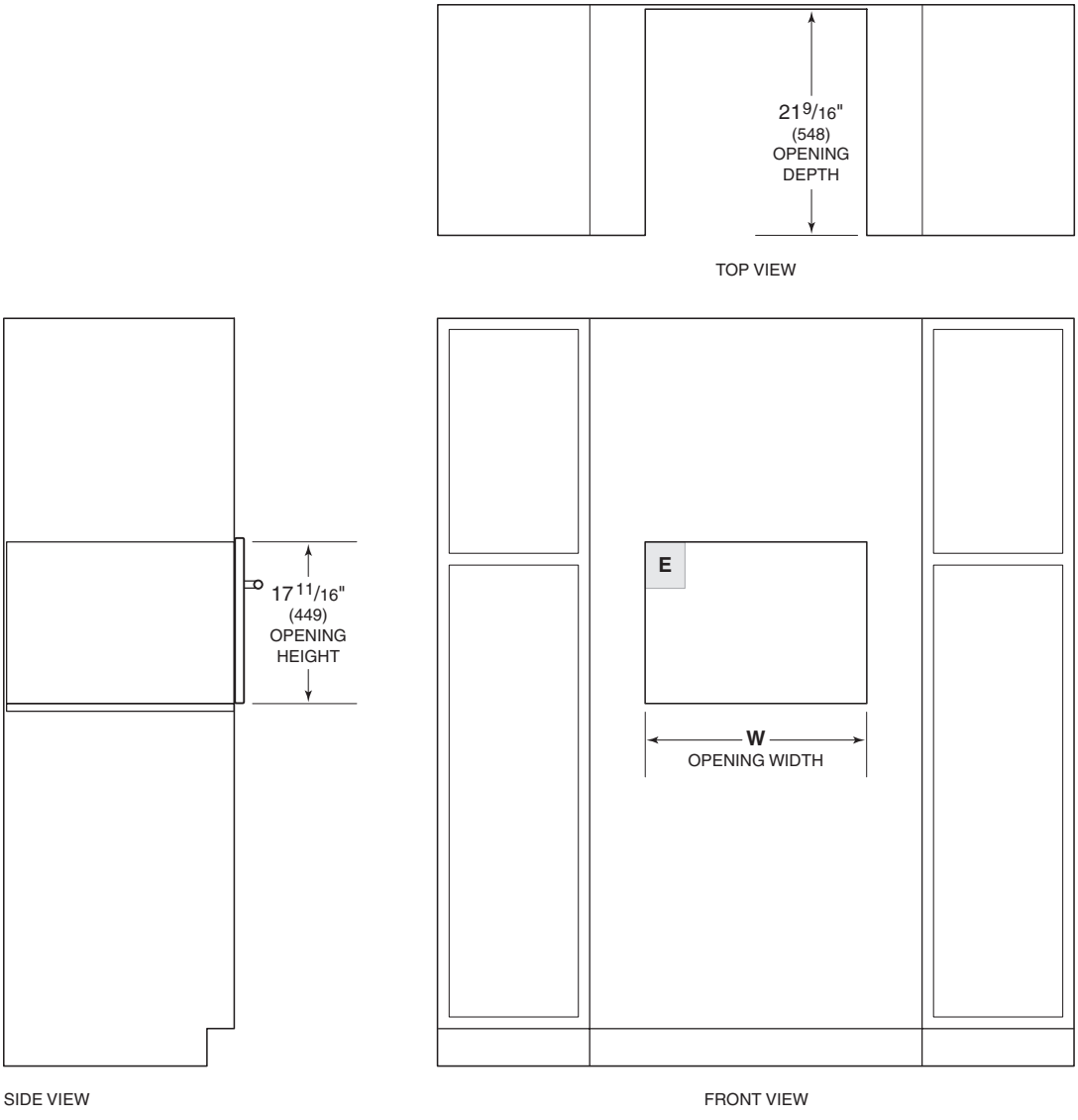

NOTE: 24" (610) and 30" (762) models require the same opening dimensions.

OPENING WIDTH	W
24" Model	22 1/8" (562)
30" Model	22 1/8" (562)

Drop-Down Door Microwave Oven

FLUSH INSET INSTALLATION

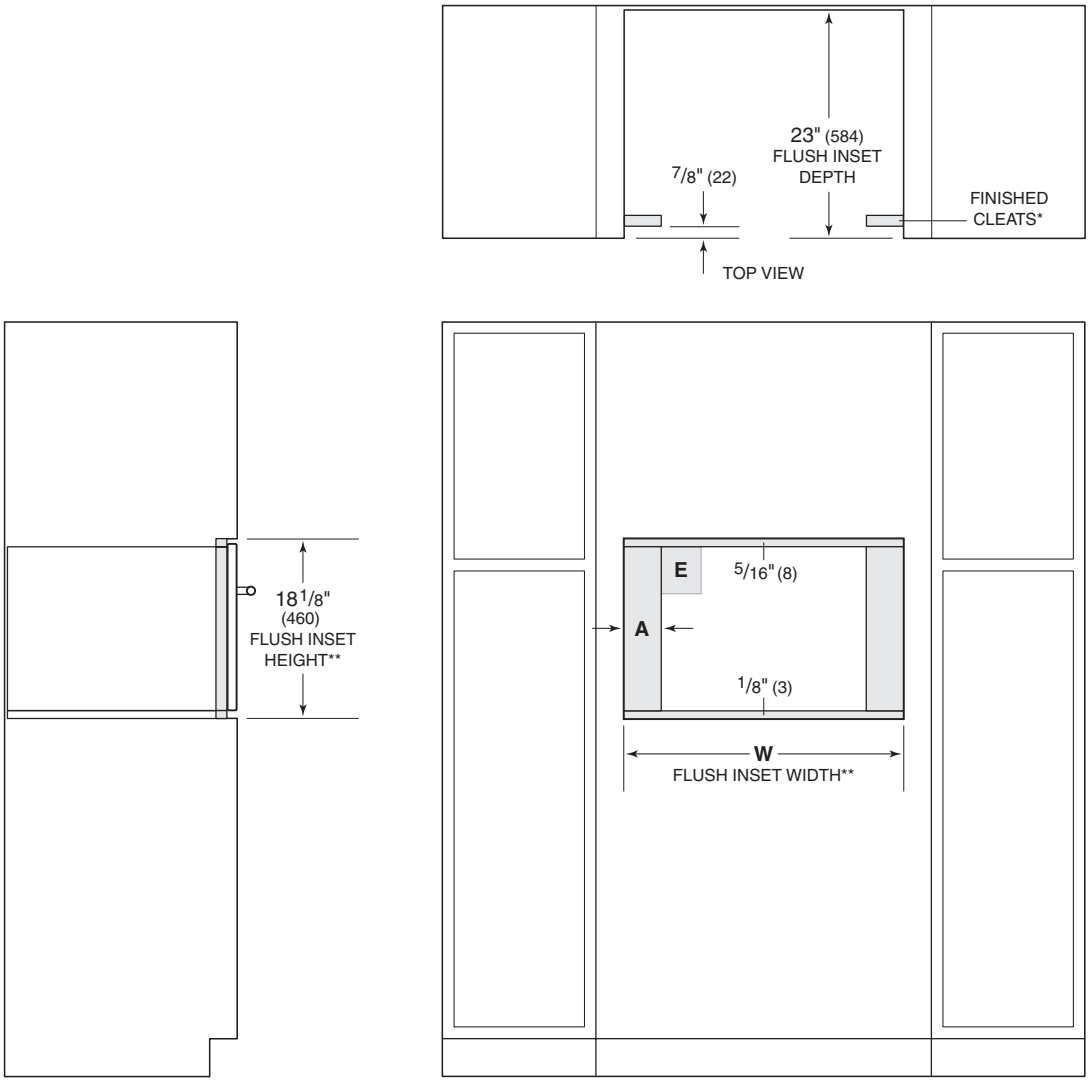

**Will be visible and should be finished to match cabinetry.*
***Dimension provides minimum reveals.*

FLUSH INSET WIDTH	W	A
24" Model	23 3/4" (603)	13/16" (21)
30" Model	30 1/8" (765)	4" (102)

Drawer Microwave Oven

STANDARD INSTALLATION

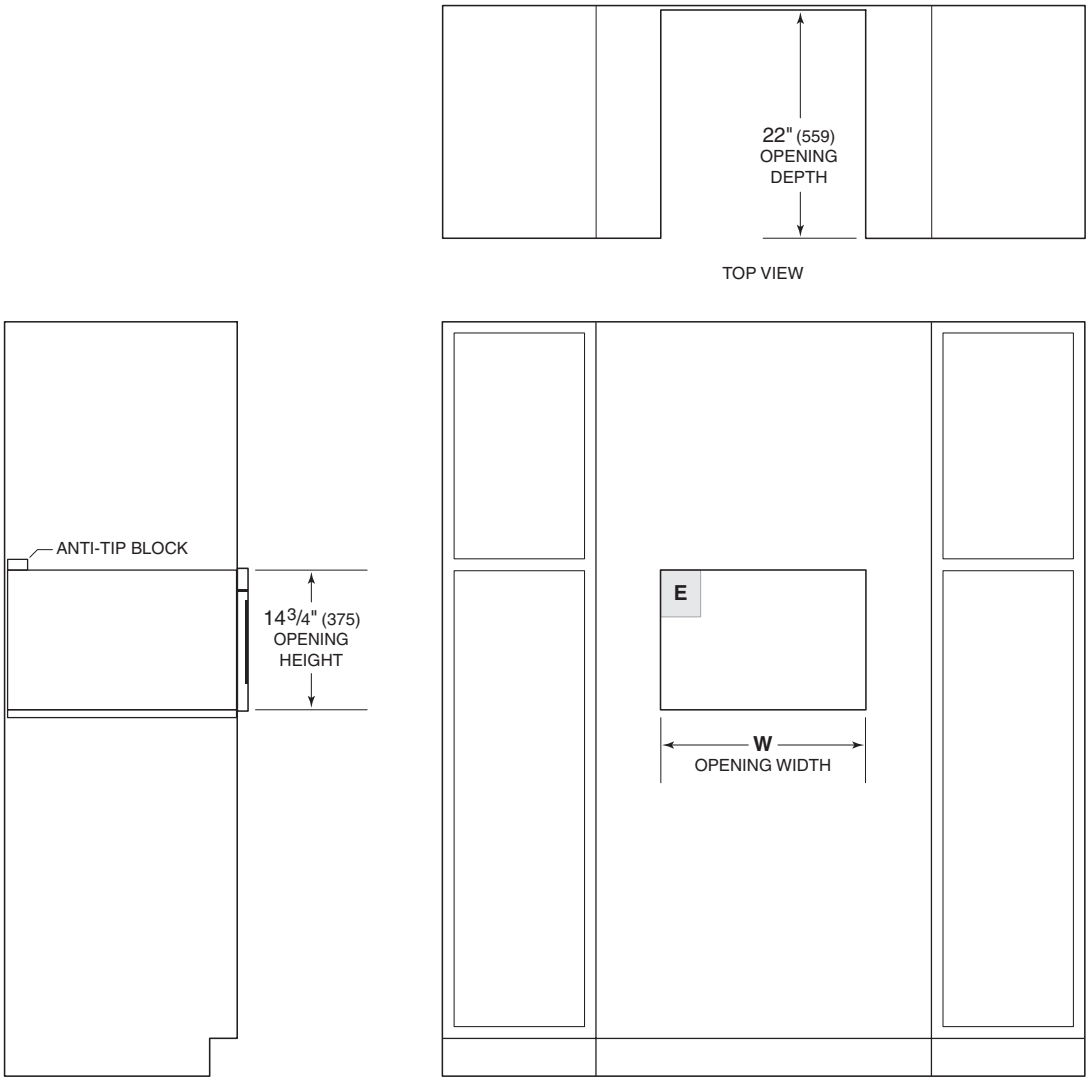

NOTE: All drawer microwave ovens require the same opening dimensions.

OPENING WIDTH	W
24" Model	22 1/8" (562)
30" Model	22 1/8" (562)

Drawer Microwave Oven

FLUSH INSET INSTALLATION

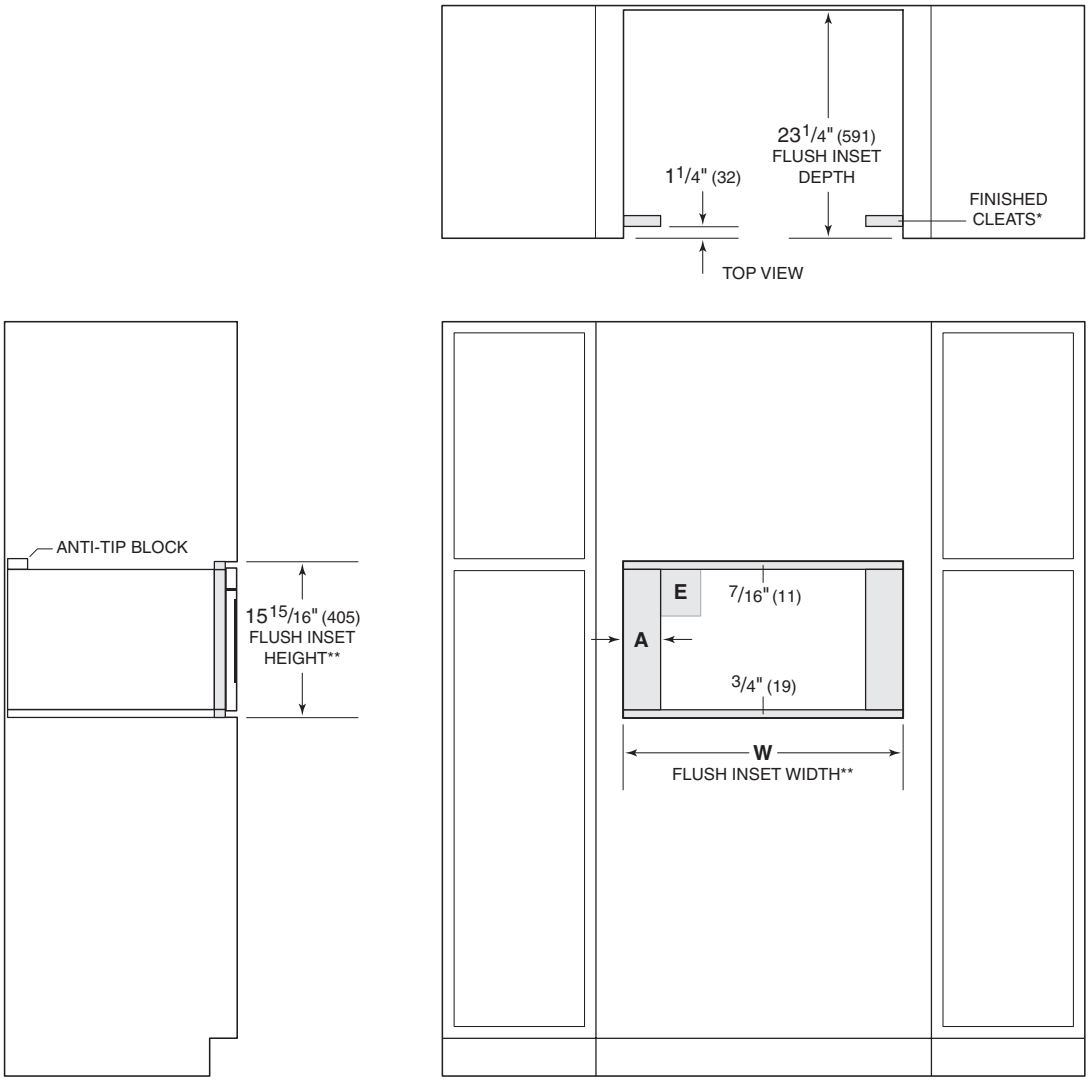

**Will be visible and should be finished to match cabinetry.*
***Dimension provides minimum reveals.*

FLUSH INSET WIDTH	W	A
24" Model	24 1/8" (613)	1" (25)
30" Model	30 1/8" (765)	4" (102)

Convection Microwave Oven

STANDARD INSTALLATION WITH TRIM

OPENING WIDTH	W
27" Trim	25 1/4" (641)
30" Trim	27 1/2" (699)
36" Trim	33 3/8" (854)

Convection Microwave Oven

FLUSH INSET INSTALLATION WITH TRIM

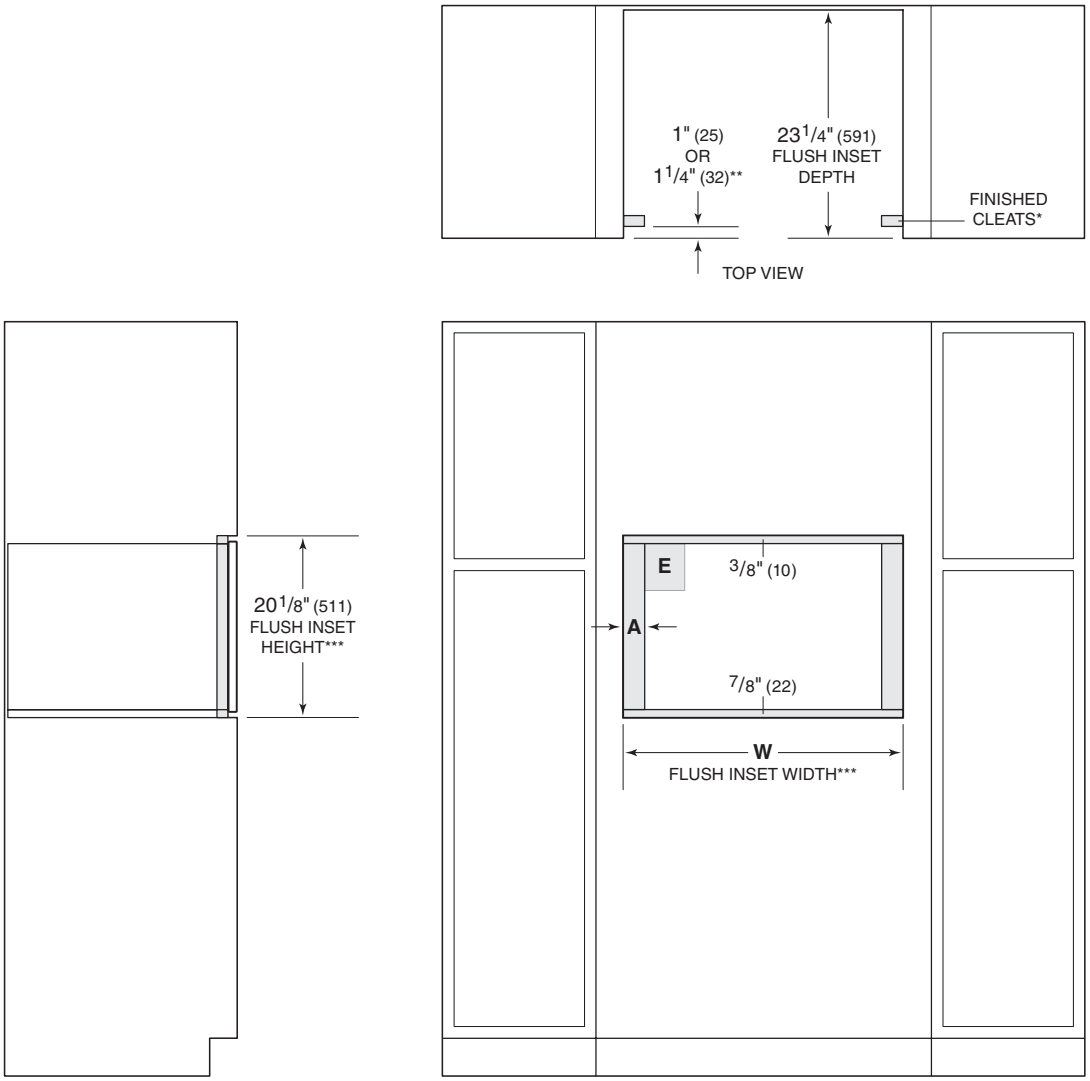

**Will be visible and should be finished to match cabinetry.*
***1 1/4" (32) for contemporary E series trim only.*
****Dimension provides minimum reveals.*

FLUSH INSET WIDTH	W	A
27" Trim	27 1/8" (689)	15/16" (24)
30" Trim	30 1/8" (765)	1 3/16" (30)

Standard Microwave Oven

STANDARD INSTALLATION WITH TRIM

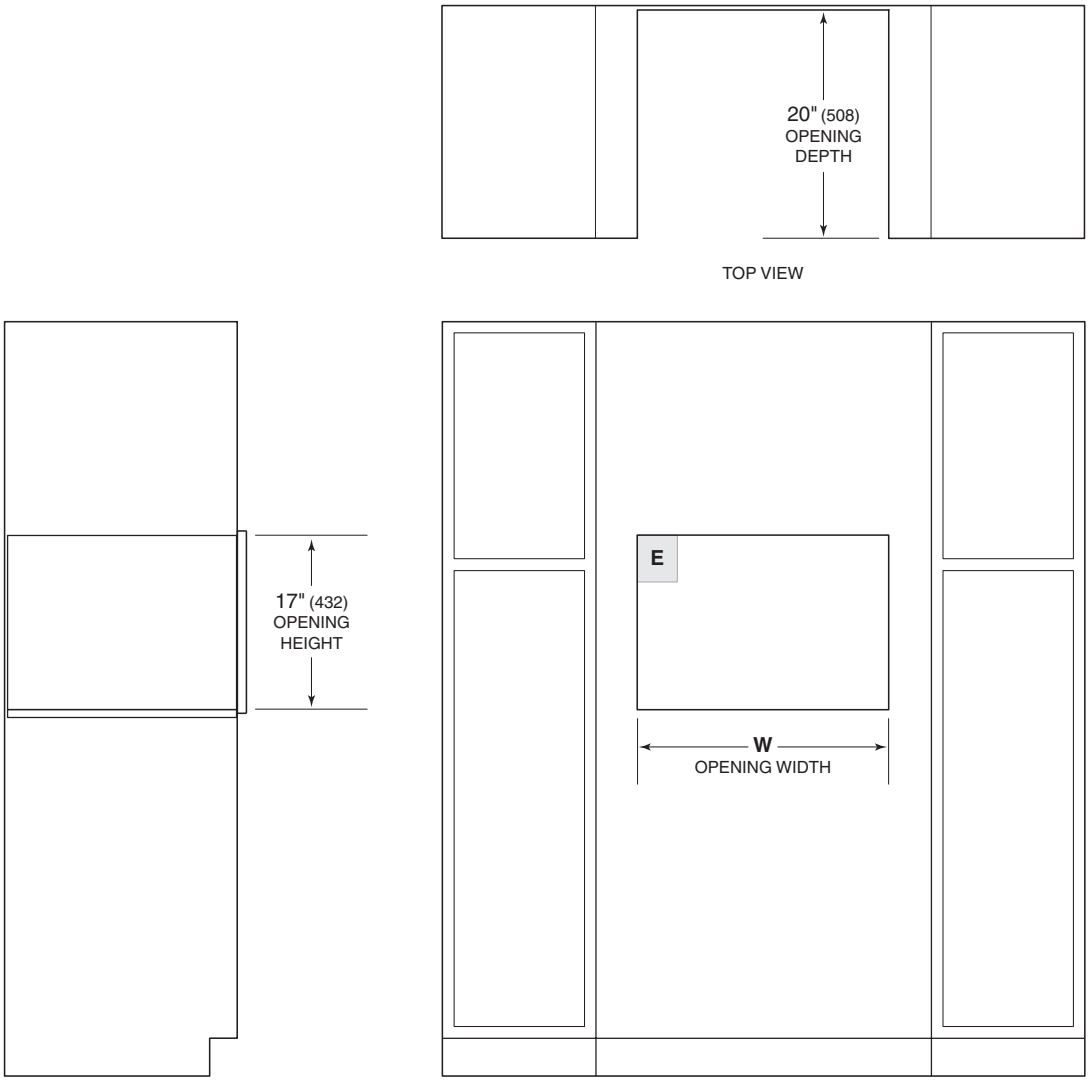

OPENING WIDTH	W
27" Trim	25 1/4" (641)
30" Trim	27 1/2" (699)

Standard Microwave Oven

FLUSH INSET INSTALLATION WITH TRIM

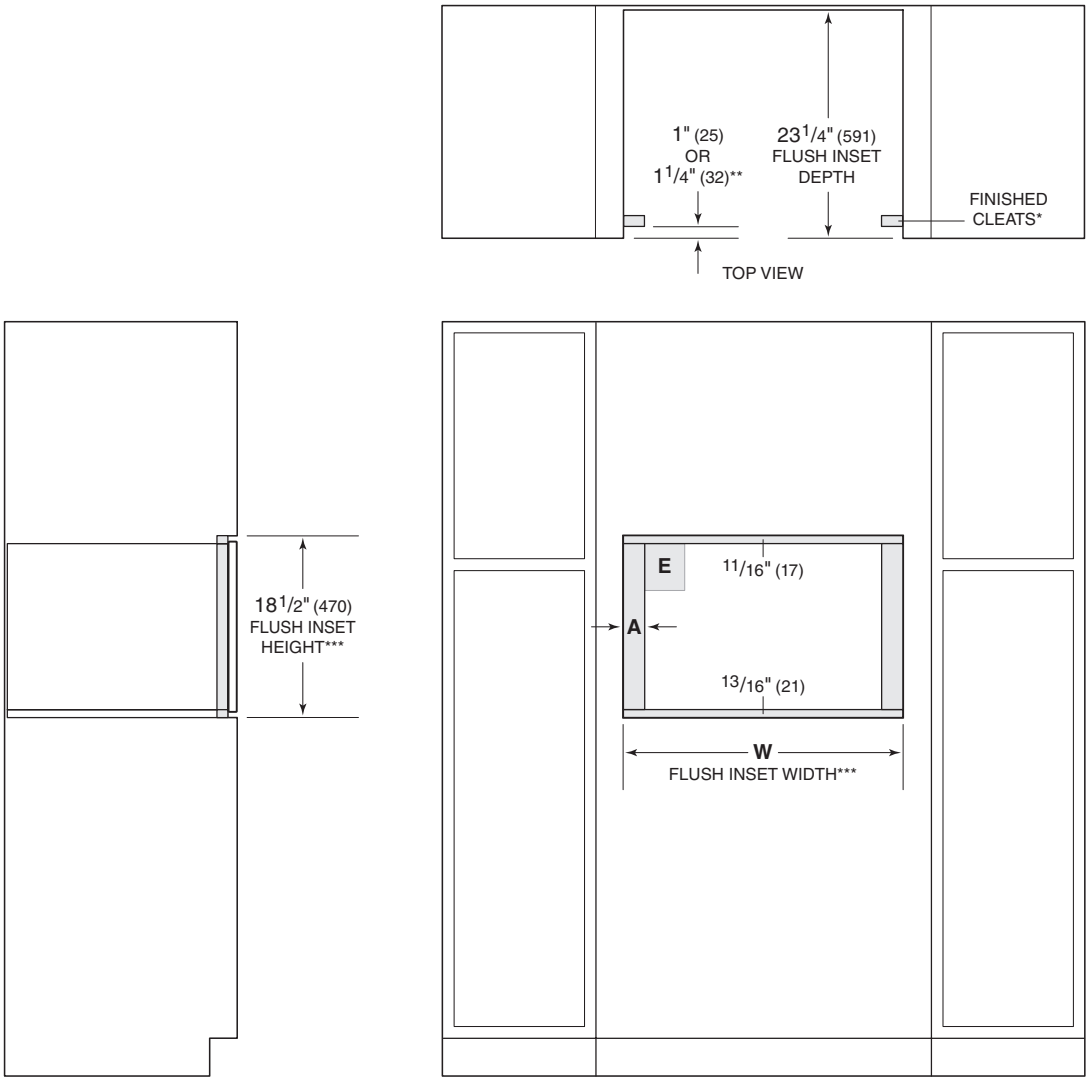

**Will be visible and should be finished to match cabinetry.*
***1 1/4" (32) for contemporary E series trim only.*
****Dimension provides minimum reveals.*

FLUSH INSET WIDTH	W	A
27" Trim	27 1/8" (689)	15/16" (24)
30" Trim	30 1/8" (765)	1 3/16" (30)

WOLF

Warming Drawers

Wolf warming drawers are designed to take care of prepared foods until it's time to serve them. You can adjust the temperature, keeping moist foods moist, and crisp foods crisp. Warming drawers are ideal for proofing dough. They can also be used to warm robes and towels. Drawer fronts are available to match the look of Wolf ovens, sealed burner rangetops, and outdoor grills. The integrated drawer front allows for a custom panel and handle. Model WWD30O, approved for outdoor installations, is ideal for any outdoor kitchen.

WARMING DRAWER FRONTS

M/E SERIES

TRANSITIONAL

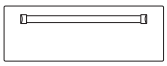

PROFESSIONAL

CONTEMPORARY

L SERIES

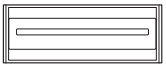

TRANSITIONAL

INTEGRATED

CUSTOM PANEL

Warming Drawers

DRAWER FRONT OPTIONS

Wolf warming drawer fronts allow for many design options, but the warming drawer itself will be the same for all applications. A panel mounting kit is required when installing a custom panel. The panel mounting kit is available through an authorized Wolf dealer. For local dealer information, visit the find a showroom section of our website, wolfappliance.com.

The 2" (51) thick drawer front, in 30" and 36" widths, is designed to be installed below a sealed burner rangetop or outdoor gas grill, so the panel aligns properly with the front of the rangetop or grill. Dimensions for the warming drawer remain the same, even though the drawer front may be wider to match a Wolf 36" oven, sealed burner rangetop, or outdoor grill.

DIMENSIONS

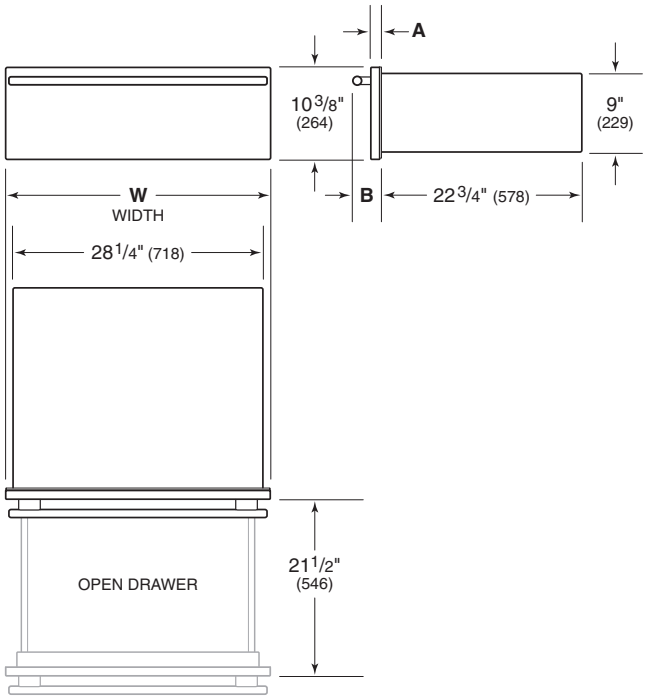

STAINLESS STEEL DRAWER FRONT

WIDTH	W
30" Drawer Front	29 7/8" (759)
36" Drawer Front	35 7/8" (911)

M SERIES	A	B
Transitional/Professional	7/8" (22)	3 1/4" (83)
Contemporary Stainless	7/8" (22)	3 1/4" (83)
Contemporary Black	1" (25)	3 3/8" (86)

E SERIES	A	B
Transitional/Professional	1 1/8" (29)	3 1/2" (89)
Professional (2" thick)	2 1/8" (54)	4 1/2" (114)
Contemporary	1 1/4" (32)	3 5/8" (92)

L SERIES	A	B
Transitional	7/8" (22)	3 1/2" (89)

INTEGRATED DRAWER FRONT

CUSTOM PANEL	W	H	D
Dimensions (typical)	29 7/8" (759)	10 3/8" (264)	3/4" (19)
Min Thickness			5/8" (16)

Planning Information

The warming drawer must be installed with a Wolf drawer front, available through an authorized Wolf dealer. For local dealer information, visit the find a showroom section of our website, wolfappliance.com. Specific installation instructions are included with the drawer front.

The warming drawer can be installed in a standard or flush inset application (excludes L series drawer front).

For a standard installation, the drawer collar and front panel sit proud of the cabinet face frame. A recessed installation requires the cabinetry be recessed by 3/16" (5) so the collar is flush with the cabinet face frame but the drawer front will sit proud. A flush inset installation (excludes L series) requires the drawer collar and front panel be recessed to be flush with surrounding cabinetry. Refer to illustrations on the following pages for minimum cabinet dimensions for your specific installation.

Finish the edges of the opening. They may be visible when the drawer is open.

For standard installations, the face trim will overlap stiles and rails. Refer to the chart below.

For flush inset installations, a minimum 1/8" (3) reveal is required on all sides. To ensure consistent reveals, each corner of the opening must be exactly 90°.

Model WWD30O is CSA approved for outdoor installations.

INSTALLATION REQUIREMENTS

Min Base Support	200 lb (90 kg)
Trim Overlap (top, bottom, sides)	5/8" (16)

ELECTRICAL REQUIREMENTS

Installation must comply with all applicable electrical codes.

Locate the electrical supply flush with the back wall and within the shaded area shown in the illustrations on the following pages. For ease of installation, the electrical supply for the warming drawer can be placed in an adjacent cabinet within reach of the power cord.

IMPORTANT NOTE: When installed outdoors, a ground fault circuit interrupter (GFCI) is required to reduce the risk of electrical shock.

ELECTRICAL REQUIREMENTS

Electrical Supply	grounded, 120 VAC, 60 Hz
Service	15 amp dedicated circuit
Receptacle	3-prong grounding-type
Power Cord	3' (.9 m)

Warming Drawer

STANDARD INSTALLATION

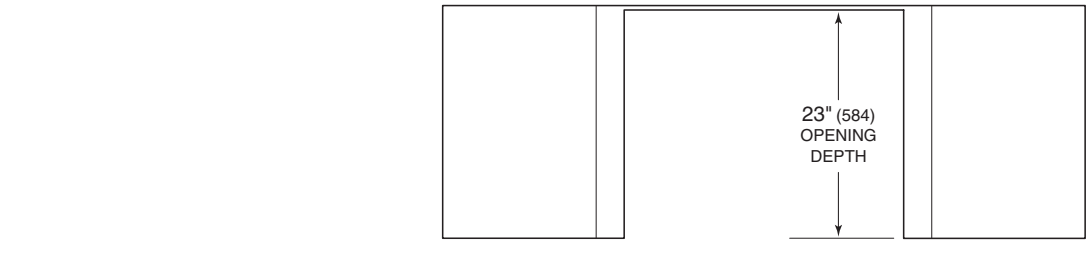

TOP VIEW

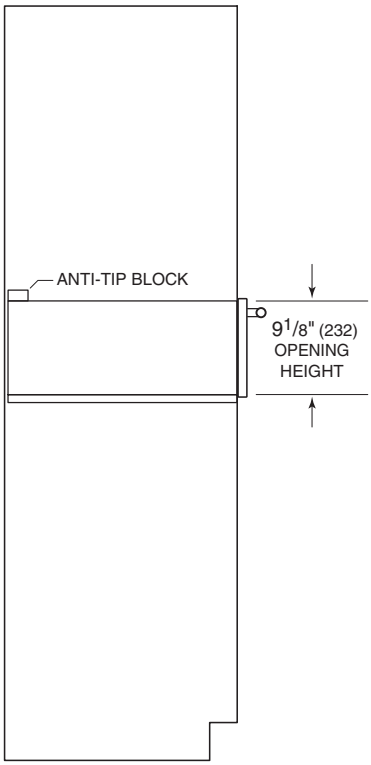

SIDE VIEW

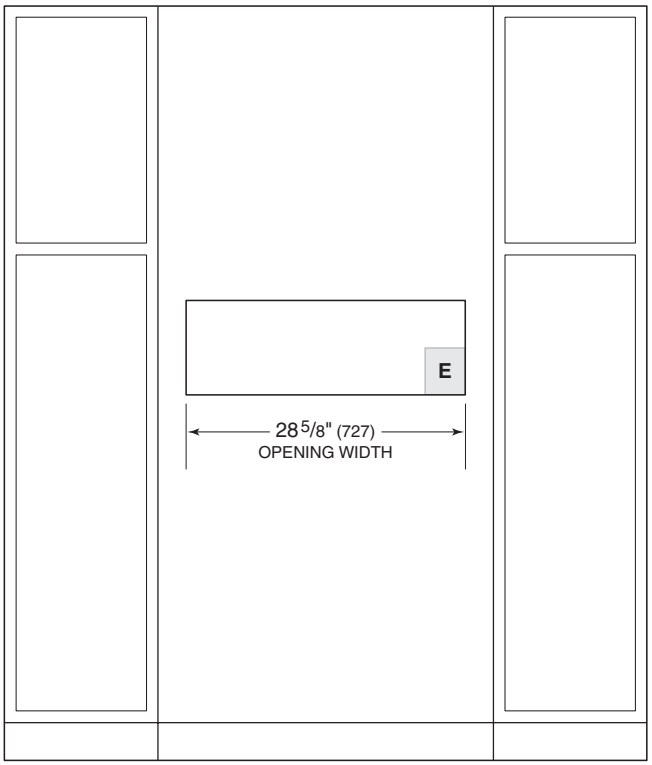

FRONT VIEW

NOTE: Location of electrical supply within opening may require additional cabinet depth.

Warming Drawer

FLUSH INSET INSTALLATION

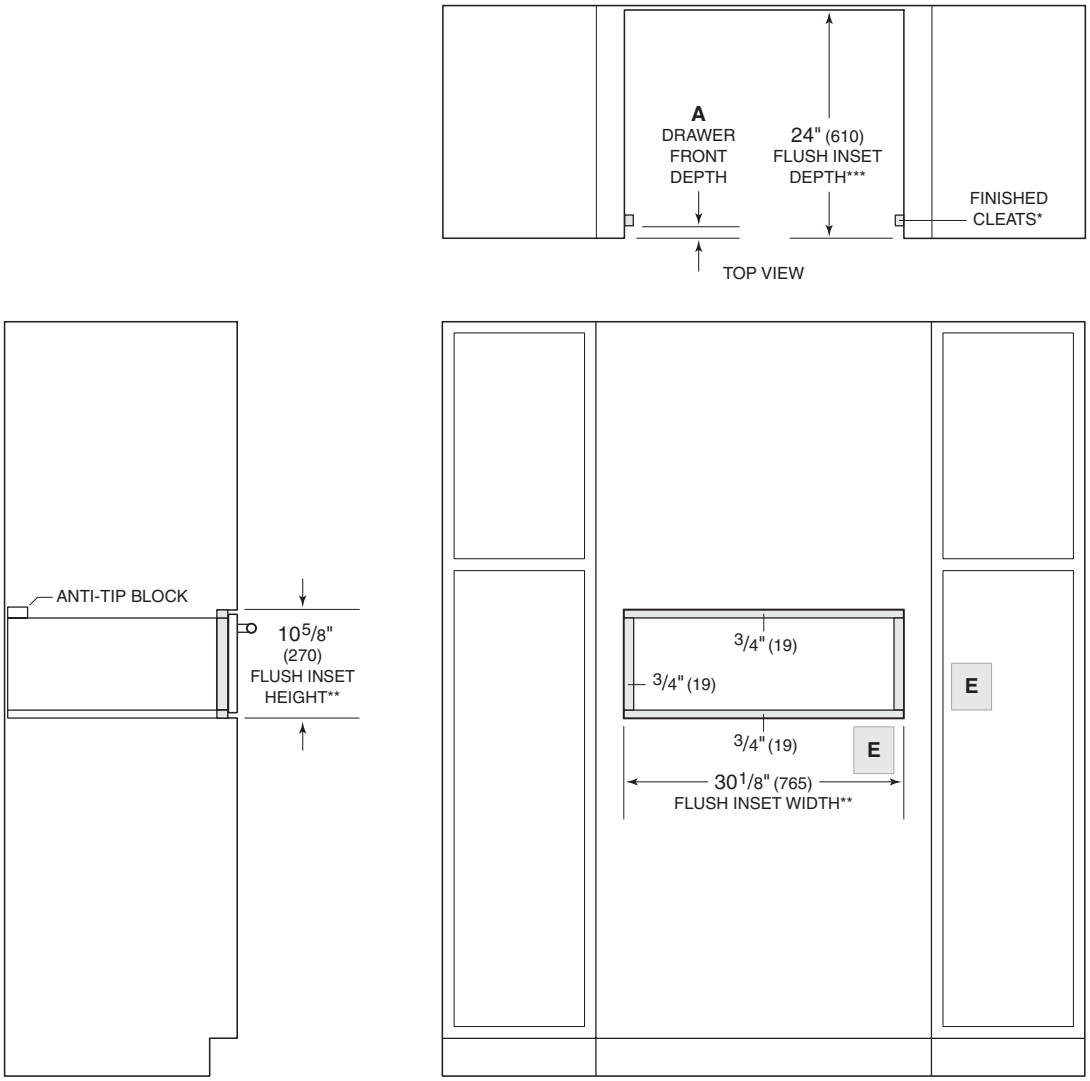

**Will be visible and should be finished to match cabinetry.*
***Dimension provides minimum reveals.*
****24 1/8" (613) for E series contemporary drawer front.*

NOTE: Location of electrical supply within opening may require additional cabinet depth.

DRAWER FRONT DEPTH (A)	M SERIES	E SERIES
Transitional/Professional	7/8" (22)	1 1/8" (29)
Professional (2" thick)	NA	2 1/8" (54)
Contemporary Stainless	7/8" (22)	NA
Contemporary Black	1" (25)	1 3/8" (35)

Custom front panel depth is dependent on panel thickness. Add 1/4" (6) to the panel thickness to determine the drawer front depth.

Induction Cooktops

Almost instantaneous temperature response. Practically no wasted heat. Induction cooking has been popular among European chefs and homeowners for decades. Now Wolf leads the way in bringing this remarkable technology to North American kitchens. Its secret is magnetism. Electromagnetic elements cause iron and magnetic stainless cookware to heat up instantly and with perfectly distributed heat. Heat generation stops the instant you turn off the element or remove the pan. The cooktop's surface remains cool. Your kitchen stays cooler too.

Transitional models have a brushed stainless steel trim. Contemporary models can be mounted flush with the countertop. The following models have the same stainless steel frame as our module cooktops for paired installations: CI243TF/S, CI304TF/S, and CI365TF/S.

INDUCTION COOKTOPS

TRANSITIONAL FRAMED

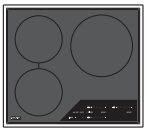
CI243TF/S

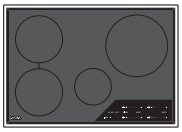
CI304TF/S

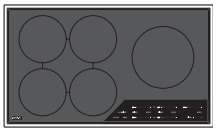
CI365TF/S

TRANSITIONAL

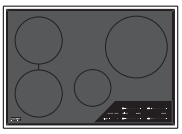
CI304T/S

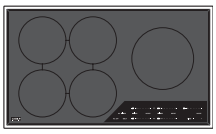
CI365T/S

CONTEMPORARY

CI243C/B

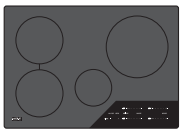
CI304C/B

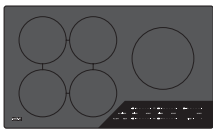
CI365C/B

Induction Cooktops

24" TRANSITIONAL

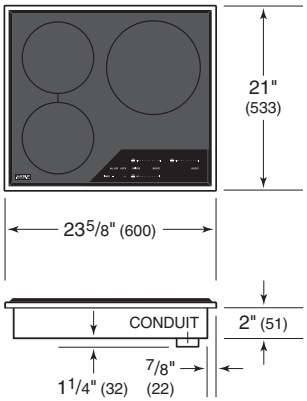

30" TRANSITIONAL

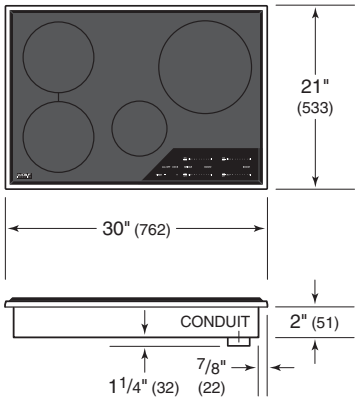

36" TRANSITIONAL

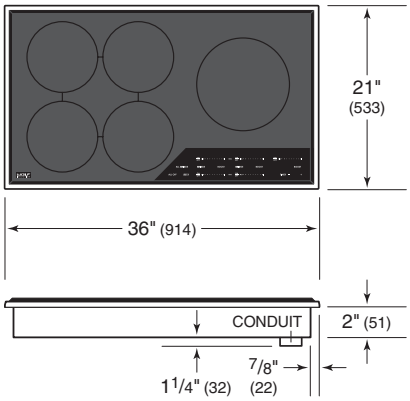

24" CONTEMPORARY

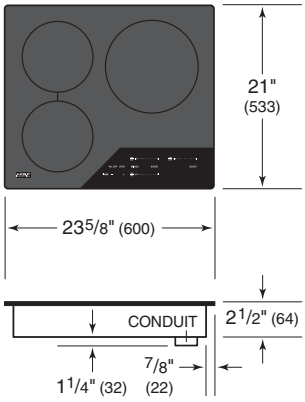

30" CONTEMPORARY

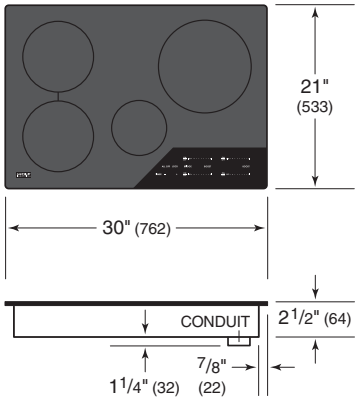

36" CONTEMPORARY

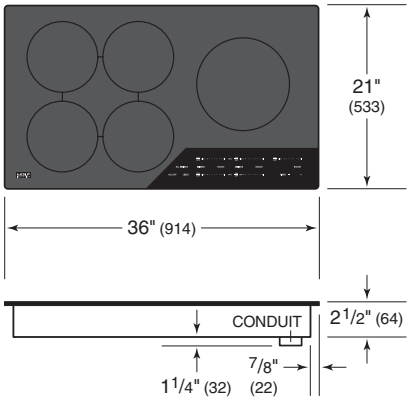

ELEMENT RATING

24" COOKTOP	W
11" (279)	2600/3150 boost
8" (203)	2100/3000 boost
8" (203)	2100

30" COOKTOP	W
11" (279)	2600/3150 boost
8" (203)	2100/3000 boost
8" (203)	2100
6" (152)	1400

36" COOKTOP	W
11" (279)	2600/3700 boost
(2) 8" (203)	2100/3000 boost
(2) 8" (203)	2100

Electric Cooktops

New generation electric cooktops use high-frequency pulsation technology for the most exceptional performance and control ever in a Wolf electric cooktop, with blazing hot sears at the high end and steady simmers and melts at the low end—a low-end finesse that is unusual in an electric cooktop. The updated element configuration accommodates a wide variety of cooking vessels and dish preparation.

ELECTRIC COOKTOPS

TRANSITIONAL

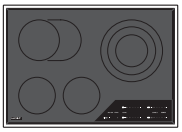

CE304T/S

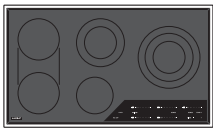

CE365T/S

CONTEMPORARY

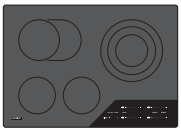

CE304C/B

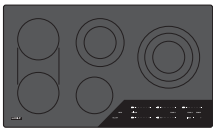

CE365C/B

Electric Cooktops

30" TRANSITIONAL

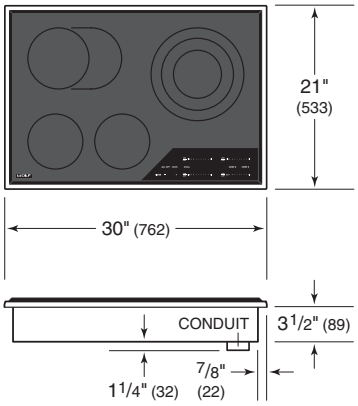

36" TRANSITIONAL

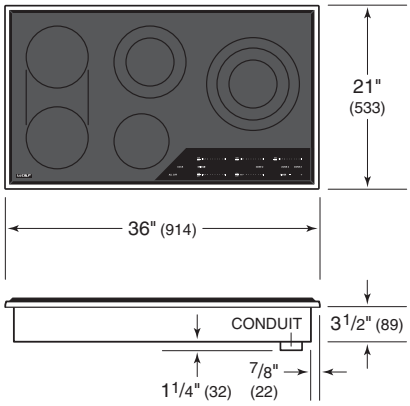

30" CONTEMPORARY

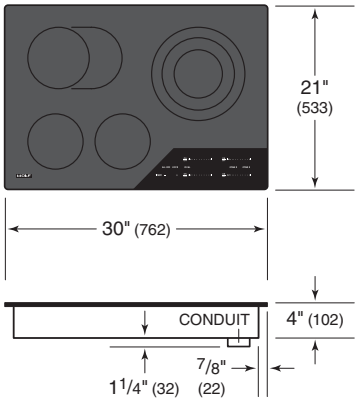

36" CONTEMPORARY

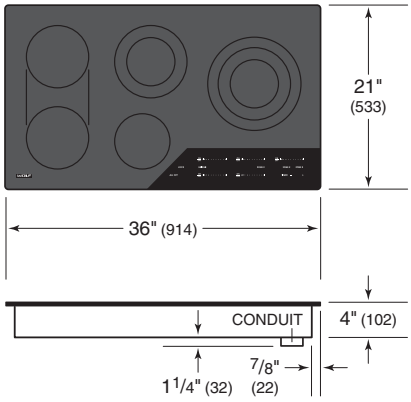

ELEMENT RATING

30" COOKTOP	W
10 1/2" (267) Triple	1050/1950/2700
(2) 5 1/2" (140) Singles	1200
6 1/2" (165) Single with Oval	2400

36" COOKTOP	W
10 1/2" (267) Triple	1050/1950/2700
8" (203) Dual	700/2200
5 1/2" (140) Single	1200
(2) 7" (178) Singles with Bridge	4400

Planning Information

A minimum 2" (51) is required from the bottom of the cooktop to combustible materials.

Contemporary induction and electric cooktops can be mounted flush with the top of the countertop, or as a frameless standard installation sitting on top of the countertop surface. If the cooktop is to be mounted flush with the countertop, a recessed area surrounding the cooktop cutout must be provided.

IMPORTANT NOTE: Flush mount installations are intended for granite, solid surface, or stone countertop surfaces only.

ELECTRICAL REQUIREMENTS

Installation must comply with all applicable electrical codes.

Locate the electrical supply as shown in the illustrations on the following pages. A separate circuit servicing only this appliance is required.

ELECTRICAL REQUIREMENTS

INDUCTION	
Electrical Supply	grounded 3-wire, 240/208 VAC, 60 Hz
Conduit	flexible 4' (1.2 m)
ELECTRIC	
Electrical Supply	grounded 3-wire, 240 VAC, 60 Hz
Electrical Supply (208 V)	grounded 3-wire, 208 VAC, 60 Hz
Conduit	flexible 4' (1.2 m)
SERVICE	
24" Induction	30 amp dedicated circuit
30" Induction/Electric	40 amp dedicated circuit
36" Induction/Electric	50 amp dedicated circuit

24" / 30" / 36" Cooktop

STANDARD INSTALLATION

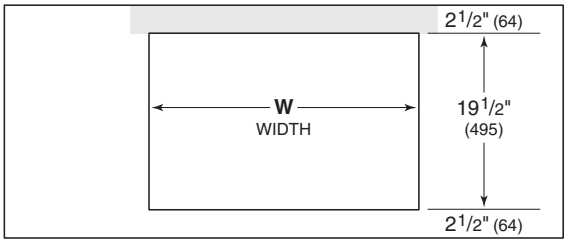

COUNTERTOP CUTOUT

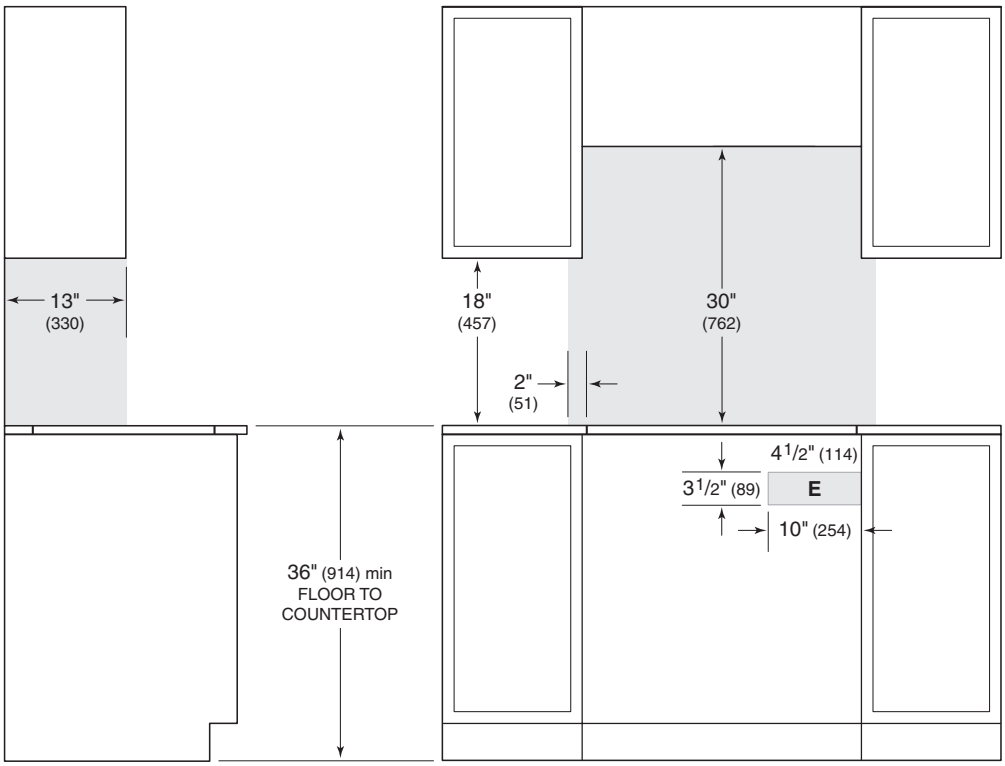

SIDE VIEW FRONT VIEW

NOTE: Shaded area above countertop indicates minimum clearance to combustible surfaces, combustible materials cannot be located within this area.
Electrical supply location only applies to installations with built-in oven.

CUTOUT WIDTH	W
24" Induction	22 1/8" (562)
30" Induction/Electric	29" (737)
36" Induction/Electric	35" (889)

24" / 30" / 36" Cooktop

FLUSH INSTALLATION

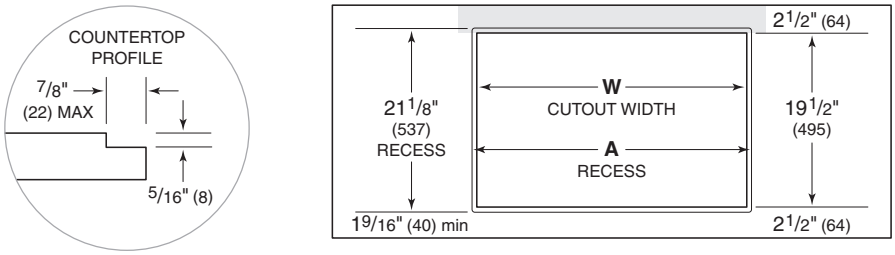

COUNTERTOP CUTOUT

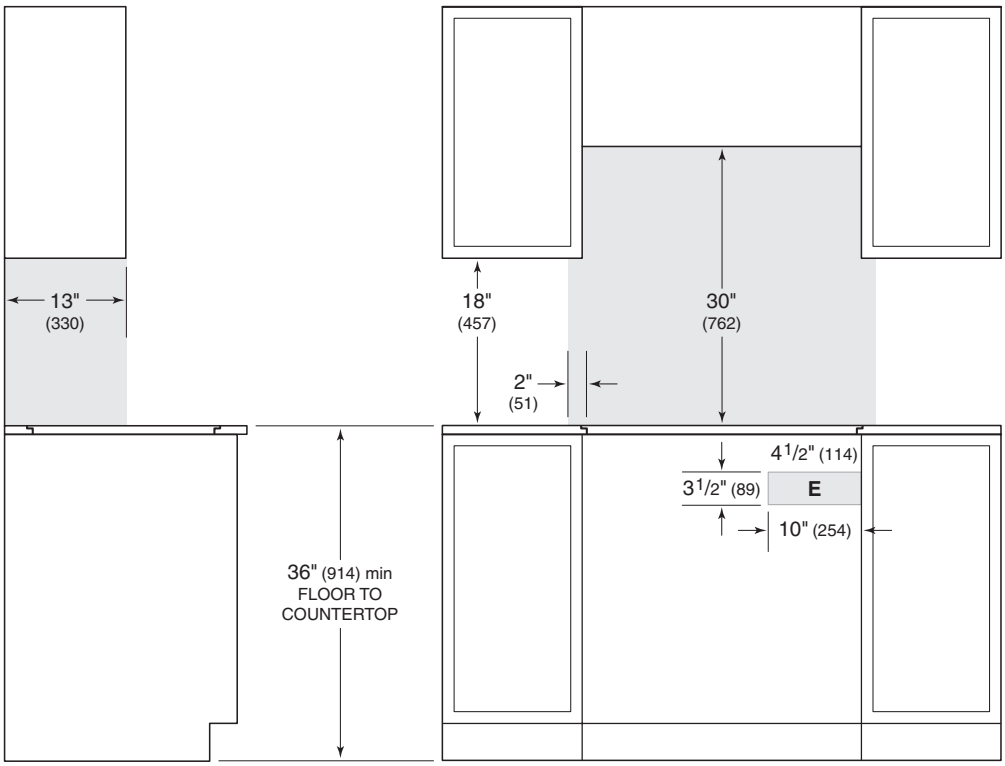

SIDE VIEW FRONT VIEW

NOTE: Shaded area above countertop indicates minimum clearance to combustible surfaces, combustible materials cannot be located within this area.
Electrical supply location only applies to installations with built-in oven.
Outside corner radius 7/16" (11).

CUTOUT WIDTH	W	A
24" Induction	22 1/8" (562)	23 3/4" (603)
30" Induction/Electric	29" (737)	30 1/8" (765)
36" Induction/Electric	35" (889)	36 1/8" (918)

WOLF

Gas Cooktops

Like their oven counterparts, the new generation of Wolf gas cooktops features three new looks—transitional, professional, and contemporary. New performance enhancements make delicious results even more of a certainty than ever. Multiple sizes, choice of knob colors, and distinctly different grates—the new gas cooktops offer exceptional design flexibility. For a striking, low-profile look, the contemporary gas cooktop fits flush to the countertop with front-mounted controls that integrate directly into cabinetry below.

Model CG243TF/S has the same stainless steel frame as our module cooktops for paired installations.

GAS COOKTOPS

TRANSITIONAL FRAMED

CG243TF/S

TRANSITIONAL

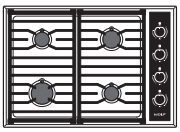

CG304T/S

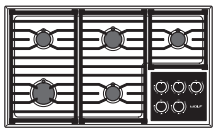

CG365T/S

PROFESSIONAL

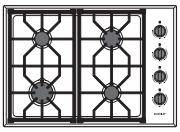

CG304P/S

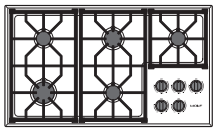

CG365P/S

CONTEMPORARY

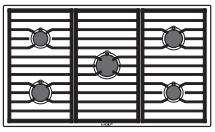

CG365C/S

Gas Cooktops

24" TRANSITIONAL

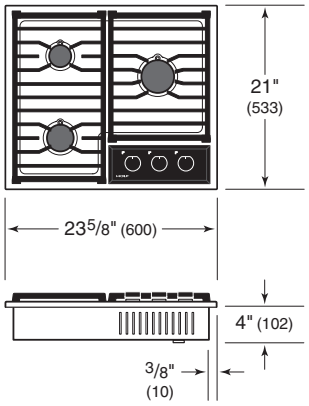

30" TRANSITIONAL

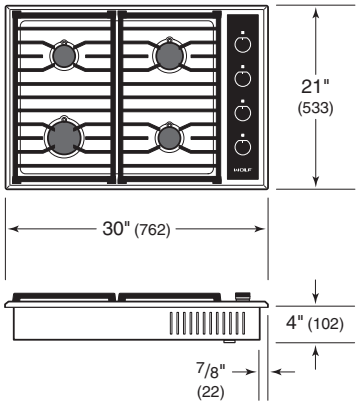

36" TRANSITIONAL

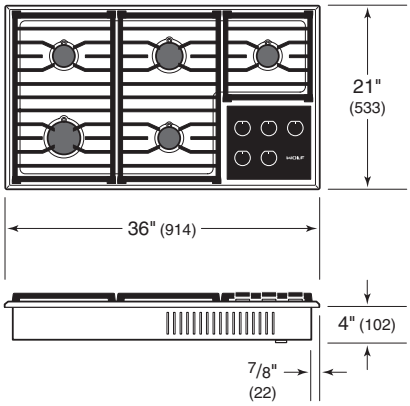

30" PROFESSIONAL

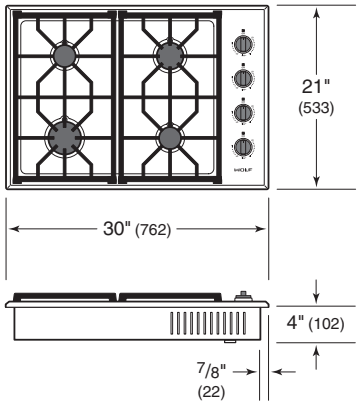

36" PROFESSIONAL

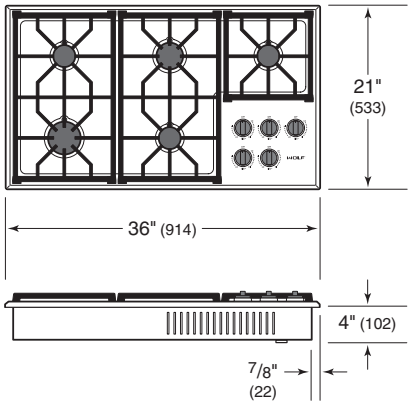

36" CONTEMPORARY

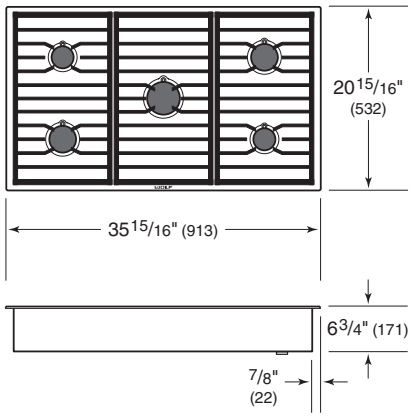

Gas Cooktops

BURNER RATING—BTU (kW)		
24" TRANSITIONAL	**SIM**	**HI**
18K Burner	300 (.1)	18,000 (5.3)
12K Burner	300 (.1)	12,000 (3.5)
9.2K Burner	300 (.1)	9,200 (2.7)
30" TRANSITIONAL/PROFESSIONAL	**SIM**	**HI**
18K Burner	300 (.1)	18,000 (5.3)
12K Burner	300 (.1)	12,000 (3.5)
9.2K Burner (2)	300 (.1)	9,200 (2.7)
36" TRANSITIONAL/PROFESSIONAL	**SIM**	**HI**
18K Burner	300 (.1)	18,000 (5.3)
12K Burner	300 (.1)	12,000 (3.5)
9.2K Burner (3)	300 (.1)	9,200 (2.7)
36" CONTEMPORARY	**SIM**	**HI**
20K Burner	300 (.1)	20,000 (5.9)
12K Burner (2)	300 (.1)	12,000 (3.5)
9.2K Burner (2)	300 (.1)	9,200 (2.7)

Planning Information

A minimum 2" (51) is required from the bottom of the cooktop to combustible materials. If the cooktop is installed above an oven, a minimum of 1/4" (6) is required between the units.

The contemporary gas cooktop can be mounted flush with the top of the countertop, or as a standard installation sitting on top of the countertop surface. If the cooktop is to be mounted flush with the countertop, a recessed area surrounding the cooktop cutout must be provided. The countertop must be able to withstand temperatures up to 300°F (149°C).

Control knobs for the contemporary gas cooktop are designed to be mounted on the front face of cabinetry below the unit. Mounting holes must be drilled through the cabinet face. Refer to the illustrations on pages 78–79 for the hole location.

Planning Information

ELECTRICAL REQUIREMENTS

Installation must comply with all applicable electrical codes.

Locate the electrical supply as shown in the illustrations on the following pages. A separate circuit servicing only this appliance is required. A ground fault circuit interrupter (GFCI) is not recommended and may cause interruption of operation.

ELECTRICAL REQUIREMENTS	
Electrical Supply	grounded, 120 VAC, 60 Hz
Service	15 amp dedicated circuit
Receptacle	3-prong grounding-type
Power Cord	6' (1.8 m)

GAS SUPPLY

Installation must comply with all applicable gas codes.

If local codes permit, a certified, 3' (.9 m) long, 1/2" (13) or 3/4" (19) ID flexible metal appliance connector is recommended.

Wolf natural gas cooktops will function up to 10,250' (3124 m) in altitude without adjustment and LP gas cooktops will function up to 8,600' (2621 m). If the installation exceeds these elevations, contact an authorized Wolf dealer for a high altitude conversion kit.

GAS REQUIREMENTS	
Gas Supply	3/4" ID line
Gas Inlet	1/2" NPT male
NATURAL GAS	**WC**
Supply Pressure	5" (12.5 mb)
Min Line Pressure	7" (17.5 mb)
Max Regulator Pressure	14" (34.9 mb), .5 psi (3.5 kPa)
LP GAS	**WC**
Supply Pressure	10" (25 mb)
Min Line Pressure	11" (27.4 mb)
Max Regulator Pressure	14" (34.9 mb), .5 psi (3.5 kPa)

24" / 30" / 36" Transitional / Professional Gas Cooktop

STANDARD INSTALLATION

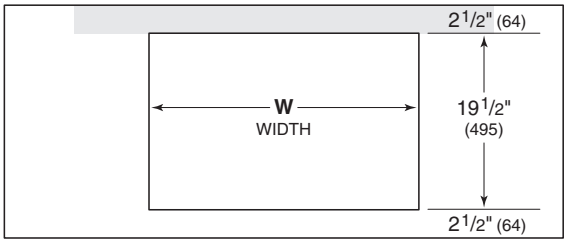

COUNTERTOP CUTOUT

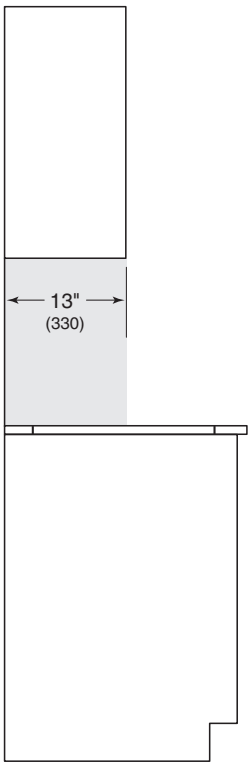

SIDE VIEW

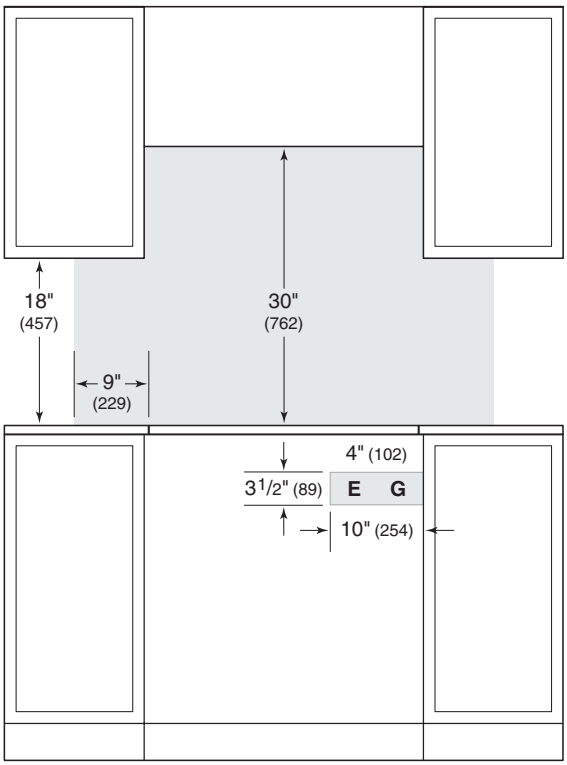

FRONT VIEW

NOTE: Shaded area above countertop indicates minimum clearance to combustible surfaces, combustible materials cannot be located within this area.
Electrical and gas supply location only applies to installations with built-in oven.

CUTOUT WIDTH	W
24" Transitional	23" (584)
30" Transitional/Professional	29" (737)
36" Transitional/Professional	35" (889)

36" Contemporary Gas Cooktop

STANDARD INSTALLATION

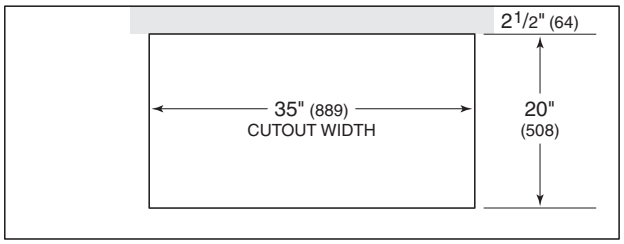

COUNTERTOP CUTOUT

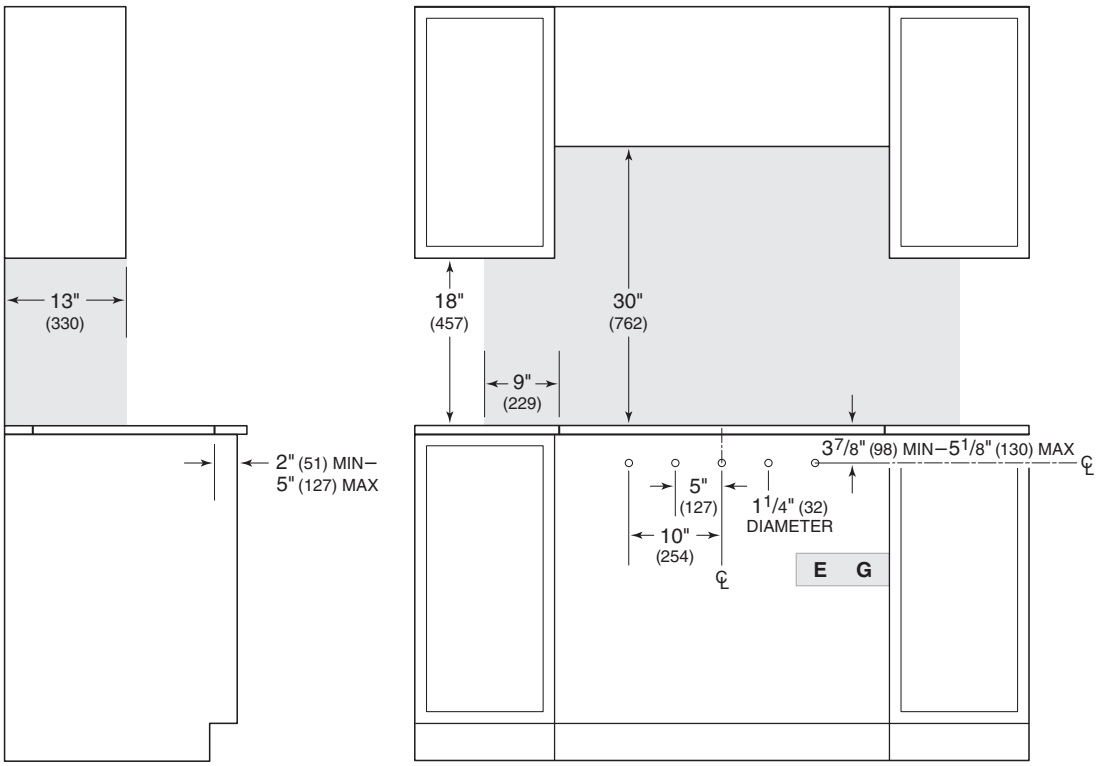

SIDE VIEW

FRONT VIEW

NOTE: Shaded area above countertop indicates minimum clearance to combustible surfaces, combustible materials cannot be located within this area.
Maximum facade thickness 1" (25). 1" (25) thickness extends 17" (432) left and right and 2" (51) above and below centerlines.

36" Contemporary Gas Cooktop

FLUSH INSTALLATION

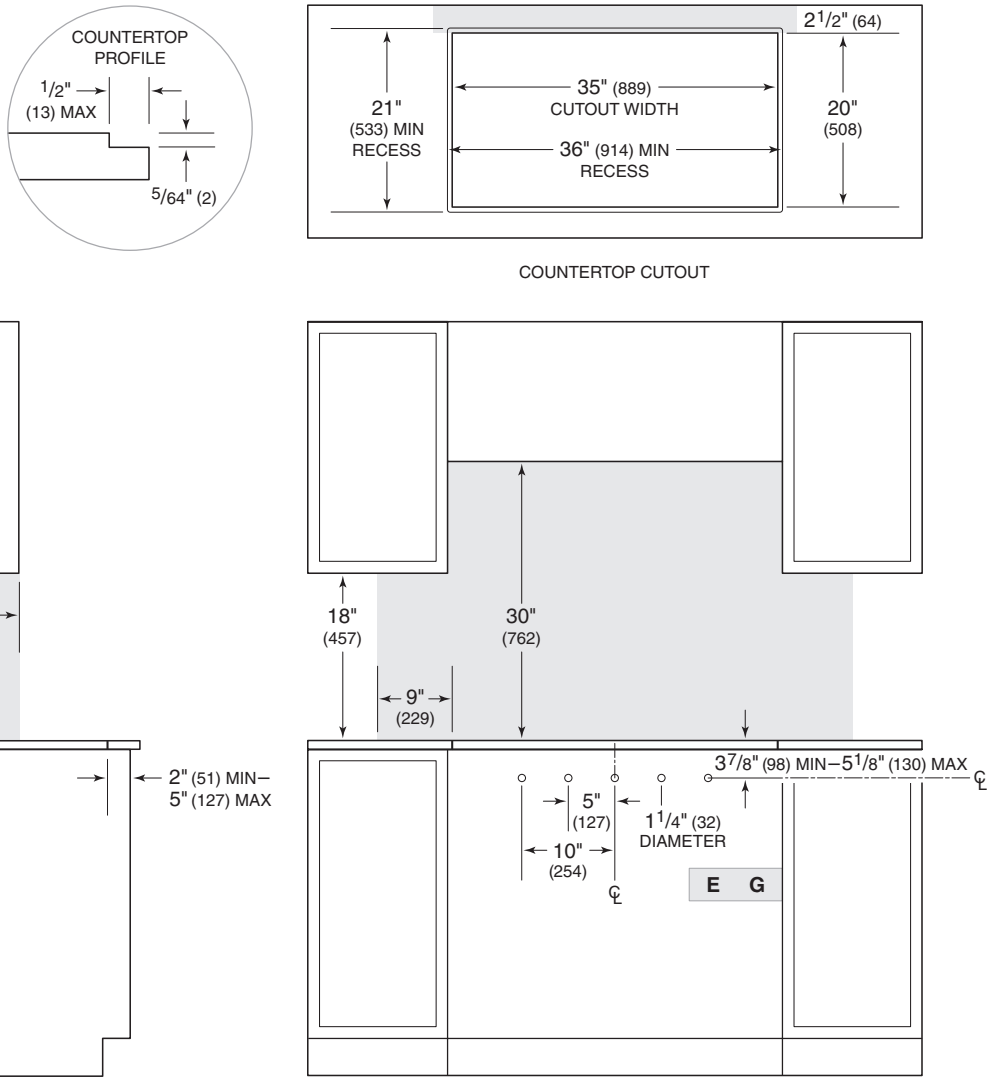

NOTE: Shaded area above countertop indicates minimum clearance to combustible surfaces, combustible materials cannot be located within this area.
Maximum facade thickness 1" (25). 1" (25) thickness extends 17" (432) left and right and 2" (51) above and below centerlines.
Outside corner radius 3/8" (10).

WOLF
WOLF

Module Cooktops

Wolf modules have been redesigned to match the updated lines of Sub-Zero and Wolf. Controls, grates, and trim allow them to integrate perfectly with their larger counterparts and deliver equal performance. Combine modules à la carte-style to create a custom cooktop, or add specialty functions alongside an existing cooktop.

Full-size cooktops including CI243TF/S, CG243TF/S, CI304TF/S, and CI365TF/S feature the same brushed stainless frame, making them ideal for pairing with modules.

MODULE COOKTOPS

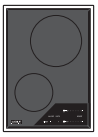

CI152TF/S
INDUCTION

CE152TF/S
ELECTRIC

SM15TF/S
STEAMER

FM15TF/S
FRYER

GM15TF/S
GRILL

TM15TF/S
TEPPANYAKI

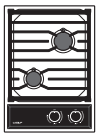

CG152TF/S
GAS

MM15TF/S
MULTI-
FUNCTION

Module Cooktops

INDUCTION

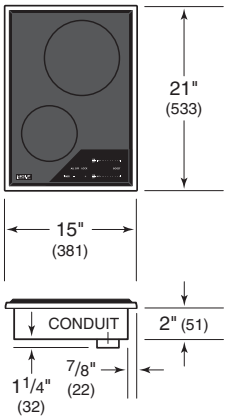

ELECTRIC

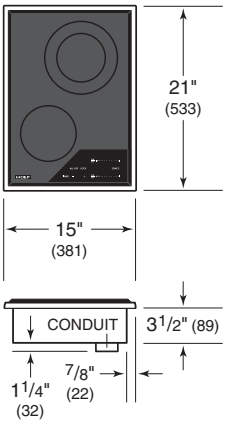

STEAMER

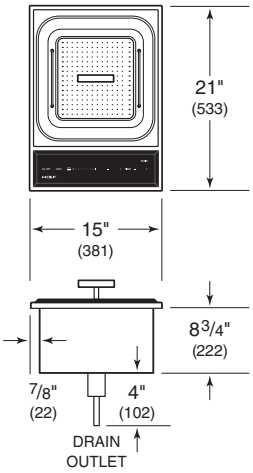

FRYER

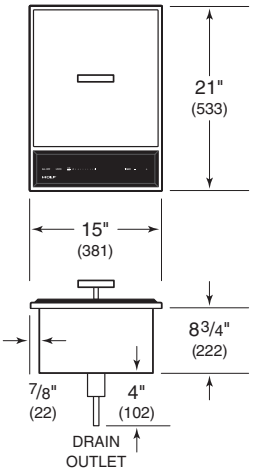

GRILL

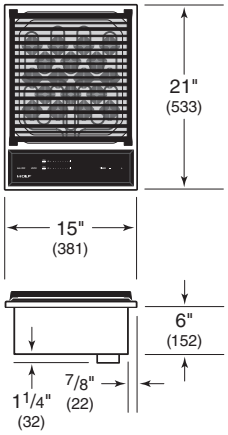

TEPPANYAKI

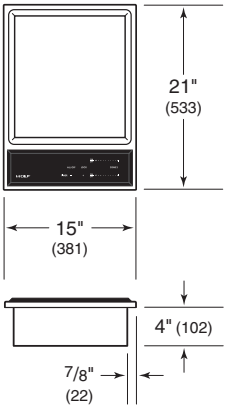

GAS

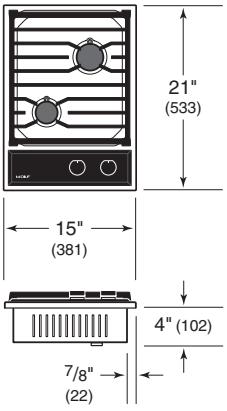

MULTIFUNCTION

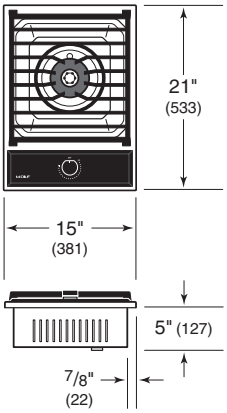

Planning Information

IMPORTANT NOTE: Wolf does not recommend the use of downdraft ventilation with the steamer, fryer, or grill modules.

A minimum 2" (51) is required from the bottom of the module to combustible materials. For the teppanyaki module, a minimum 7/8" (22) is required from the bottom of the unit to any material.

Refer to the illustrations on the following pages for installation of modules.

MULTIPLE COOKTOPS

When multiple cooktops or modules are installed side by side, refer to the chart and illustration below for typical configurations. The cutout dimensions provided will accommodate the use of an optional filler strip if desired.

For specific multiple cooktop and module configuration options or the installation of more than six modules, contact Wolf Customer Care at 800-222-7820.

COUNTERTOP CUTOUT	W
(2) 15" Modules*	29" (737)
(3) 15" Modules*	44" (1118)
(4) 15" Modules*	59 1/4" (1505)
(5) 15" Modules*	74 1/4" (1886)
(6) 15" Modules*	89 1/4" (2267)
24" Cooktop**/15" Module*	37 5/8" (956)
30" Cooktop/15" Module*	44" (1118)
30" Cooktop/(2) 15" Modules*	59" (1473)
36" Cooktop/15" Module*	50" (1270)

**Dimensions apply to CI152TF/S, CE152TF/S, CG152TF/S, SM15TF/S, FM15TF/S, GM15TF/S, TM15TF/S and MM15TF/S.*

***23 5/8" actual product width.*

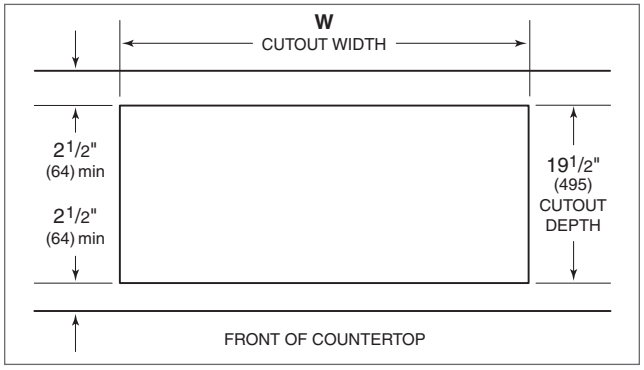

Countertop cutout

Planning Information

ELECTRICAL

Installation must comply with all applicable electrical codes.

Locate the electrical supply as shown in the illustrations on the following pages. A separate circuit servicing only this appliance is required.

When multiple cooktops or modules are installed side by side, each must have its own separate electrical supply.

ELECTRICAL REQUIREMENTS

ELECTRIC MODULES	
Electrical Supply	grounded 3-wire, 240/208 VAC, 50/60 Hz
Steamer, Fryer, Grill, Teppanyaki	15 amp dedicated circuit
Induction, Electric	20 amp dedicated circuit
Conduit	flexible 4' (1.2 m)
GAS MODULES	
Electrical Supply	grounded, 120 VAC, 50/60 Hz
Service	15 amp dedicated circuit
Receptacle	3-prong grounding-type
Power Cord	6' (1.8 m)

DRAIN OUTLET

Steamer and fryer modules require a method for draining hot water and oil. For the steamer module, options include connecting a drain hose from the 5/8" (16) outlet tied into an existing drain, a separate drain with freefall, or placing a heat-resistant receptacle under the drain outlet. For the fryer module, the drain outlet must be accessible to drain oil into a heat-resistant receptacle.

GAS SUPPLY

Installation must comply with all applicable gas codes.

If local codes permit, a certified, 3' (.9 m) long, 1/2" (13) or 3/4" (19) ID flexible metal appliance connector is recommended.

When multiple gas cooktops or modules are installed side by side, they can receive their gas supply from a common line. However, each unit must have its own regulator installed between the mainline and the cooktop or module.

Wolf natural gas cooktops will function up to 10,250' (3124 m) in altitude without adjustment and LP gas cooktops will function up to 8,600' (2621 m). If the installation exceeds these elevations, contact an authorized Wolf dealer for a high altitude conversion kit.

GAS REQUIREMENTS

Gas Supply	3/4" ID line
Gas Inlet	1/2" NPT male
NATURAL GAS	**WC**
Supply Pressure	5" (12.5 mb)
Min Line Pressure	7" (17.5 mb)
Max Regulator Pressure	14" (34.9 mb), .5 psi (3.5 kPa)
LP GAS	**WC**
Supply Pressure	10" (25 mb)
Min Line Pressure	11" (27.4 mb)
Max Regulator Pressure	14" (34.9 mb), .5 psi (3.5 kPa)

Induction / Electric Module

STANDARD INSTALLATION

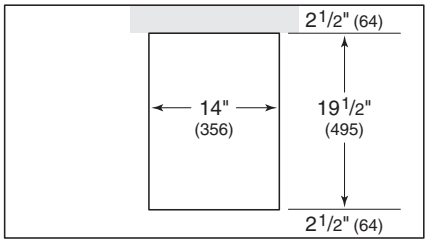

COUNTERTOP CUTOUT

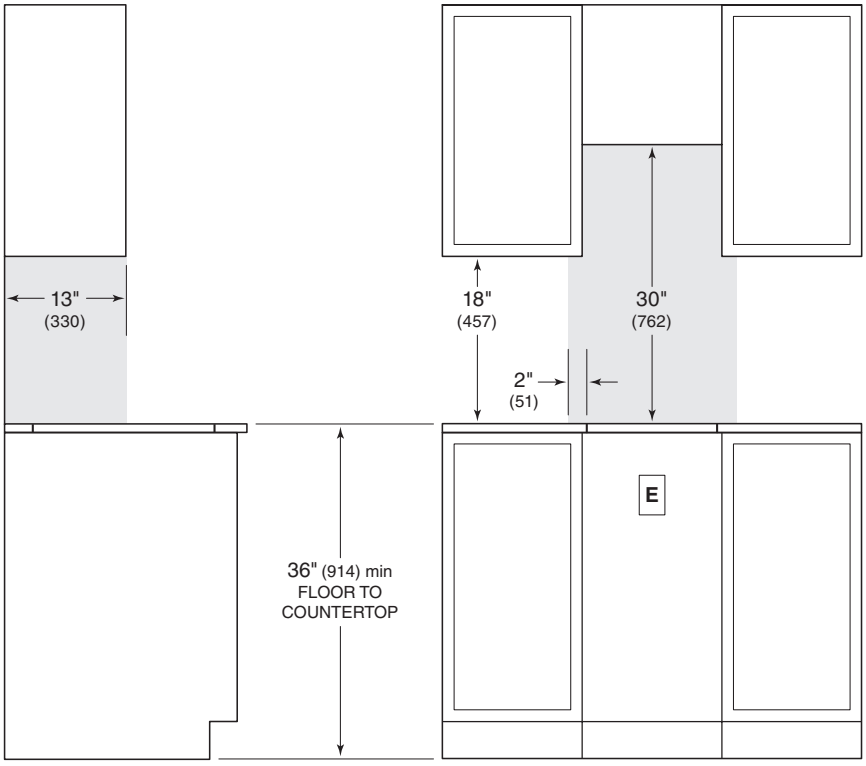

SIDE VIEW FRONT VIEW

NOTE: Shaded area above countertop indicates minimum clearance to combustible surfaces, combustible materials cannot be located within this area.

Steamer Module

STANDARD INSTALLATION

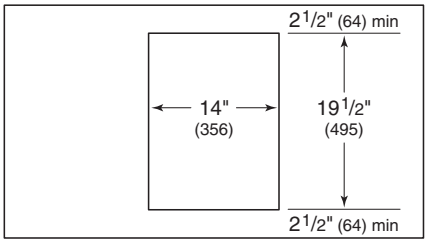

COUNTERTOP CUTOUT

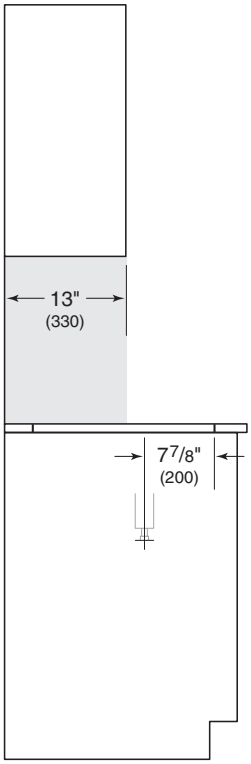

SIDE VIEW

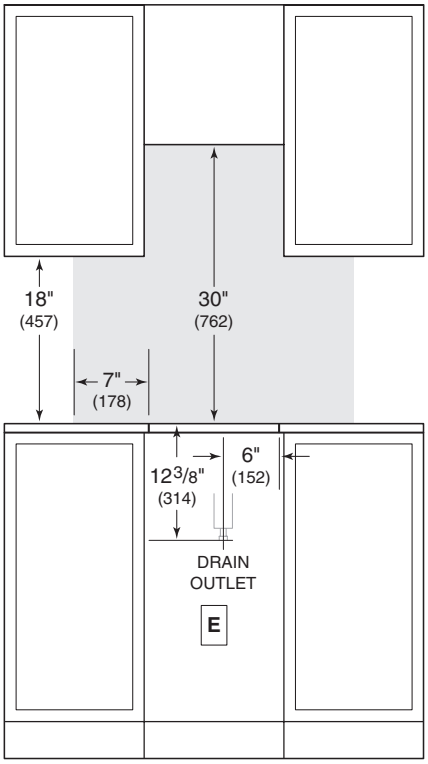

FRONT VIEW

NOTE: Shaded area above countertop indicates minimum clearance to combustible surfaces, combustible materials cannot be located within this area.

⚠ WARNING

The steamer module must be installed at least 15" (381) from a fryer module.

Fryer Module

STANDARD INSTALLATION

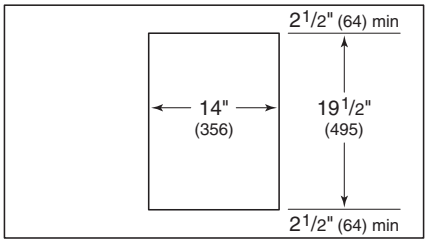

COUNTERTOP CUTOUT

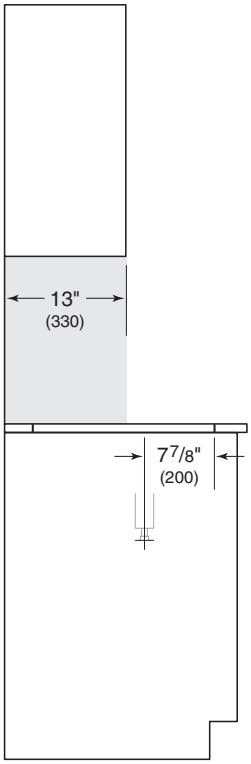

SIDE VIEW

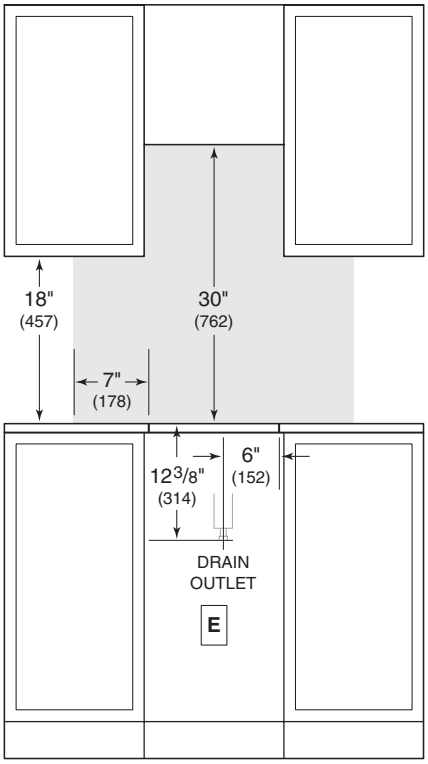

FRONT VIEW

NOTE: Shaded area above countertop indicates minimum clearance to combustible surfaces, combustible materials cannot be located within this area.

⚠ WARNING

The fryer module must be installed at least 15" (381) from any open-flame cooking device or a steamer module.

Grill / Teppanyaki Module

STANDARD INSTALLATION

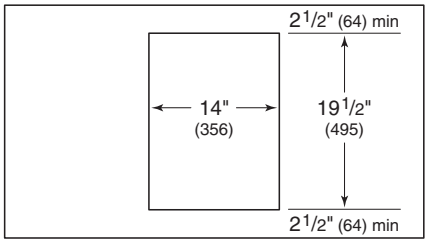

COUNTERTOP CUTOUT

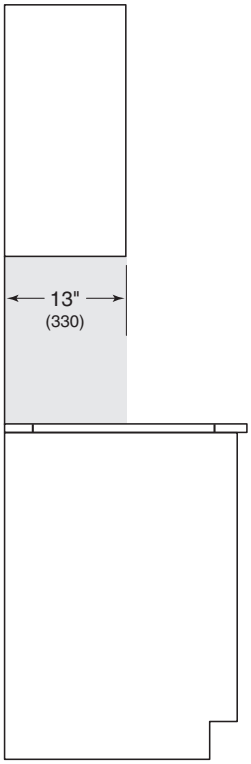

SIDE VIEW

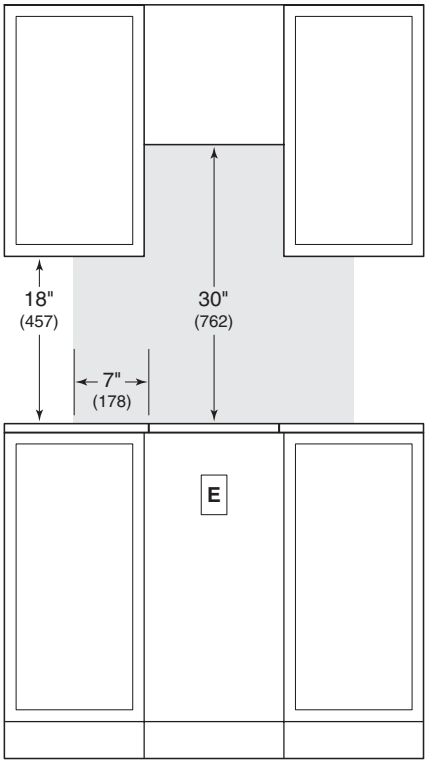

FRONT VIEW

NOTE: Shaded area above countertop indicates minimum clearance to combustible surfaces, combustible materials cannot be located within this area.

Gas / Multifunction Module

STANDARD INSTALLATION

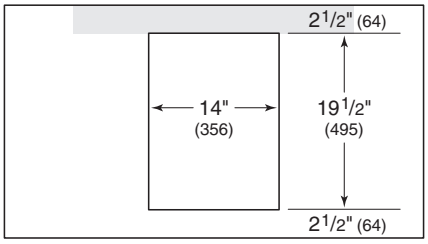

COUNTERTOP CUTOUT

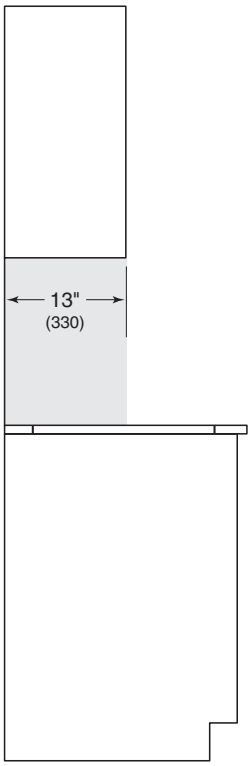

SIDE VIEW

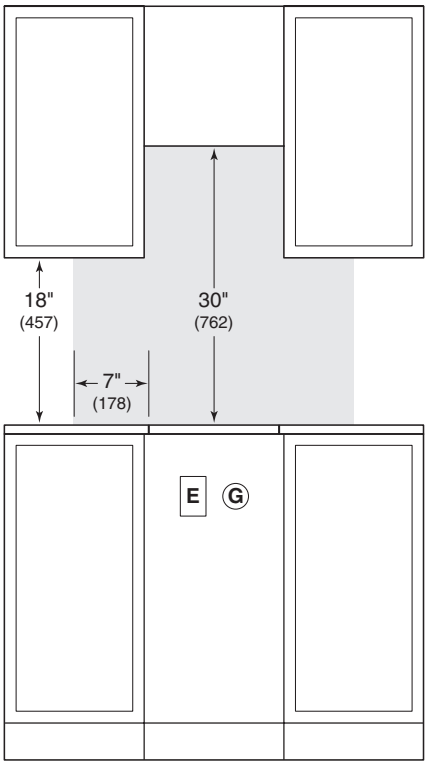

FRONT VIEW

NOTE: Shaded area above countertop indicates minimum clearance to combustible surfaces, combustible materials cannot be located within this area.

SHORT COFFEE
Standard
WOLF
0H28
WOLF

Coffee Systems

Make professional-quality coffee, espresso, cappuccino, latte, and more. The Wolf coffee system automatically steams and foams the milk perfectly. The water temperature and brew strength are adjustable. It uses either whole-bean or ground coffee. The design pairs beautifully, either side-by-side or in a tower application, with other Wolf products such as the convection steam oven. Coffee systems can be installed in a standard or flush inset application. All 30" trim options are based on model EC24/B.

COFFEE SYSTEMS

24" MODELS

EC24/B

EC24/S

TRANSITIONAL

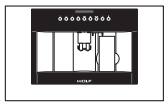

30" M SERIES TRIM

30" E SERIES TRIM

PROFESSIONAL

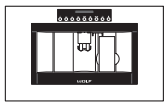

30" M SERIES TRIM

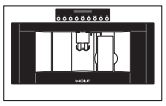

30" E SERIES TRIM

CONTEMPORARY

30" M/E SERIES TRIM

Coffee System

DIMENSIONS

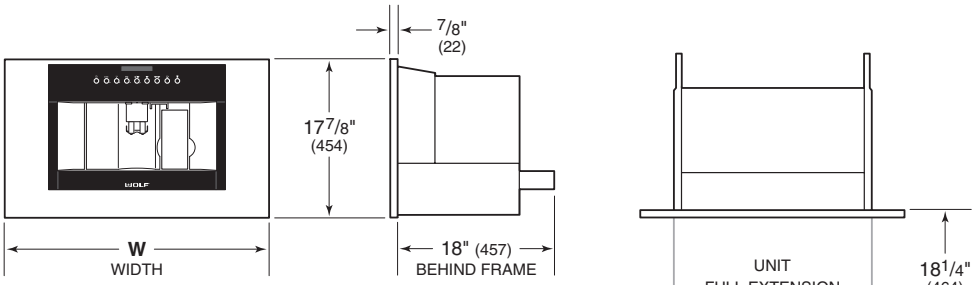

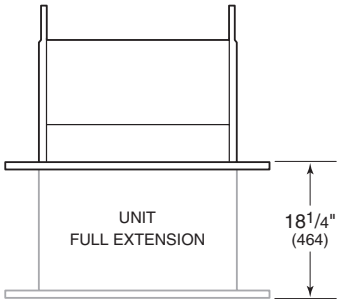

WIDTH	W
24" Model	23 1/2" (597)
30" Trim	29 7/8" (759)

Planning Information

The coffee system can be installed in a standard or flush inset application. All 30" trim options are based on model EC24/B. The sides of the cabinetry opening must be adequate to support installation of the mounting slides. Refer to the illustration below.

Finish the edges of the opening. They may be visible when the unit is slid forward.

For standard installations, the face trim will overlap stiles and rails. Refer to the chart below.

For flush inset installations, a minimum 1/8" (3) reveal is required on all sides. To ensure consistent reveals, each corner of the opening must be exactly 90°.

INSTALLATION REQUIREMENTS

BASE SUPPORT		MIN
Coffee System		100 lb (45 kg)
TRIM OVERLAP	**24" MODEL**	**30" TRIM**
Top	3/16" (5)	3/16" (5)
Bottom	0" (0)	0" (0)
Sides	11/16" (18)	37/8" (98)

COMBINATION INSTALLATION

To install a coffee system above a cup warming drawer, one opening for both units must be specified. To achieve the minimum reveal between the units, place the coffee system support rails on top of the cup warming drawer, then secure the rails to the sides of the cabinet. Any material between the units will increase the horizontal reveal.

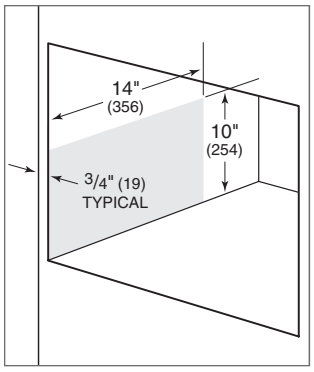

Side support

ELECTRICAL REQUIREMENTS

Installation must comply with all applicable electrical codes.

Locate the electrical supply as shown in the illustrations on the following pages. A separate circuit servicing only this appliance is required. A ground fault circuit interrupter (GFCI) is not recommended and may cause interruption of operation.

ELECTRICAL REQUIREMENTS

Electrical Supply	grounded, 120 VAC, 60 Hz
Service	15 amp dedicated circuit
Receptacle	3-prong grounding-type
Power Cord	6' (1.8 m)

Coffee System

STANDARD INSTALLATION

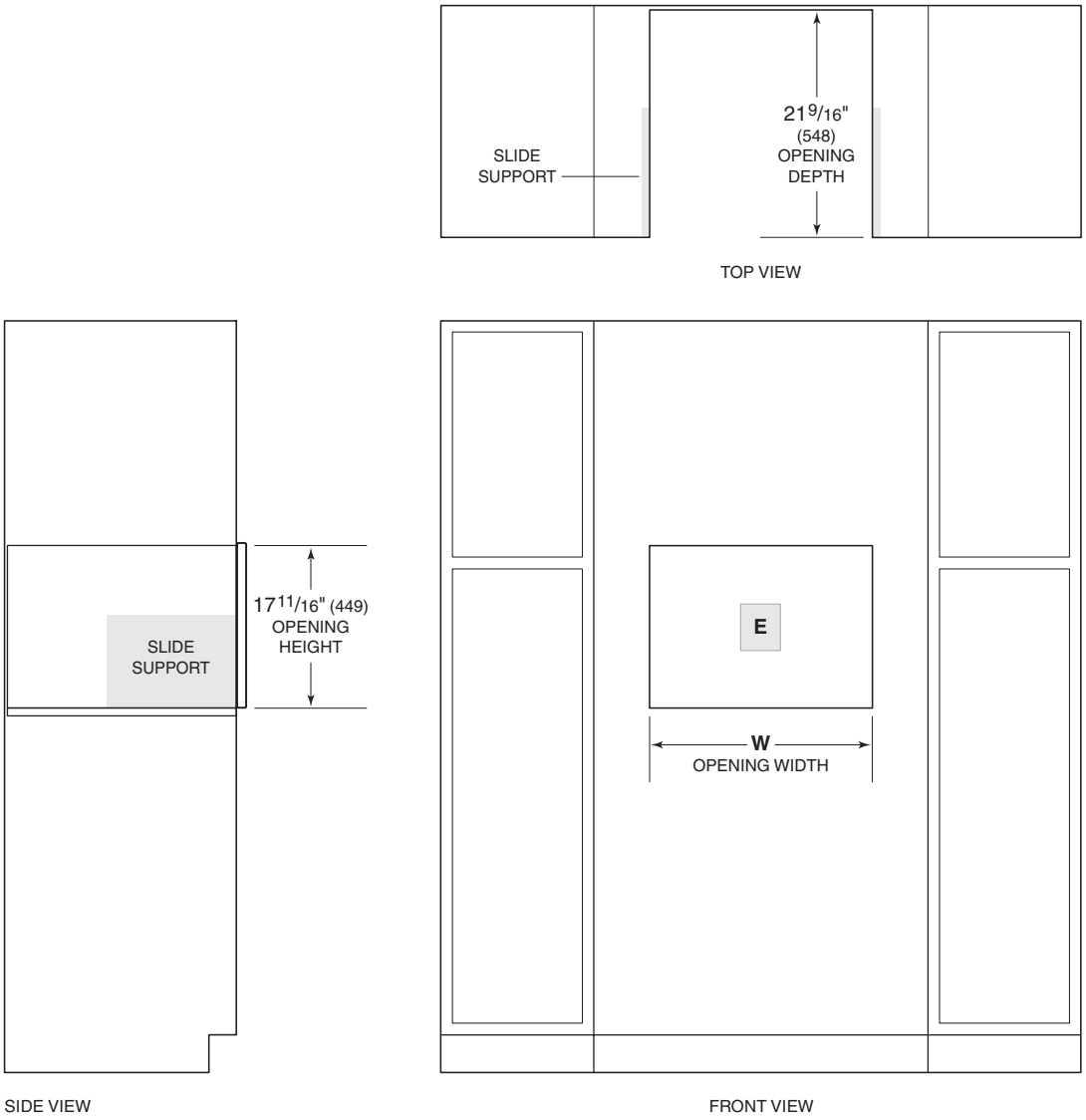

NOTE: 24" (610) model and model with 30" (762) trim require the same opening dimensions.

OPENING WIDTH	W
24" Model	22 1/8" (562)
30" Trim	22 1/8" (562)

Coffee System

FLUSH INSET INSTALLATION

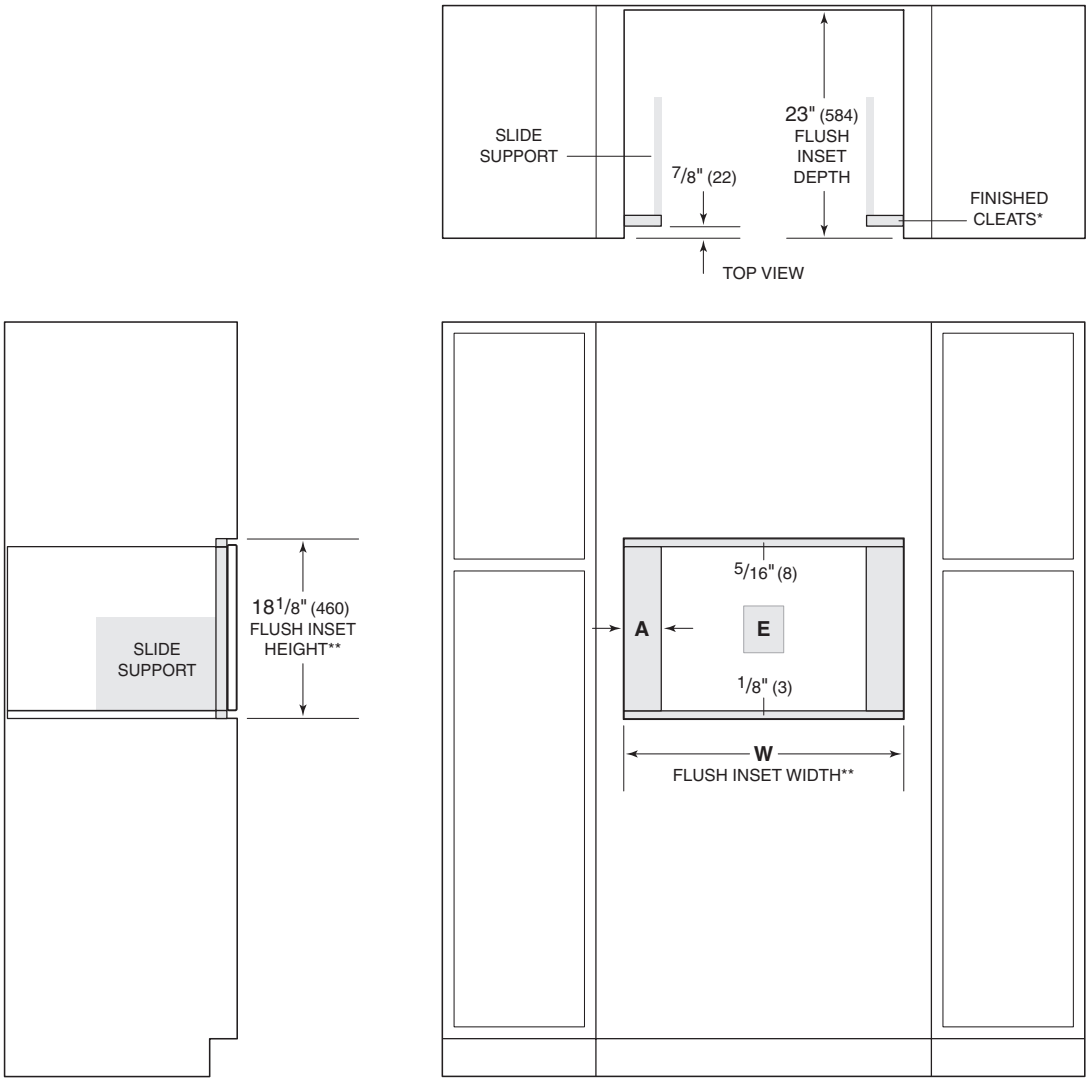

**Will be visible and should be finished to match cabinetry.*
***Dimension provides minimum reveals.*

FLUSH INSET WIDTH	W	A
24" Model	23 3/4" (603)	13/16" (21)
30" Trim	30 1/8" (765)	4" (102)

Cup Warming Drawers

Wolf cup warming drawers preheat cups so hot beverages stay hot longer. The temperature is adjustable. Two model options match the look of Wolf stainless and black coffee systems. The cup warming drawer can be installed in a standard or flush inset application.

CUP WARMING DRAWERS

CW24/S
Stainless

CW24/B
Black

DIMENSIONS

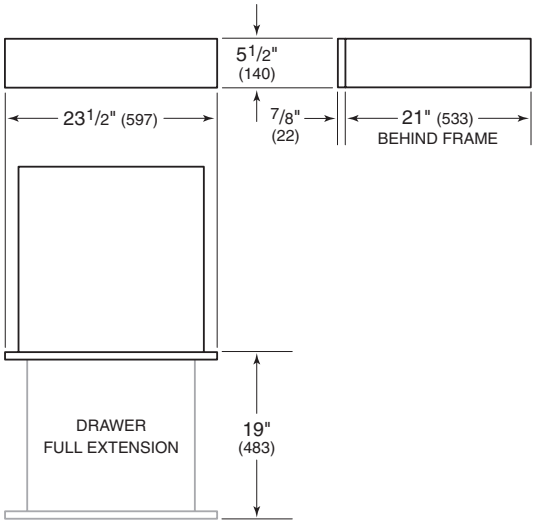

Planning Information

The cup warming drawer can be installed in a standard or flush inset application. Finish the edges of the opening. They may be visible when the drawer is open.

For standard installations, the face trim will overlap stiles and rails. Refer to the chart below.

For flush inset installations, a minimum 1/8" (3) reveal is required on all sides. To ensure consistent reveals, each corner of the opening must be exactly 90°.

INSTALLATION REQUIREMENTS

BASE SUPPORT	MIN
Cup Warming Drawer	75 lb (34 kg)
TRIM OVERLAP	
Top	0" (0)
Bottom	0" (0)
Sides	11/16" (18)

COMBINATION INSTALLATION

To install a cup warming drawer below a coffee system, one opening for both units must be specified. To achieve the minimum reveal between the units, place the coffee system support rails on top of the cup warming drawer, then secure the rails to the sides of the cabinet. Any material between the units will increase the horizontal reveal.

ELECTRICAL REQUIREMENTS

Installation must comply with all applicable electrical codes.

Locate the electrical supply as shown in the illustrations on the following pages. A separate circuit servicing only this appliance is required. A ground fault circuit interrupter (GFCI) is not recommended and may cause interruption of operation.

ELECTRICAL REQUIREMENTS

Electrical Supply	grounded, 120 VAC, 60 Hz
Service	10 amp dedicated circuit
Receptacle	3-prong grounding-type
Power Cord	3' (.9 m)

Cup Warming Drawer

STANDARD INSTALLATION

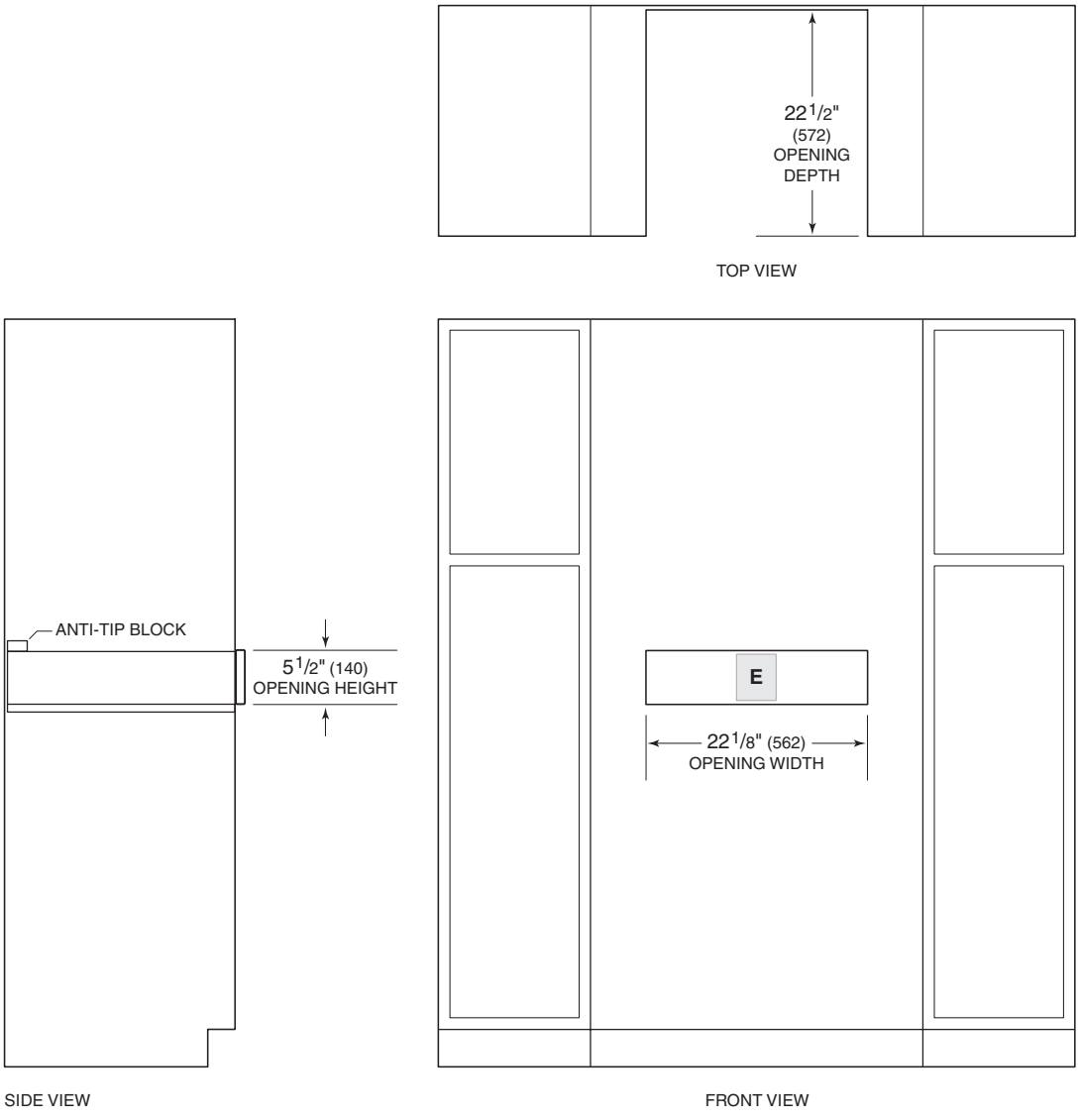

Cup Warming Drawer

FLUSH INSET INSTALLATION

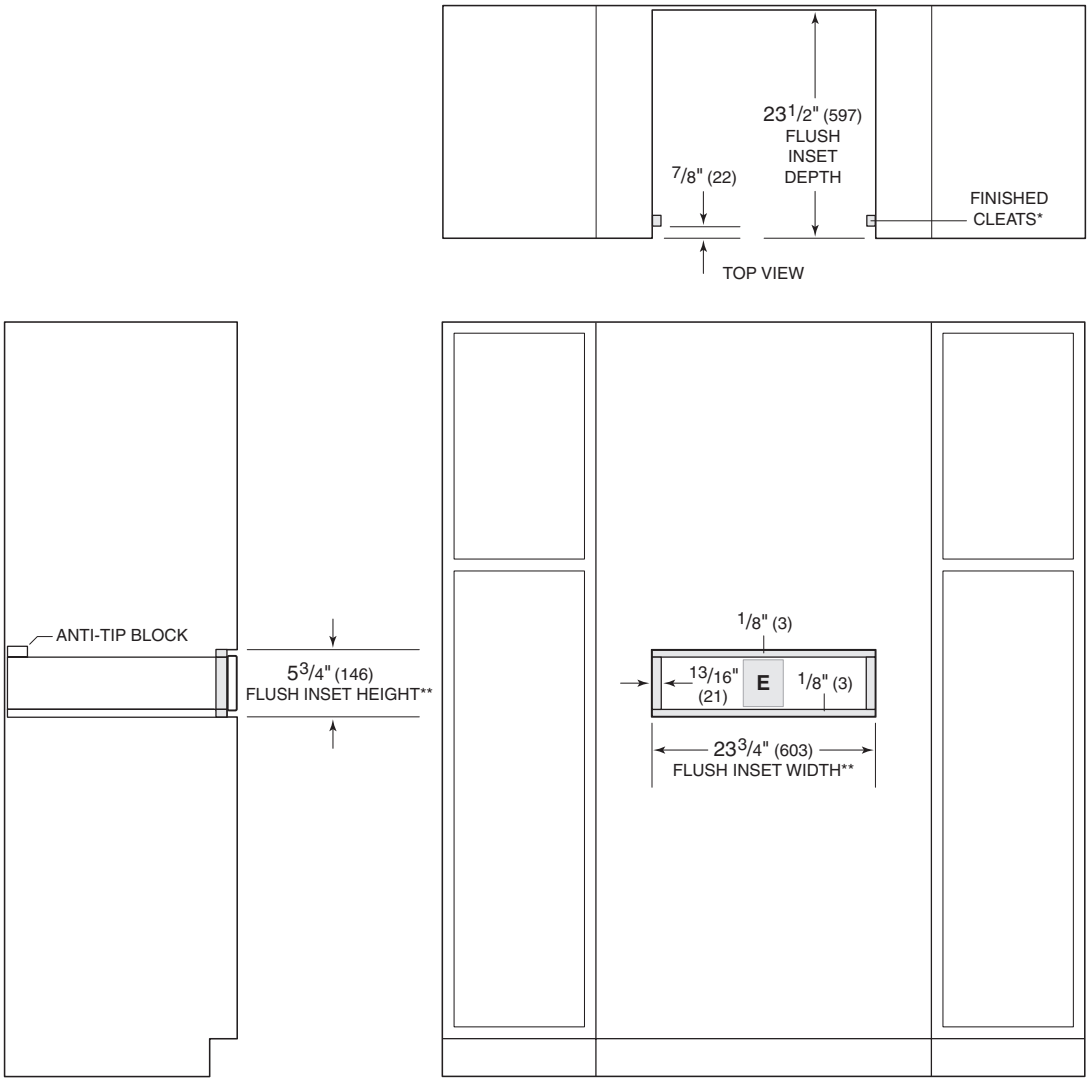

**Will be visible and should be finished to match cabinetry.*
***Dimension provides minimum reveals.*

WOLF

Dual Fuel Ranges

Discover a new world of cooking—the best of two worlds, actually—with a Wolf dual fuel range. Topside, gas cooking in all its glory, with the fine control of dual-stacked, sealed burners and options that include the remarkable French top. Below, that marvel of culinary technology, the Wolf convection electric oven. Its two fans and four heating elements let you select from 10 cooking modes so you can choose the one precisely suited to the dish you're preparing. The ovens are self-cleaning. With a variety of range widths to choose from, kitchens large and small become gateways to the exciting new world of dual fuel cooking. All models are constructed of stainless steel and can be ordered in natural or LP gas.

CONFIGURATIONS

30" RANGE

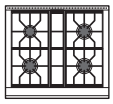

DF304

36" RANGE

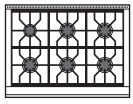

DF366

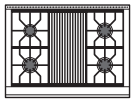

DF364C

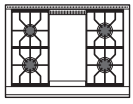

DF364G

48" RANGE

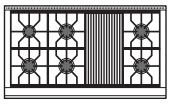

DF486C

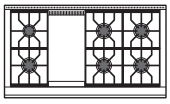

DF486G

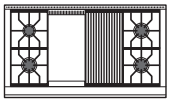

DF484CG

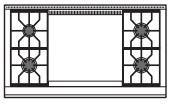

DF484DG

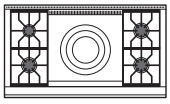

DF484F

60" RANGE

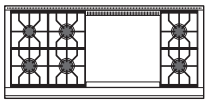

DF606DG

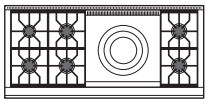

DF606F

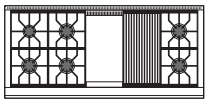

DF606CG

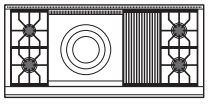

DF604CF

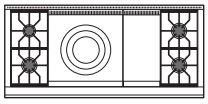

DF604GF

Dual Fuel Ranges

30" RANGE

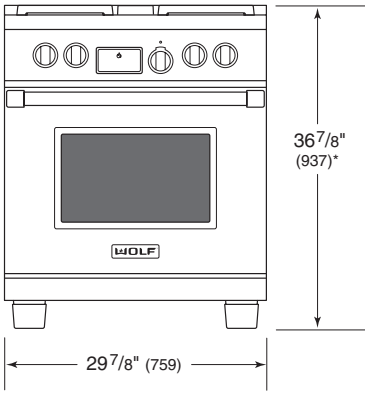

36" RANGE

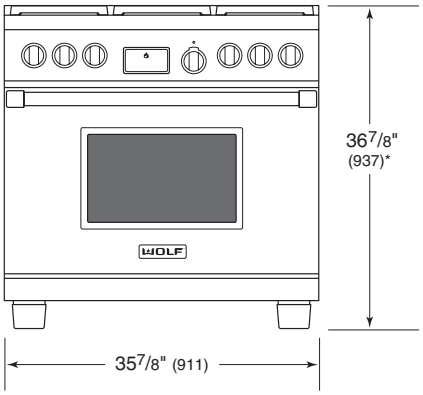

48" RANGE

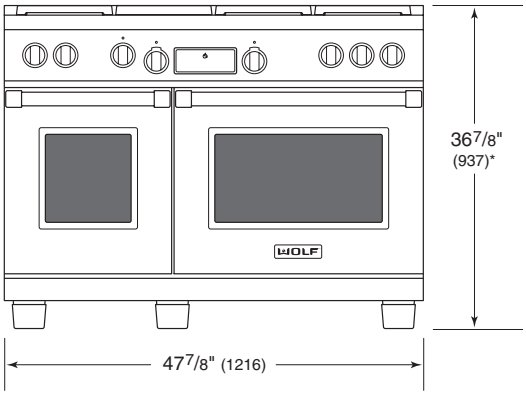

60" RANGE

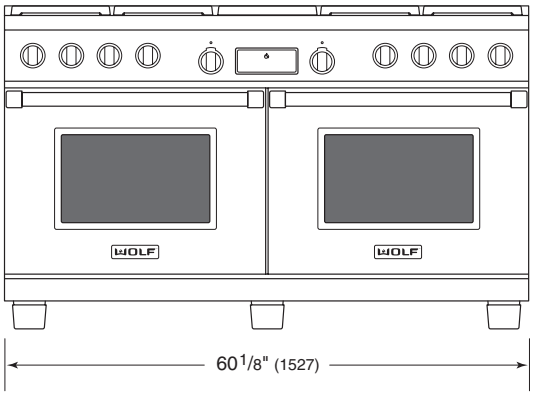

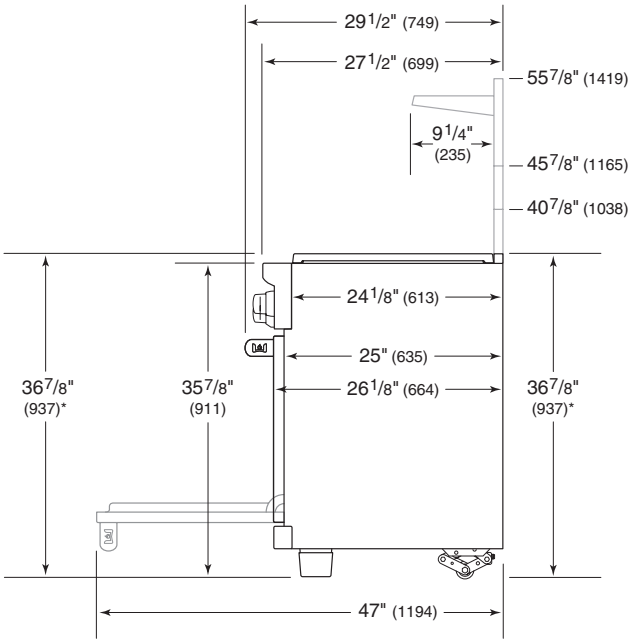

*36 7/8" (937) MIN TO 39" (991) MAX.

SIDE VIEW—ALL RANGES

Dual Fuel Ranges

BURNER RATING—BTU (kW)		
SURFACE BURNER	**SIM**	**HI**
20K Burner	300 (.1)	20,000 (5.9)
18K Burner (1, 2)	300 (.1)	18,000 (5.3)
15K Burner (1, 2)	300 (.1)	15,000 (4.4)
9.2K Burner	300 (.1)	9,200 (2.7)
FEATURE	**NATURAL**	**LP**
Charbroiler	16,000 (4.7)	16,000 (4.7)
Griddle	15,000 (4.4)	13,000 (3.8)
Double Griddle	30,000 (8.8)	26,000 (7.6)
French Top	15,000 (4.4)	15,000 (4.4)

Planning Information

When installing against a combustible surface, a minimum 10" (254) riser is required for a 36" dual fuel range with charbroiler or griddle and all 48" and 60" models. Follow all minimum clearances to combustible surfaces shown in the illustration on the following page.

A Wolf pro ventilation hood is recommended with the dual fuel range. Refer to page 154 for Pro Ventilation.

ELECTRICAL REQUIREMENTS

Installation must comply with all applicable electrical codes.

Locate the electrical supply flush with the wall or floor and within the shaded area shown in the illustration on the following page. A separate circuit servicing only this appliance is required.

If a power supply cord is being used with models that require a 50 amp breaker, the cord must be designated for use with ranges and rated for 240/208, 50 amps and must include 3 or 4 conductors. A 4-conductor cord is required for installations where grounding through the neutral is prohibited.

Wolf dual fuel ranges have a terminal block that allows for a 3-wire or 4-wire installation.

ELECTRICAL REQUIREMENTS	
SINGLE OVEN RANGE	
Electrical Supply	grounded, 240/208 VAC, 60 Hz
Service	30 amp dedicated circuit
Total Amps	21
DOUBLE OVEN RANGE	
Electrical Supply	grounded, 240/208 VAC, 60 Hz
Service	50 amp dedicated circuit
Total Amps	42.5

GAS SUPPLY

Installation must comply with all applicable gas codes.

If local codes permit, a certified, 3' (.9 m) long, 1/2" (13) or 3/4" (19) ID flexible metal appliance connector is recommended.

Wolf natural gas ranges will function up to 10,250' (3124 m) in altitude without adjustment and LP gas ranges will function up to 8,600' (2621 m). If the installation exceeds these elevations, contact an authorized Wolf dealer for a high altitude conversion kit.

GAS REQUIREMENTS	
Gas Supply	3/4" ID line
Gas Inlet	1/2" NPT female
NATURAL GAS	**WC**
Supply Pressure	5" (12.5 mb)
Min Line Pressure	7" (17.5 mb)
Max Regulator Pressure	14" (34.9 mb), .5 psi (3.5 kPa)
LP GAS	**WC**
Supply Pressure	10" (25 mb)
Min Line Pressure	11" (27.4 mb)
Max Regulator Pressure	14" (34.9 mb), .5 psi (3.5 kPa)

Dual Fuel Range

INSTALLATION

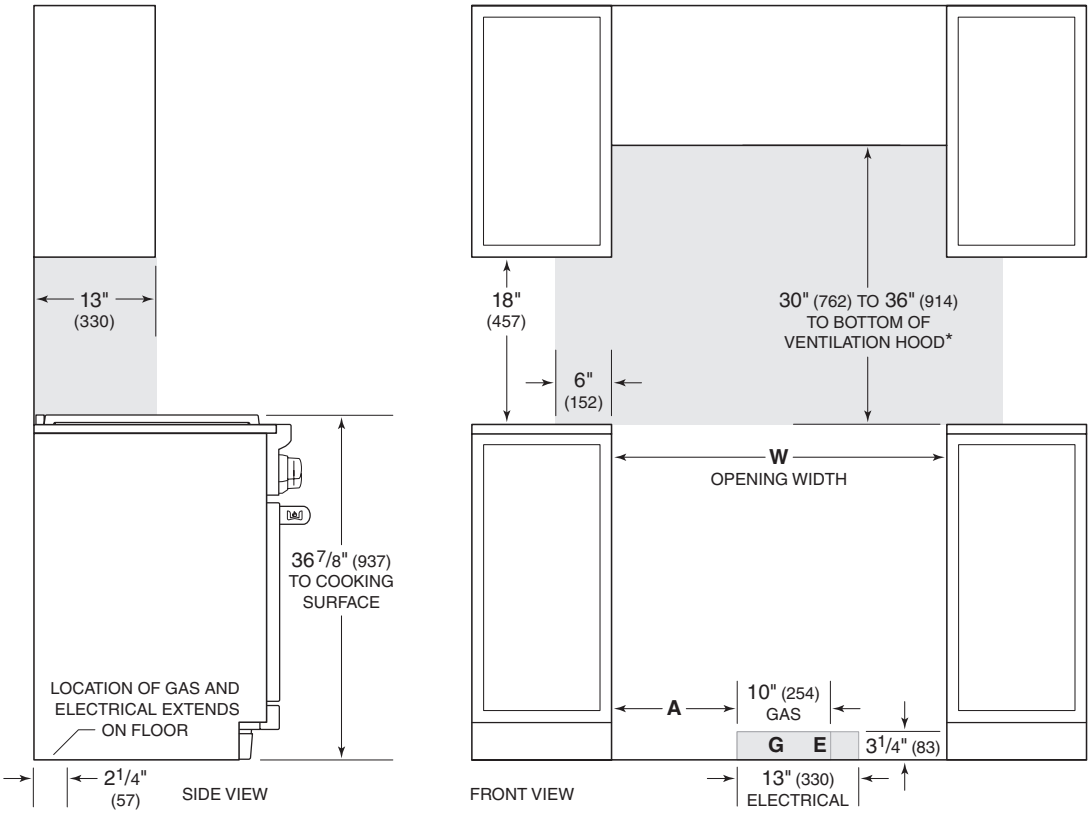

**Without ventilation hood, 36" (914) minimum clearance countertop to combustible materials, 44" (118) for charbroiler.*

NOTE: Shaded area above countertop indicates minimum clearance to combustible surfaces, combustible materials cannot be located within this area.
For island installation, 12" (305) minimum clearance back of range to combustible rear wall above countertop.

OPENING WIDTH	W	A
30" Range	30" (762)	8 1/2" (216)
36" Range	36" (914)	13 1/2" (343)
48" Range	48" (1219)	24" (610)
60" Range	60 1/4" (1530)	31" (787)

WOLF

Gas Ranges

Wolf gas ranges offer the same function, durability and exhilarating performance our ranges have become famous for. Now add the fine control of dual-stacked, sealed burners for gas cooking with superior results. Choose from a multitude of sizes and features to fit your cooking style. Standard features include an infrared broiler and convection baking. Options include infrared griddle, charbroiler, and the innovative French top. All gas range models are constructed of stainless steel and can be ordered in natural or LP gas.

CONFIGURATIONS

30" RANGE

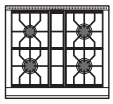

GR304

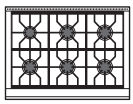

GR366

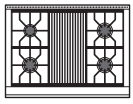

GR364C

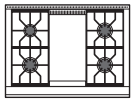

GR364G

48" RANGE

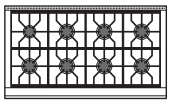

GR488

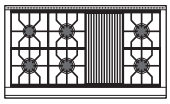

GR486C

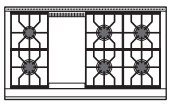

GR486G

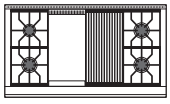

GR484CG

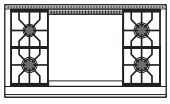

GR484DG

60" RANGE

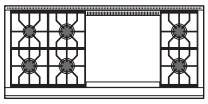

GR606DG

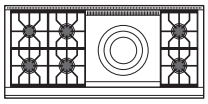

GR606F

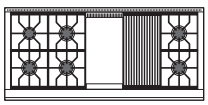

GR606CG

Gas Ranges

30" RANGE

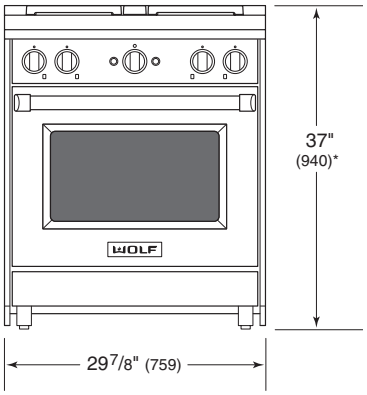

36" RANGE

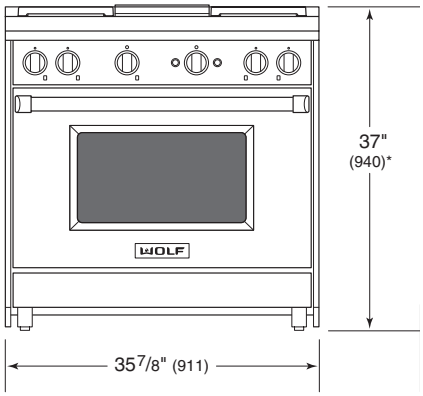

48" RANGE

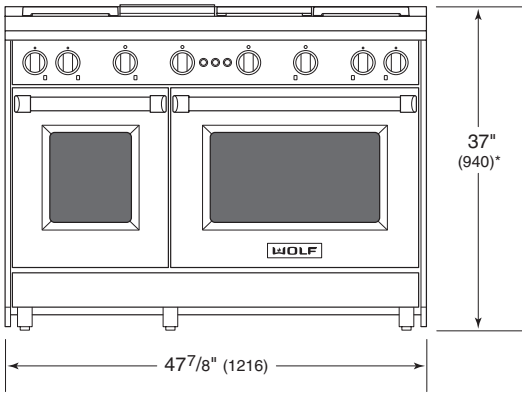

60" RANGE

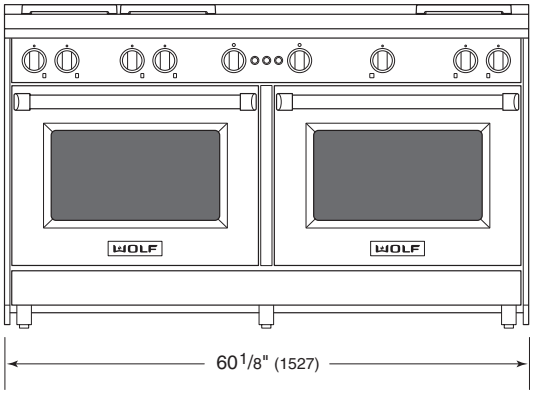

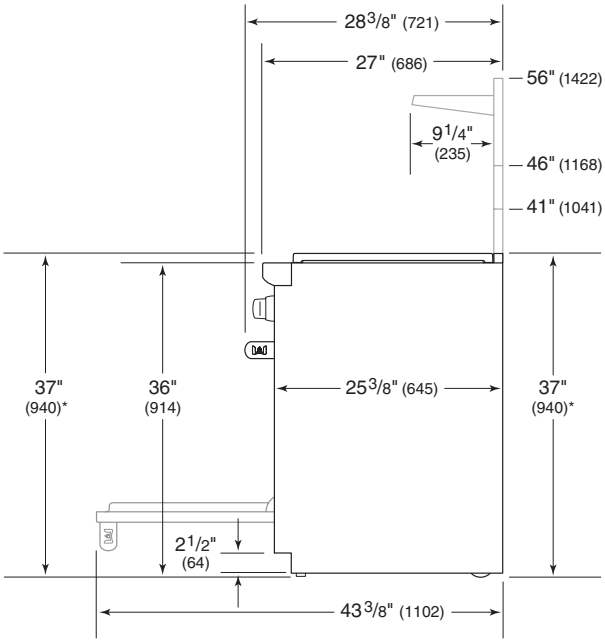

*37" (940) MIN TO 38" (965) MAX.

SIDE VIEW—ALL RANGES

Gas Ranges

BURNER RATING—BTU (kW)		
SURFACE BURNER	**SIM**	**HI**
15K Burner (3, 5, 7)	300 (.1)	15,000 (4.4)
9.2K Burner	300 (.1)	9,200 (2.7)
FEATURE	**NATURAL**	**LP**
Charbroiler	16,000 (4.7)	16,000 (4.7)
Griddle	15,000 (4.4)	13,000 (3.8)
Double Griddle	30,000 (8.8)	26,000 (7.6)
French Top	15,000 (4.4)	15,000 (4.4)
OVEN BURNER		
18" Oven		18,000 (5.3)
30" Oven		30,000 (8.8)
36" Oven		30,000 (8.8)
Infrared Broiler		18,000 (5.3)

Planning Information

When installing against a combustible surface, a minimum 20" (508) riser is required. Follow all minimum clearances to combustible surfaces shown in the illustration on the following page.

A Wolf pro ventilation hood is recommended with the gas range. Refer to page 154 for Pro Ventilation.

ELECTRICAL REQUIREMENTS

Installation must comply with all applicable electrical codes.

Locate the electrical supply flush with the wall or floor and within the shaded area shown in the illustration on the following page. A separate circuit servicing only this appliance is required.

ELECTRICAL REQUIREMENTS	
Electrical Supply	grounded, 110/120 VAC, 60 Hz
Service	15 amp dedicated circuit
Receptacle	3-prong grounding-type
Power Cord	6' (1.8 m)

GAS SUPPLY

Installation must comply with all applicable gas codes.

If local codes permit, a certified, 3' (.9 m) long, 1/2" (13) or 3/4" (19) ID flexible metal appliance connector is recommended.

Wolf natural gas ranges will function up to 8,600' (2621 m) in altitude without adjustment. If the installation exceeds this elevation, contact an authorized Wolf dealer for a high altitude conversion kit. LP models do not require conversion.

GAS REQUIREMENTS	
Gas Supply	3/4" ID line
Gas Inlet	1/2" NPT female
NATURAL GAS	**WC**
Supply Pressure	5" (12.5 mb)
Min Line Pressure	7" (17.5 mb)
Max Regulator Pressure	14" (34.9 mb), .5 psi (3.5 kPa)
LP GAS	**WC**
Supply Pressure	10" (25 mb)
Min Line Pressure	11" (27.4 mb)
Max Regulator Pressure	14" (34.9 mb), .5 psi (3.5 kPa)

Gas Range

INSTALLATION

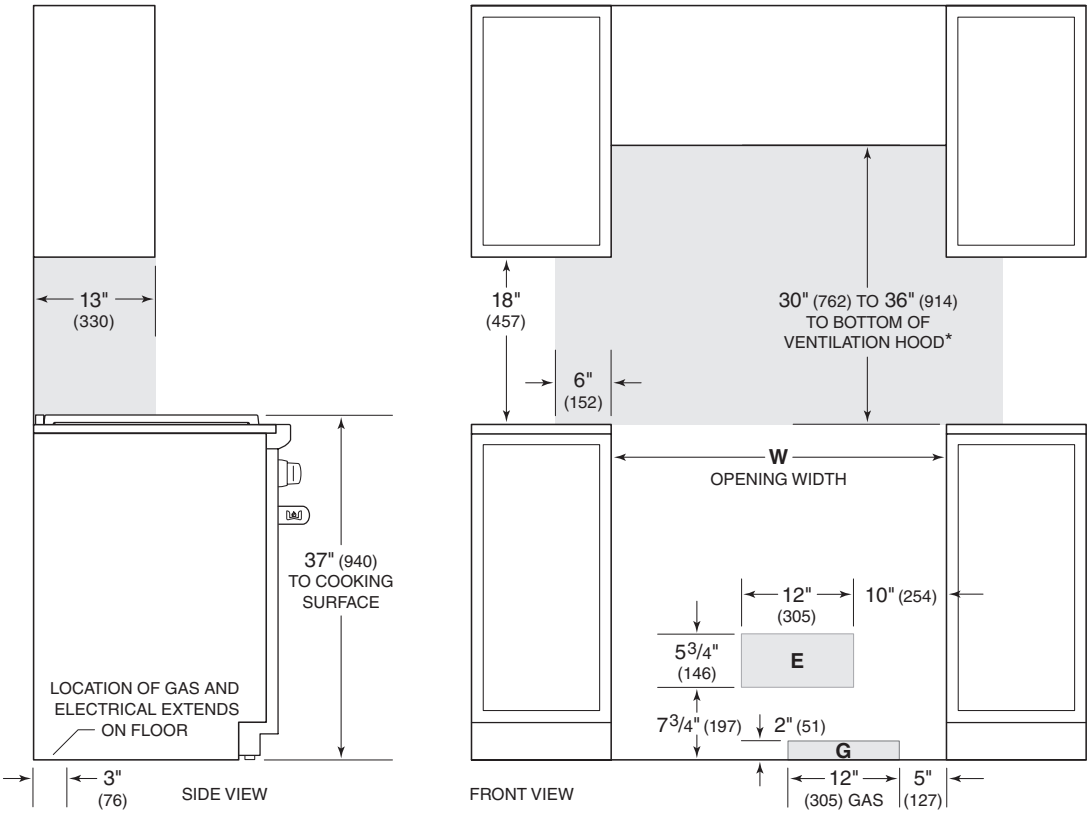

**Without ventilation hood, 42" (1067) minimum clearance countertop to combustible materials, charbroiler and GR488 require non-combustible materials.*

NOTE: Shaded area above countertop indicates minimum clearance to combustible surfaces, combustible materials cannot be located within this area.
For island installation, 12" (305) minimum clearance back of range to combustible rear wall above countertop.

OPENING WIDTH	W
30" Range	30" (762)
36" Range	36" (914)
48" Range	48" (1219)
60" Range	60 1/4" (1530)

WOLF
INDUCTION
WOLF

Induction Ranges

Experience a new way cooking with a Wolf induction range. Magnetism allows the ultrafast, energy efficient surface elements to heat up instantly and with perfectly distributed heat. Heat generation stops the instant you turn off the element or remove the pan. The cooktop's surface remains cool. Your kitchen stays cooler too. The electric convection oven with two fans and four heating elements let you select from 10 cooking modes and is self-cleaning. Wolf induction ranges are constructed of stainless steel and come in 30" and 36" widths. Transitional models have a tubular handle and professional models feature a pro handle.

CONFIGURATIONS

30" RANGE

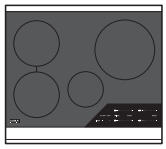

IR304

36" RANGE

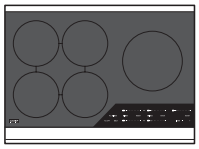

IR365

Induction Ranges

30" RANGE

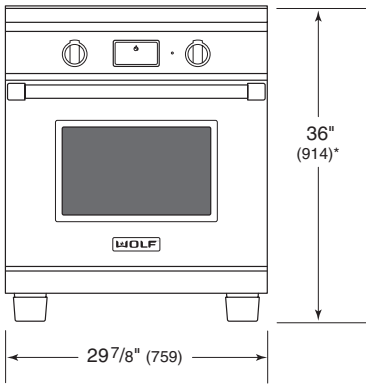

36" RANGE

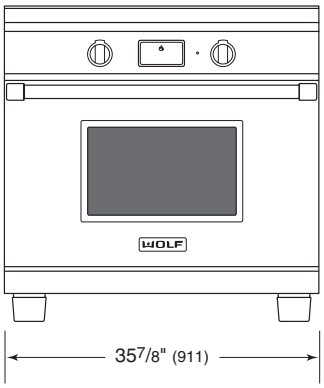

30" / 36" RANGE SIDE VIEW

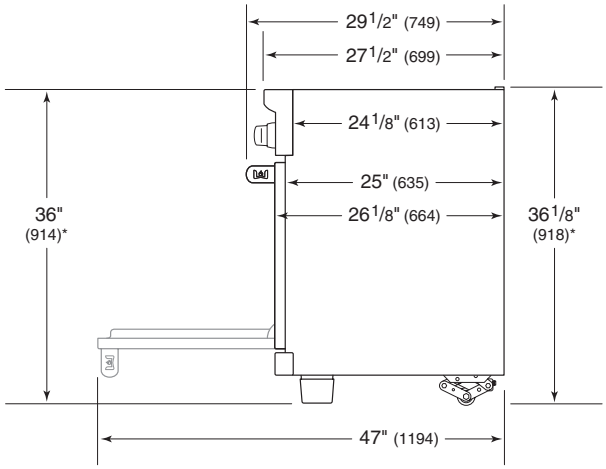

*36" (914) MIN TO 38 1/8" (968) MAX.

Induction Ranges

INDUCTION ELEMENT RATING

30" RANGE	W
11" (279)	2600/3150 boost
8" (203)	2100/3000 boost
8" (203)	2100
6" (152)	1400

36" RANGE	W
11" (279)	2600/3700 boost
(2) 8" (203)	2100/3000 boost
(2) 8" (203)	2100

Planning Information

Follow all minimum clearances to combustible surfaces shown in the illustration on the following page.

IMPORTANT NOTE: Adjacent countertops must be at least $35^{7}/_{8}$" for flush installation to the top of the unit.

ELECTRICAL REQUIREMENTS

Installation must comply with all applicable electrical codes.

Locate the electrical supply flush with the wall or floor and within the shaded area shown in the illustration on the following page. A separate circuit servicing only this appliance is required.

If a power supply cord is being used with models that require a 50 amp breaker, the cord must be designated for use with ranges and rated for 240/208, 50 amps and must include 3 or 4 conductors. A 4-conductor cord is required for installations where grounding through the neutral is prohibited.

Performance may be compromised if the electrical supply is less than 240 volts.

ELECTRICAL REQUIREMENTS

Electrical Supply	grounded, 240/208 VAC, 60 Hz
Service	50 amp dedicated circuit

Induction Range

INSTALLATION

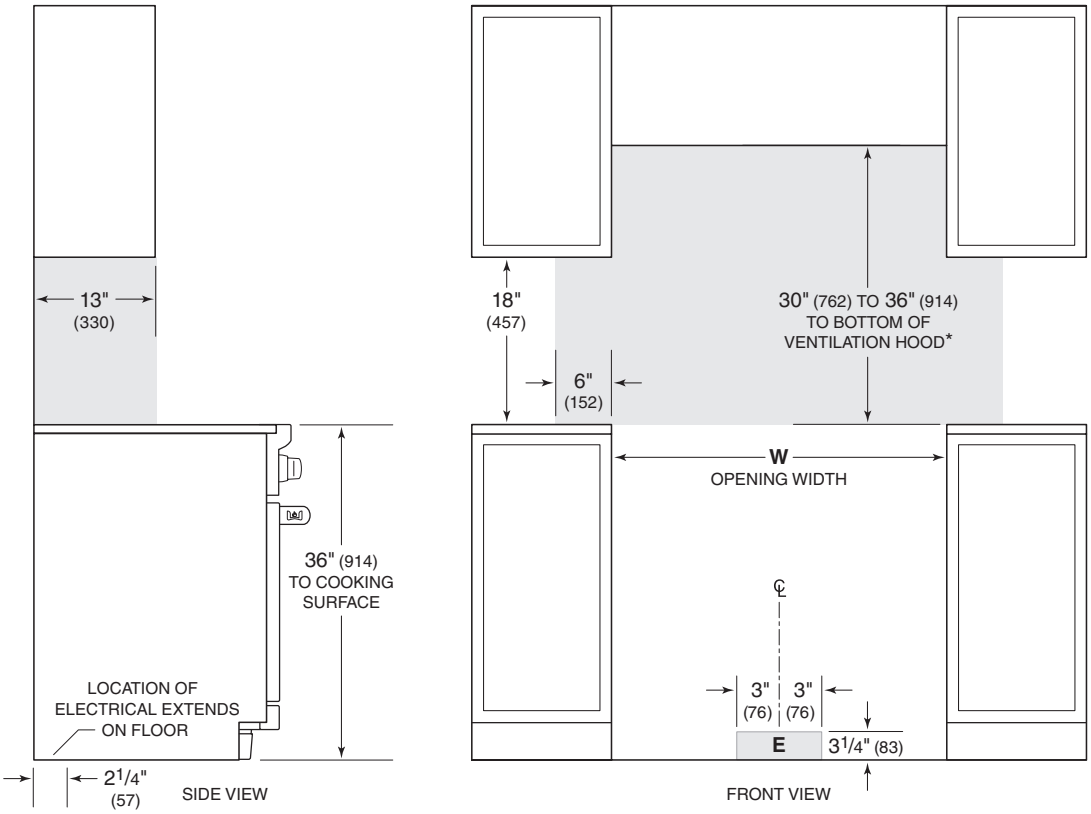

**Without ventilation hood, 36" (914) minimum clearance countertop to combustible materials.*

NOTE: Shaded area above countertop indicates minimum clearance to combustible surfaces, combustible materials cannot be located within this area.
For island installation, 12" (305) minimum clearance back of range to combustible rear wall above countertop.

OPENING WIDTH	W
30" Range	30" (762)
36" Range	36" (914)

WOLF
WOLF

Sealed Burner Rangetops

Wolf sealed burner rangetops incorporate all the gas cooking features of a Wolf dual fuel range. Customize your rangetop with your preferred combination of burners (from four to six), infrared griddle or charbroiler, or the remarkable French top. Compared with conventional electric elements, the infrared elements of the charbroiler and griddle are a revelation. They preheat almost instantly, distribute heat more evenly, and deliver fast temperature recovery after food is placed on the surface. All sealed burner rangetop models are constructed of stainless steel and can be ordered in natural or LP gas.

CONFIGURATIONS

30" RANGETOP

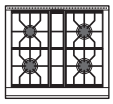

SRT304

36" RANGETOP

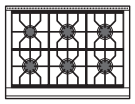

SRT366

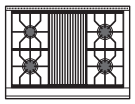

SRT364C

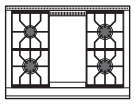

SRT364G

48" RANGETOP

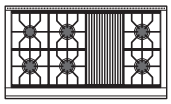

SRT486C

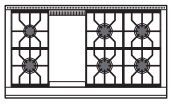

SRT486G

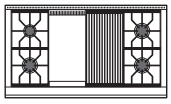

SRT484CG

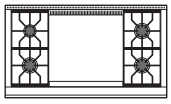

SRT484DG

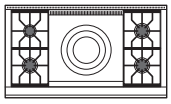

SRT484F

Sealed Burner Rangetops

30" RANGETOP

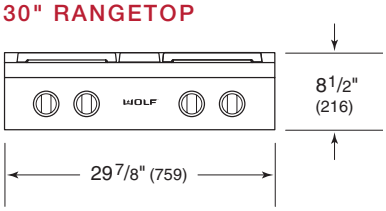

36" RANGETOP

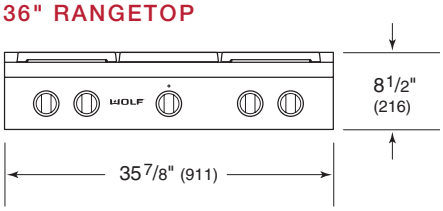

48" RANGETOP

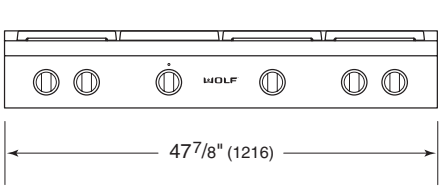

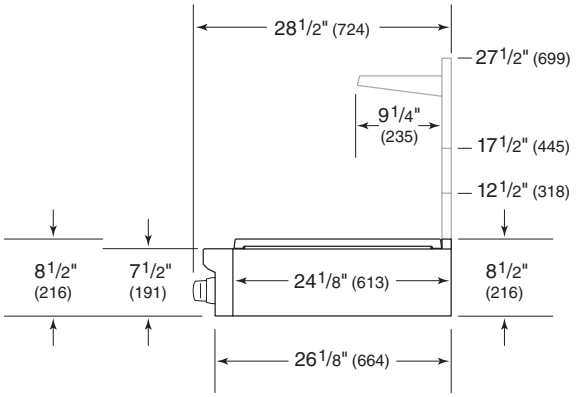

SIDE VIEW—ALL RANGETOPS

Sealed Burner Rangetops

BURNER RATING—BTU (kW)

SURFACE BURNER	SIM	HI
20K Burner	300 (.1)	20,000 (5.9)
18K Burner (1, 2)	300 (.1)	18,000 (5.3)
15K Burner (1, 2)	300 (.1)	15,000 (4.4)
9.2K Burner	300 (.1)	9,200 (2.7)
FEATURE	**NATURAL**	**LP**
Charbroiler	16,000 (4.7)	16,000 (4.7)
Griddle	15,000 (4.4)	13,000 (3.8)
Double Griddle	30,000 (8.8)	26,000 (7.6)
French Top	15,000 (4.4)	15,000 (4.4)

Planning Information

The platform to support the sealed burner rangetop must include a cutout for electrical and gas supply connections. Refer to the chart below for minimum base support.

When installing against a combustible surface, a minimum 5" (127) riser is required for model SRT366, and a minimum 10" (254) riser is required for 36" and 48" sealed burner rangetops with a charbroiler or griddle. Follow all minimum clearances to combustible surfaces shown in the illustration on the following page.

A Wolf pro ventilation hood is recommended with the sealed burner rangetop. Refer to page 154 for Pro Ventilation.

A downdraft can be used with models SRT304 and SRT366. An accessory trim kit is necessary for this installation. Contact an authorized Wolf dealer for details.

INSTALLATION REQUIREMENTS

BASE SUPPORT	MIN
30" Rangetop	200 lb (91 kg)
36" Rangetop	250 lb (113 kg)
48" Rangetop	300 lb (136 kg)
PLATFORM	**MIN**
Thickness	3/4" (19)

Planning Information

ELECTRICAL REQUIREMENTS

Installation must comply with all applicable electrical codes.

Locate the electrical supply within the shaded area shown in the illustration on the following page. A separate circuit servicing only this appliance is required.

ELECTRICAL REQUIREMENTS

Electrical Supply	grounded, 110/120 VAC, 60 Hz
Service	15 amp dedicated circuit
Receptacle	3-prong grounding-type
Power Cord	6' (1.8 m)

GAS SUPPLY

Installation must comply with all applicable gas codes.

If local codes permit, a certified, 3' (.9 m) long, 1/2" (13) or 3/4" (19) ID flexible metal appliance connector is recommended.

Wolf natural gas rangetops will function up to 10,250' (3124 m) in altitude without adjustment and LP gas rangetops up to 8,600' (2621 m). If the installation exceeds these elevations, contact an authorized Wolf dealer for a high altitude conversion kit.

GAS REQUIREMENTS

Gas Supply	3/4" ID line
Gas Inlet	1/2" NPT female
NATURAL GAS	**WC**
Supply Pressure	5" (12.5 mb)
Min Line Pressure	7" (17.5 mb)
Max Regulator Pressure	14" (34.9 mb), .5 psi (3.5 kPa)
LP GAS	**WC**
Supply Pressure	10" (25 mb)
Min Line Pressure	11" (27.4 mb)
Max Regulator Pressure	14" (34.9 mb), .5 psi (3.5 kPa)

Sealed Burner Rangetop

INSTALLATION

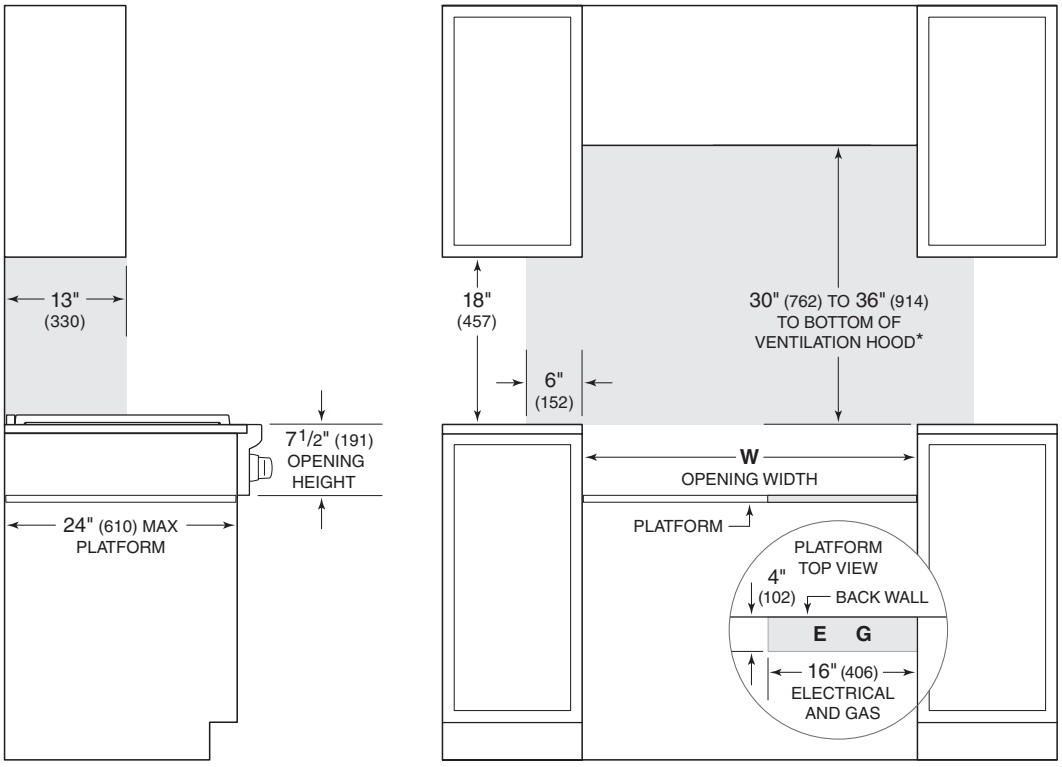

SIDE VIEW

FRONT VIEW

**Without ventilation hood, 36" (914) minimum clearance countertop to combustible materials, 44" (118) for charbroiler.*

NOTE: Shaded area above countertop indicates minimum clearance to combustible surfaces, combustible materials cannot be located within this area.
Electrical and gas supply located through bottom of platform.
For island installation, 12" (305) minimum clearance back of rangetop to combustible rear wall above countertop.

OPENING WIDTH	W
30" Rangetop	30" (762)
36" Rangetop	36" (914)
48" Rangetop	48" (1219)

WOLF

Outdoor Grills and Modules

Taste what happens when the heritage of professional cooking moves from the kitchen to the patio. Like their indoor counterparts, Wolf outdoor grills are precision instruments. Constructed of heavy-duty stainless steel, the 30", 36", 42", and 54" grills have powerful burners every five inches for even heat distribution. An electric rotisserie with infrared burner produces succulent poultry and roasts. All grill models can be built in and all except the 54" grill, can be used on a cart for portable convenience. The 25,000 Btu burner module can be built into an outdoor kitchen and the side burner attached to a cart. Wolf grills and modules can be ordered in natural or LP gas.

OUTDOOR GRILLS

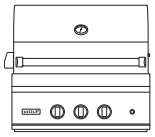

OG30

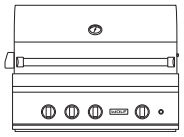

OG36

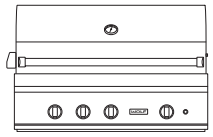

OG42

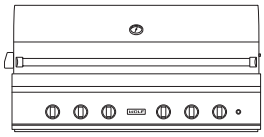

OG54

OUTDOOR MODULES

BM13
BURNER MODULE

SB13
SIDE BURNER

Outdoor Grills and Modules

OUTDOOR GRILL

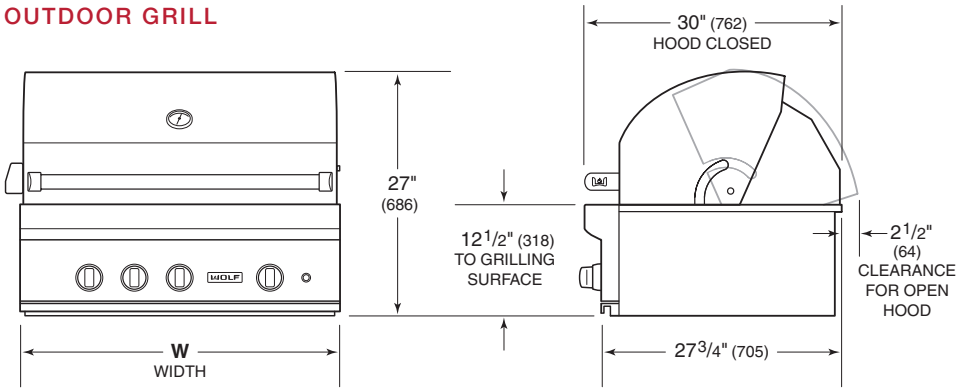

GRILL CART

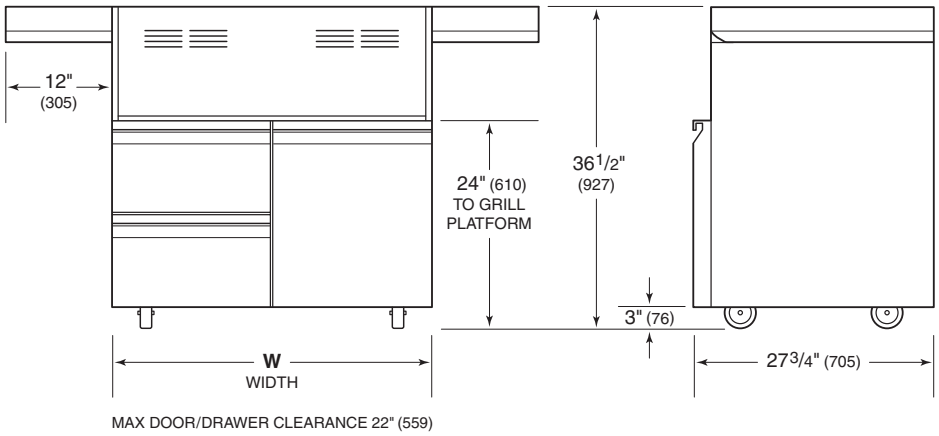

MAX DOOR/DRAWER CLEARANCE 22" (559)

BURNER MODULE / SIDE BURNER

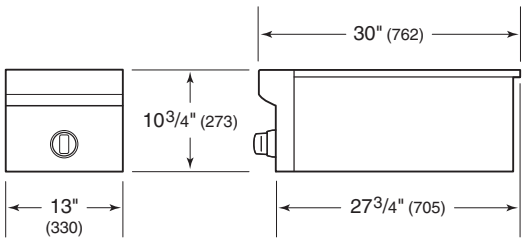

OUTDOOR GRILL	W
OG30	30" (762)
OG36	36" (914)
OG42	42" (1067)
OG54	54" (1372)

GRILL CART	W
CART30	30" (762)
CART36	36" (914)
CART42	42" (1067)

Outdoor Grills and Modules

BURNER RATING

GRILL BURNERS	BTU (kW)
OG30, OG36, OG42, BM13, SB13	25,000 (7.3)
OG54	25,500 (7.5)
SEAR ZONE	**BTU (kW)**
OG36, OG42	25,000 (7.3)
OG54	25,500 (7.5)
ROTISSERIE	**BTU (kW)**
OG30	14,000 (4.1)
OG36, OG42	16,000 (4.7)
OG54	(2) 14,000 (4.1)

Planning Information

For portable applications, Wolf grill carts are designed specifically to fit grill models OG30, OG36, and OG42 and the side burner. Model OG54 is designed for built-in applications only.

For built-in applications, Wolf outdoor grills and the burner module are designed for easy placement into a built-in enclosure. For outdoor grills, installation in a combustible enclosure requires an insulating liner. For the burner module, an insulating liner is not required. The enclosure should be built according to specifications for your specific installation on the following pages. If the burner module is installed next to an outdoor grill, a minimum of 12" (305) is required between the units on the rotisserie motor side and 2" (51) on the opposite side. A rotisserie side conversion kit is available from an authorized Wolf dealer.

Optional stainless steel accessory doors and drawers are available for built-in applications.

Grill carts, insulating liners, and stainless steel doors and drawers are available through an authorized Wolf dealer. For local dealer information, visit the find a showroom section of our website, wolfappliance.com.

Planning Information

ELECTRICAL REQUIREMENTS

Installation must comply with all applicable electrical codes.

The electrical outlet must be located within reach of the power cord. A separate circuit servicing only this appliance is required. A ground fault circuit interrupter (GFCI) is required to reduce the risk of electrical shock.

ELECTRICAL REQUIREMENTS	
Electrical Supply	grounded, 120 VAC, 60 Hz
Service	15 amp dedicated circuit
Receptacle	3-prong grounding-type, GFCI
Power Cord	6' (1.8 m)

GAS SUPPLY

Installation must comply with all applicable gas codes.

If local codes permit, a certified, 3' (.9 m) long, 1/2" (13) or 3/4" (19) ID flexible metal appliance connector is recommended.

If the outdoor grill is being connected to a whole house LP supply, the LP gas pressure regulator is not provided. It can be purchased from an authorized Wolf dealer. For local dealer information, visit the find a showroom section of our website, wolfappliance.com.

GAS REQUIREMENTS	
Gas Supply	3/4" ID line
Gas Inlet	1/2" NPT female
NATURAL GAS	**WC**
Supply Pressure	5" (12.5 mb)
Min Line Pressure	7" (17.5 mb)
Max Regulator Pressure	14" (34.9 mb), .5 psi (3.5 kPa)
LP GAS	**WC**
Supply Pressure	10" (25 mb)
Min Line Pressure	11" (27.4 mb)
Max Regulator Pressure	14" (34.9 mb), .5 psi (3.5 kPa)

Accessory Doors and Drawers

DOORS

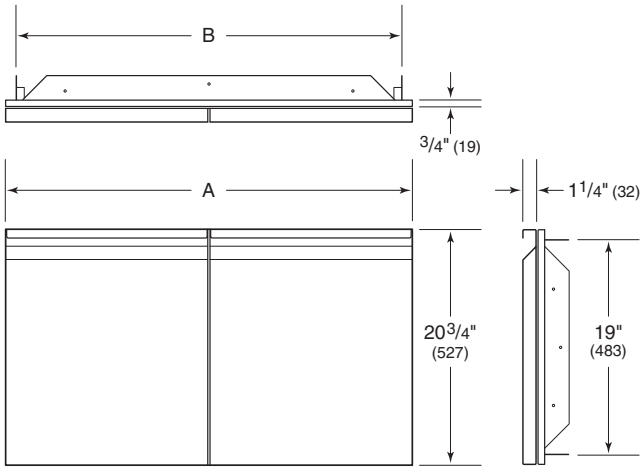

DOOR WIDTH	A	B
18" Single	18" (457)	16 1/4" (413)
30" Double	30" (762)	28 1/4" (718)
36" Double	36" (914)	34 1/4" (870)
42" Double	42" (1067)	40 1/4" (1022)
54" Double	54" (1372)	52 1/4" (1327)

SINGLE DRAWER

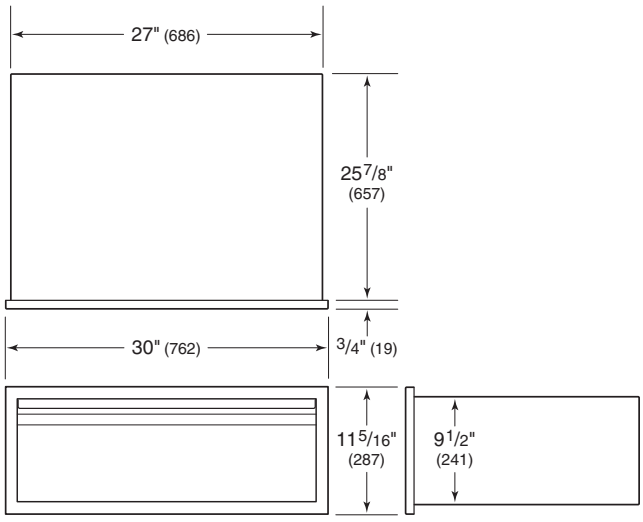

2- OR 3-DRAWER UNIT

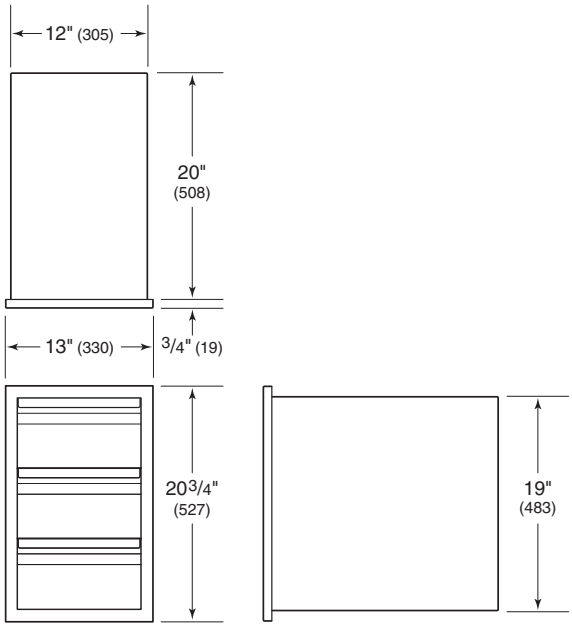

DRAWER/DOOR UNIT

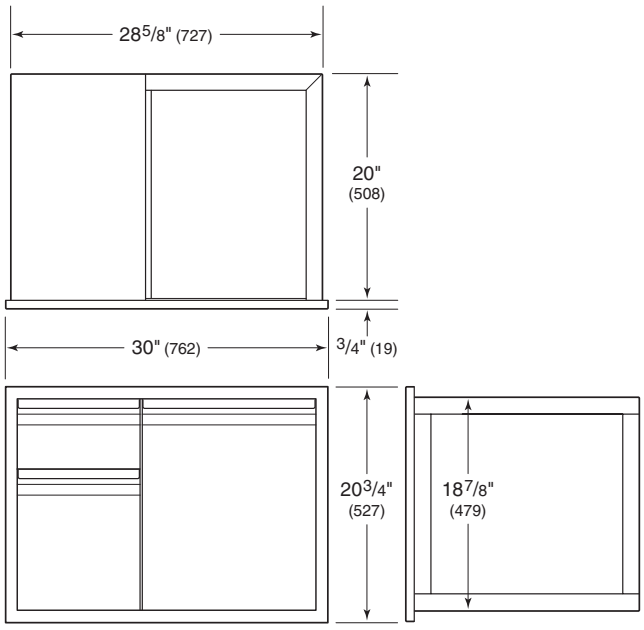

Outdoor Grill

NON-COMBUSTIBLE INSTALLATION

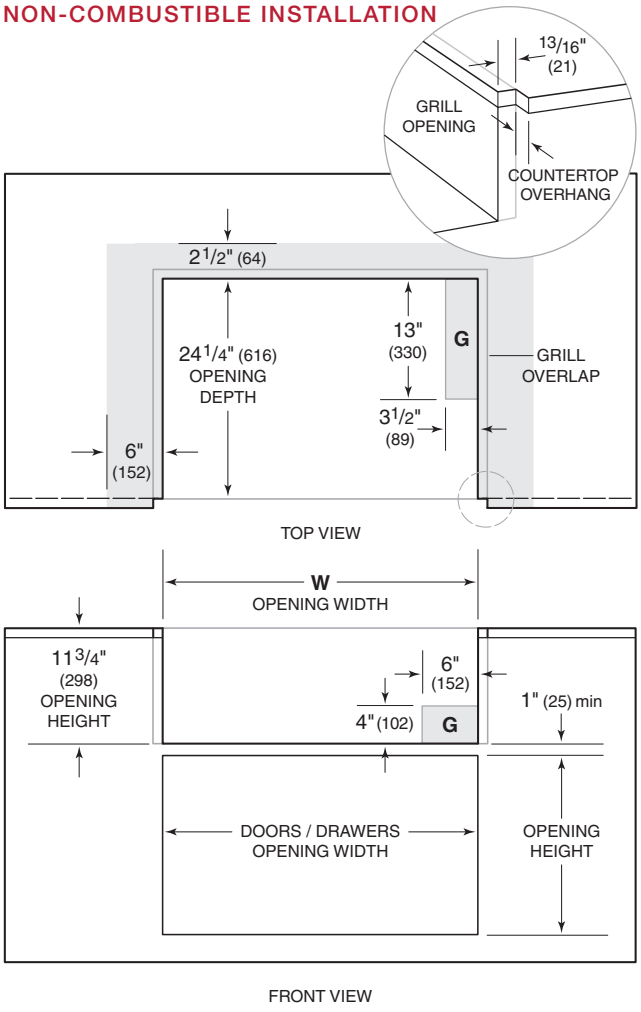

NOTE: Shaded area above countertop indicates minimum clearance to combustible surfaces, combustible materials cannot be located within this area.

COMBUSTIBLE INSTALLATION

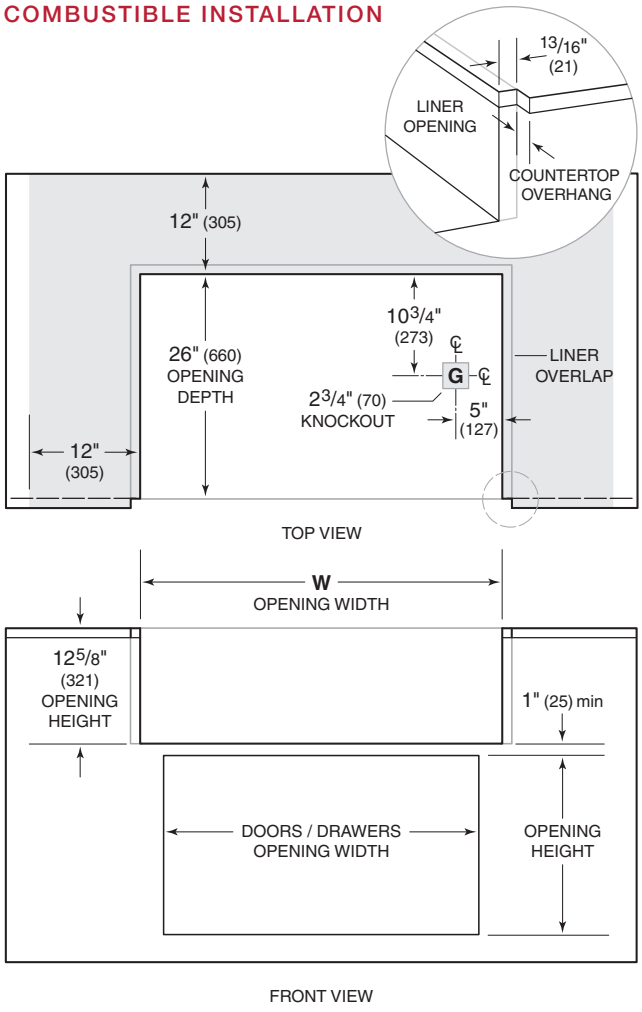

NOTE: Shaded area above countertop indicates minimum clearance to combustible surfaces, combustible materials cannot be located within this area.

NON-COMBUSTIBLE ENCLOSURE	W
OG30	28 1/2" (724)
OG36	34 1/2" (876)
OG42	40 1/2" (1029)
OG54	52 1/2" (1334)

COMBUSTIBLE ENCLOSURE	W
OG30	33 1/2" (851)
OG36	39 1/2" (1003)
OG42	45 1/2" (1156)
OG54	57 1/2" (1461)

Outdoor Grills

ACCESSORY DOORS AND DRAWERS

OPENING—DOORS	W	H
18" Single	16 1/4" (413)	19" (483)
30" Double	28 1/4" (718)	19" (483)
36" Double	34 1/4" (870)	19" (483)
42" Double	40 1/4" (1022)	19" (483)
54" Double	52 1/4" (1327)	19" (483)

OPENING—DRAWERS	W	H
Single Drawer	27 1/4" (692)	9 3/4" (248)
2- or 3-Drawer Unit	12 1/8" (308)	19" (483)
Drawer/Door Unit	29 1/4" (743)	19" (483)

Burner Module

INSTALLATION

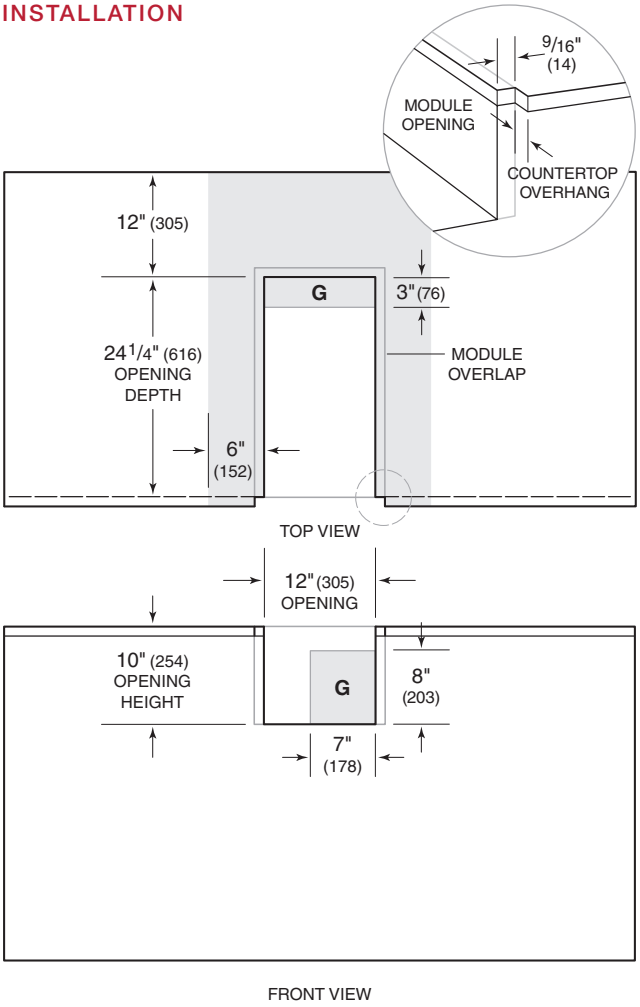

NOTE: Shaded area above countertop indicates minimum clearance to combustible surfaces, combustible materials cannot be located within this area. An insulating liner is not required.

Cooktop Ventilation Hoods

The new generation of Wolf cooktop ventilation hoods feature three new looks—black, stainless, and glass. Brilliant LED lighting illuminates your cooking surface while powerful multi-speed blowers whisk away smoke and odors. Dishwasher-safe filters can be removed easily for cleaning. Wall-mount and island hoods are crafted of stainless steel.

COOKTOP HOODS

BLACK

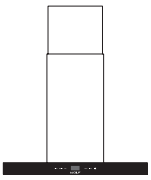

VW30B WALL

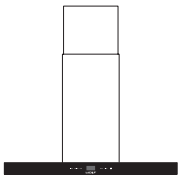

VW36B WALL

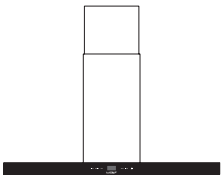

VW45B WALL

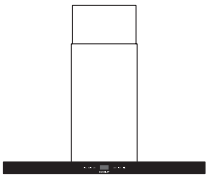

VI42B ISLAND

STAINLESS

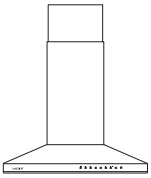

VW30S WALL

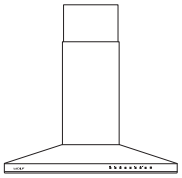

VW36S WALL

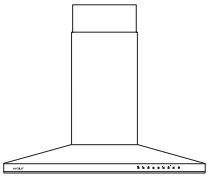

VI42S ISLAND

GLASS

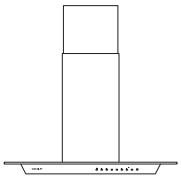

VW36G WALL

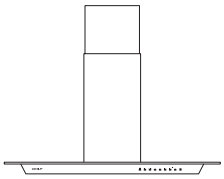

VW45G WALL

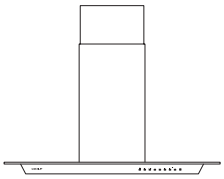

VI45G ISLAND

Cooktop Hoods

WALL HOODS—BLACK

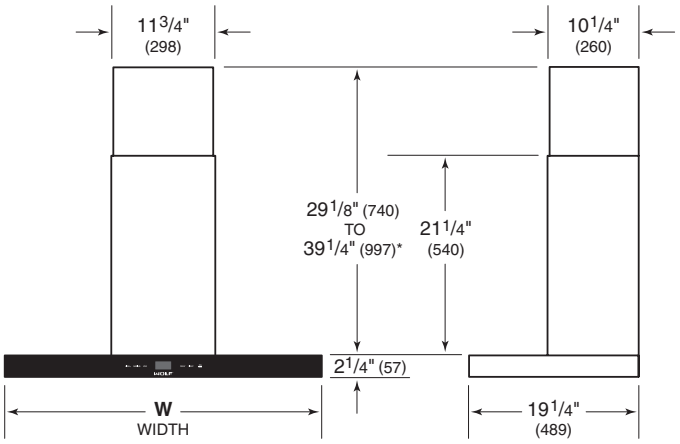

**49 1/8" (1248) to 59 1/4" (1505) with accessory flue extension.*

WIDTH	W
VW30B	30" (762)
VW36B	36" (914)
VW45B	45" (1143)

ISLAND HOOD—BLACK

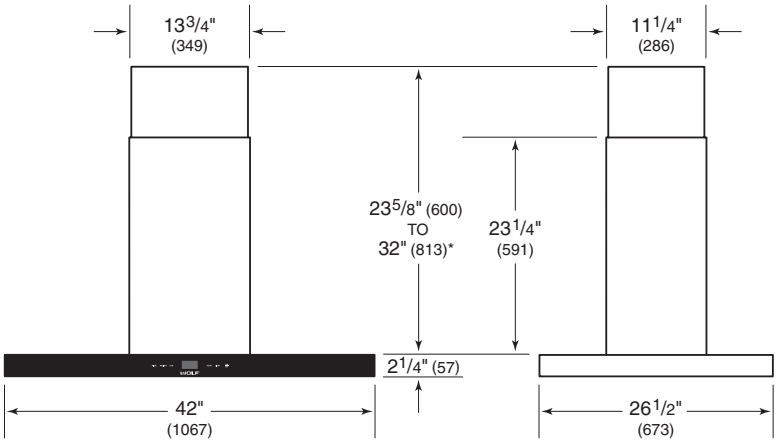

**46 1/4" (1175) to 55" (1397) with accessory flue extension.*

Cooktop Hoods

WALL HOODS—STAINLESS

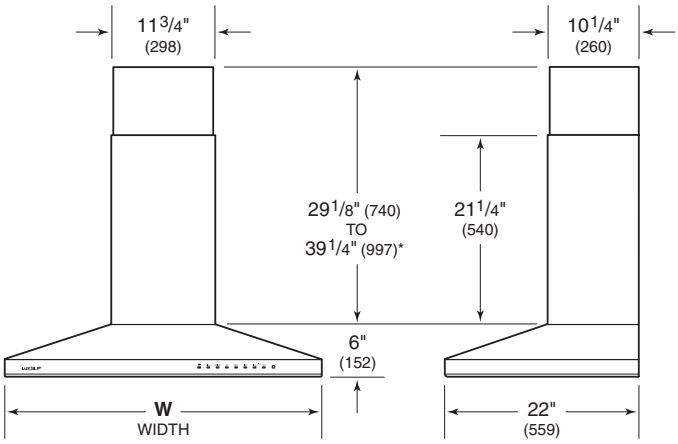

**49 1/8" (1248) to 59 1/4" (1505) with accessory flue extension.*

WIDTH	W
VW30S	30" (762)
VW36S	36" (914)

ISLAND HOOD—STAINLESS

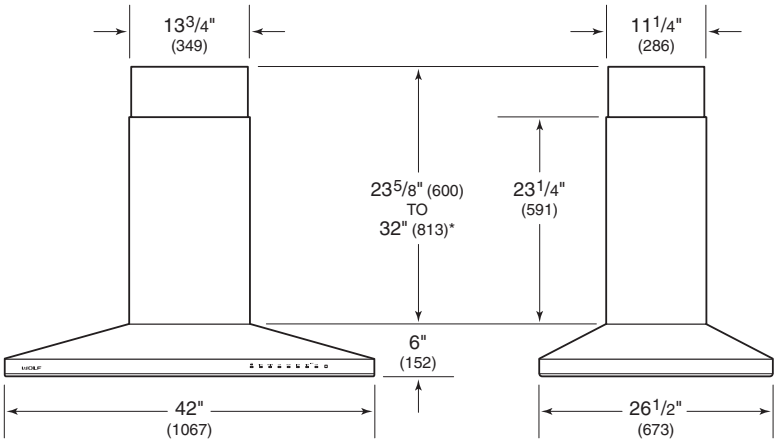

**46 1/4" (1175) to 55" (1397) with accessory flue extension.*

Cooktop Hoods

WALL HOODS—GLASS

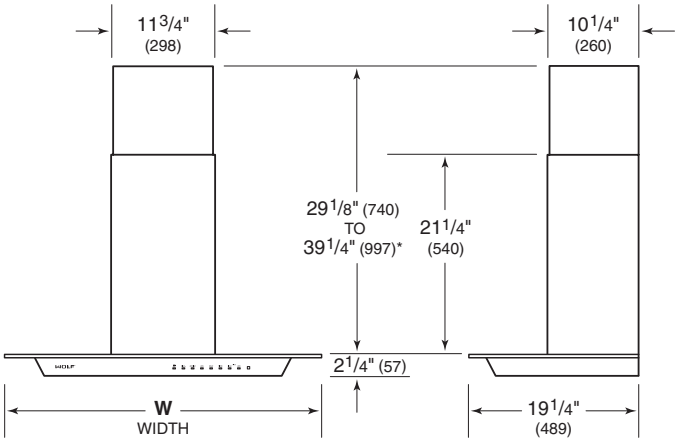

**49 1/8" (1248) to 59 1/4" (1505) with accessory flue extension.*

WIDTH	W
VW36G	36" (914)
VW45G	45" (1143)

ISLAND HOOD—GLASS

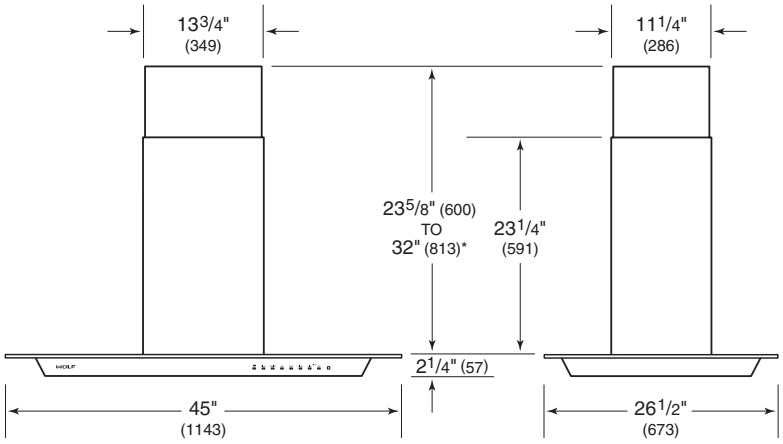

**46 1/4" (1175) to 55" (1397) with accessory flue extension.*

Planning Information

Wolf cooktop ventilation hoods are recommended for use with Wolf induction, electric and gas cooktops, and modules. For ranges and rangetops, a Wolf pro ventilation hood is recommended.

These hoods have a telescopic chimney flue. A flue extension is available through an authorized Wolf dealer.

Installation of the cooktop hood should be 24" (610) to 36" (914) from the bottom of the hood to the countertop.

Wall and island hoods require an internal, in-line, or remote blower assembly, available through an authorized Wolf dealer. For local dealer information, visit the find a showroom section of our website, wolfappliance.com. Refer to Ventilation Suggestions on pages 160–163. Cooktop hoods have a vertical discharge with 6" (152) round duct.

Consult a qualified HVAC professional for specific installation and ducting applications.

ELECTRICAL REQUIREMENTS

Installation must comply with all applicable electrical codes.

For wall hoods, locate the electrical supply within the shaded area shown in the illustration below. For island hoods, locate the electrical supply on the ceiling inside the top of the hood. A separate circuit servicing only this appliance is required.

ELECTRICAL REQUIREMENTS

Electrical Supply	grounded, 110/120 VAC, 60 Hz
Service	15 amp dedicated circuit

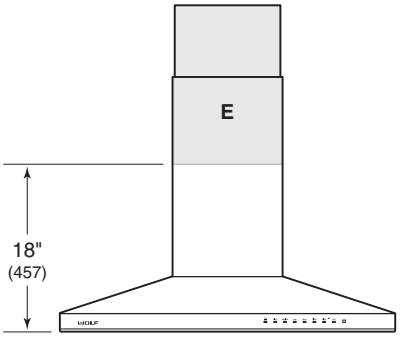

24" (610) TO 36" (914) BOTTOM EDGE TO COUNTERTOP

Electrical location for all wall hoods

Ceiling-Mounted Hood

The new ceiling-mounted hood is our most contemporary ventilation offering, nearly disappearing into its surroundings. It comes in two widths and is available in stainless steel or white glass. The hood ships with a remote control and can be operated using the remote control or the control panel. The control panel is recessed into the right side of the hood. The dishwasher-safe filters can be removed easily for cleaning.

CEILING-MOUNTED HOOD

STAINLESS STEEL

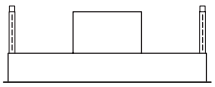

VC36S

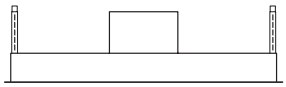

VC48S

WHITE GLASS

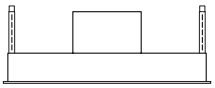

VC36W

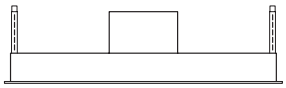

VC48W

Ceiling-Mounted Hood

STAINLESS STEEL

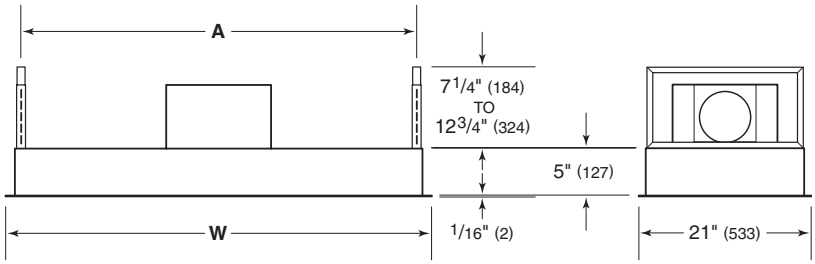

DIMENSIONS	W	A
36" Hood	35 1/2" (902)	33 1/8" (841)
48" Hood	47 1/4" (1200)	44 1/8" (1121)

WHITE GLASS

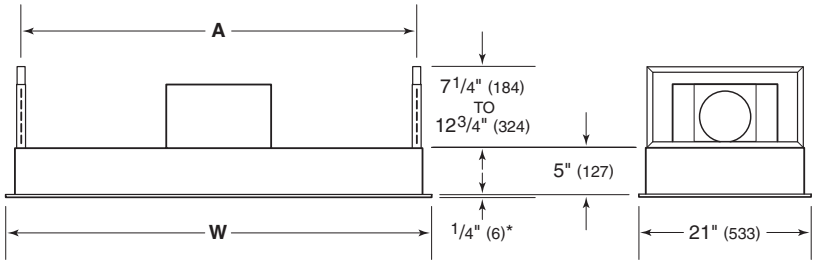

DIMENSIONS	W	A
36" Hood	35 1/2" (902)	33 1/8" (841)
48" Hood	47 1/4" (1200)	44 1/8" (1121)

Planning Information

Installation of the ceiling-mounted hood should be 36" (914) to 84" (2134) from the bottom of the hood to the countertop.

The hood can be operated using the remote control or the control panel located on the right side of the hood.

The hood is shipped without a blower assembly. Internal, in-line, and remote blowers are available through an authorized Wolf dealer. For local dealer information, visit the find a showroom section of our website, wolfappliance.com. Refer to Ventilation Suggestions on pages 160–163.

Ceiling-mounted hoods include a 6" (152) round discharge for internal blowers and a 10" (254) round discharge for in-line and remote blowers. For an internal blower, the blower box can be rotated to discharge right, left, front, or rear. For an in-line or remote blower, the discharge is vertical only.

Consult a qualified HVAC professional for specific installation and ducting applications.

RECIRCULATING INSTALLATION

The ceiling-mounted hood with an internal blower only, can be installed in a recirculating application. The air discharge must be a minimum of 40" (102) from every side of the hood. Refer to the illustration below. The ductwork and vent cover are not provided. A recirculation kit, available through an authorized Wolf dealer, is required.

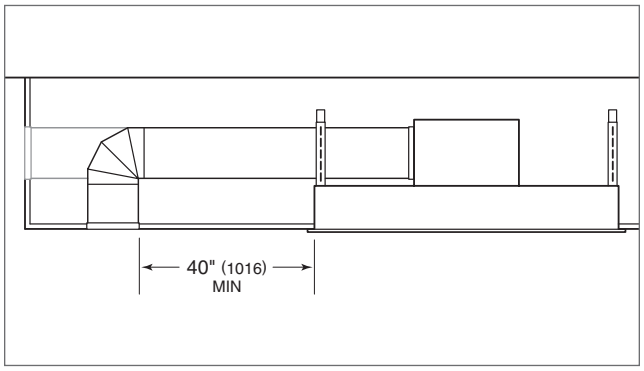

Recirculation application

Planning Information

ELECTRICAL REQUIREMENTS

Installation must comply with all applicable electrical codes.

Locate the electrical supply within the shaded area shown in the illustration below. Allow a minimum 12" (305) Romex® wire for connection. A separate circuit servicing only this appliance is required.

ELECTRICAL REQUIREMENTS	
Electrical Supply	grounded, 120 VAC, 60 Hz
Service	15 amp dedicated circuit

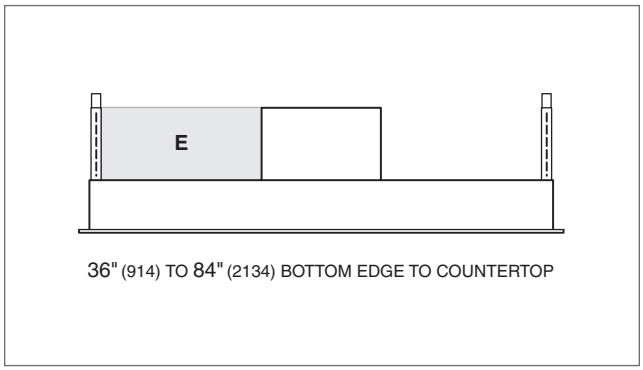

Electrical location

Opening Dimensions

CEILING-MOUNTED HOOD

Refer to the chart and illustrations below for opening dimensions and typical framing. Framing must be able to support a minimum of 100 lb (45 kg).

HOOD	W
36" Hood	34 1/2" (873)
48" Hood	46 1/4" (1175)

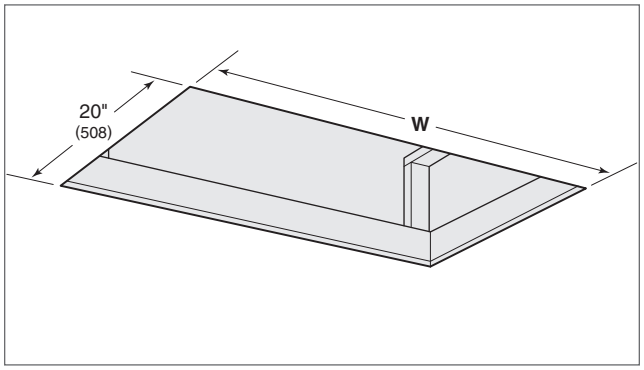

Opening dimensions

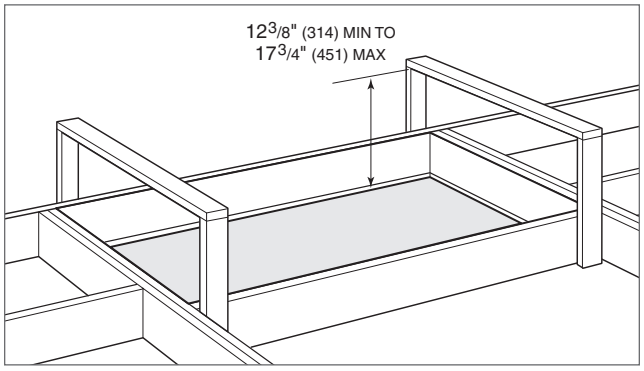

Support framing (typical)

Under-Cabinet Hood Insert

The new under-cabinet hood insert mounts inside a cabinet. It comes in two widths and is available in stainless steel. The hood ships with a remote control and can be operated using the remote control or the control panel. The dishwasher-safe filters can be removed easily for cleaning.

UNDER-CABINET HOOD INSERT

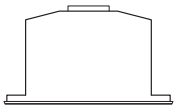

VU24S

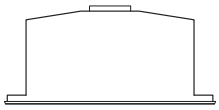

VU30S

Under-Cabinet Hood Insert

DIMENSIONS

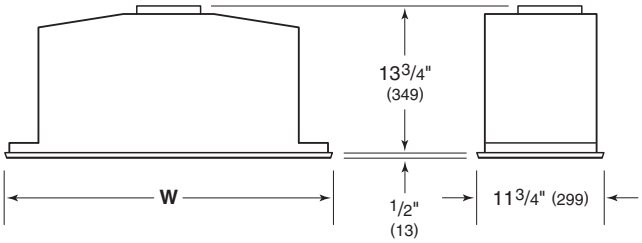

WIDTH	W
24" Hood Insert	20 1/2" (521)
30" Hood Insert	27 5/8" (702)

Planning Information

The under-cabinet hood insert should be installed 24" (610) to 36" (914) from the bottom of the hood to the countertop.

The hood can be operated using the remote control or the control panel located at the front of the hood bottom.

The hood requires a 300 or 600 CFM internal blower, available through an authorized Wolf dealer. For local dealer information, visit the find a showroom section of our website, wolfappliance.com. Refer to Ventilation Suggestions on pages 160–163. The hood includes a 6" (152) round discharge for an internal blower.

Consult a qualified HVAC professional for specific installation and ducting applications.

RECIRCULATION APPLICATION

The hood can be installed in a recirculation application. Refer to the illustration below. Ductwork is not provided.

Recirculating filters, available through an authorized Wolf dealer, are required.

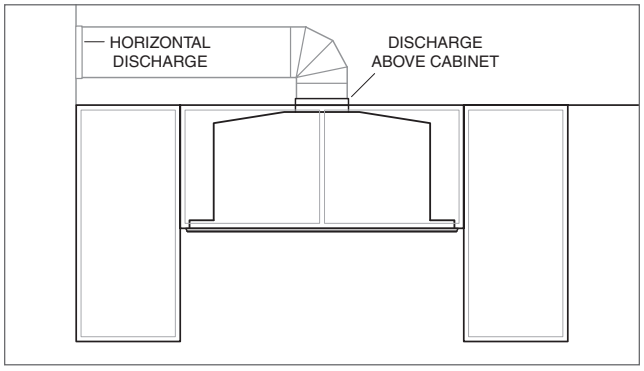

Recirculation application

Planning Information

ELECTRICAL REQUIREMENTS

Installation must comply with all applicable electrical codes.

Locate the electrical supply above or in an adjacent cabinet within reach of the power cord. Refer to the illustration below. A separate circuit servicing only this appliance is required.

ELECTRICAL REQUIREMENTS	
Electrical Supply	grounded, 120 VAC, 60 Hz
Service	15 amp dedicated circuit
Power Cord	4' (1.2 m)

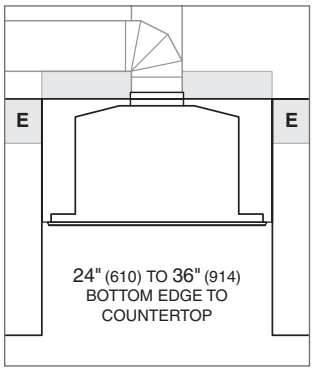

Electrical location

Opening Dimensions

UNDER-CABINET HOOD INSERT

Refer to the chart and illustration below for opening dimensions. The cabinet must be able to support a minimum of 100 lb (45 kg).

OPENING WIDTH	W
24" Hood Insert	19 1/2" (495)
30" Hood Insert	26 5/8" (676)

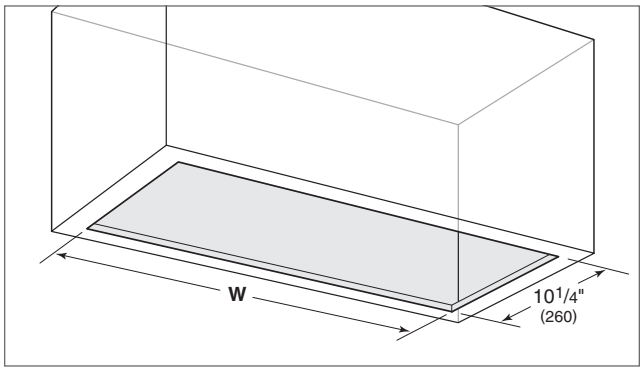

Opening dimensions

Downdraft Ventilation

Constructed of heavy duty stainless steel, the Wolf downdraft rises from the countertop to whisk away odor and smoke into stainless steel, mesh filters and can be lowered beneath the countertop when not in use. Downdrafts integrate perfectly with transitional induction and electric cooktops, gas cooktops, and some modules, they can also be installed with certain sealed burner rangetops.

DOWNDRAFTS

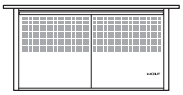

DD30

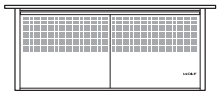

DD36

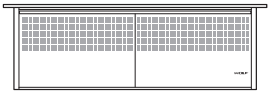

DD45

Downdrafts

DIMENSIONS

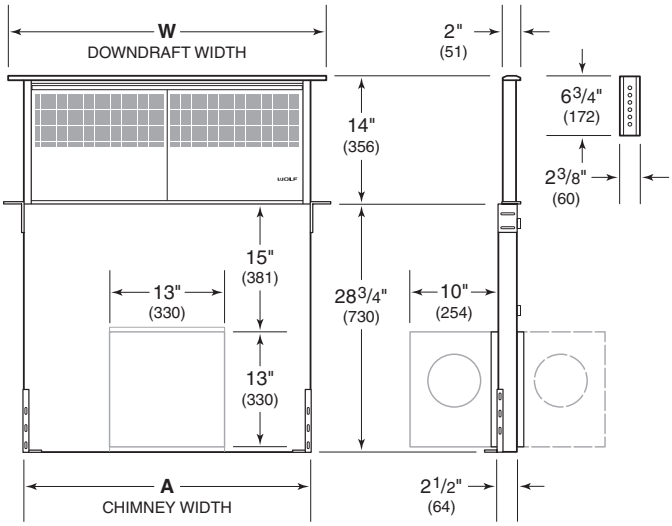

NOTE: Shown with front mounted internal blower with 6" (152) round discharge, dashed line represents rear mount.

WIDTH	W	A
DD30	30" (762)	26 1/2" (673)
DD36	36" (914)	32 1/2" (826)
DD45	45" (1143)	38 1/2" (978)

Planning Information

Wolf downdrafts can be installed with most Wolf cooktops, but are not compatible with the grill, steamer, and fryer modules. Downdrafts can be installed with sealed burner rangetop models SRT304 and SRT366.

For installation with a Wolf cooktop, a minimum 25 1/8" (638) deep flat countertop is required.

For installation with a sealed burner rangetop or 30" (762) or 36" (914) contemporary cooktop, an accessory trim kit is required. Contact an authorized Wolf dealer for details. For local dealer information, visit the find a showroom section of our website, wolfappliance.com.

The remote-mounted control module can be positioned horizontally or vertically. It must be located within 9' (2.7 m) of the downdraft assembly and a minimum 3" (76) from the edge of the cooktop cutout.

Consult a qualified HVAC professional for specific installation and ducting applications.

BLOWERS

Internal, in-line, and remote blowers are available through an authorized Wolf dealer. For local dealer information, visit the find a showroom section of our website, wolfappliance.com. Refer to Ventilation Suggestions on pages 160–163.

Internal blowers have a 6" (152) round discharge, can be front or rear mounted, and can be discharged in any direction by rotating the blower box. In-line and remote blowers have a 10" (254) discharge and can be discharged from the front or rear.

ELECTRICAL REQUIREMENTS

Installation must comply with all applicable electrical codes.

Locate the electrical supply as shown in the illustrations on the following pages. A separate circuit servicing only this appliance is required. A ground fault circuit interrupter (GFCI) is not recommended and may cause interruption of operation.

Certain installations may require the electrical supply be placed in an adjacent cabinet.

ELECTRICAL REQUIREMENTS

Electrical Supply	grounded, 120 VAC, 60 Hz
Service	15 amp dedicated circuit
Receptacle	3-prong grounding-type
Power Cord	2 1/2' (.8 m)

Downdraft

INSTALLATION WITH STANDARD INSTALLED COOKTOP

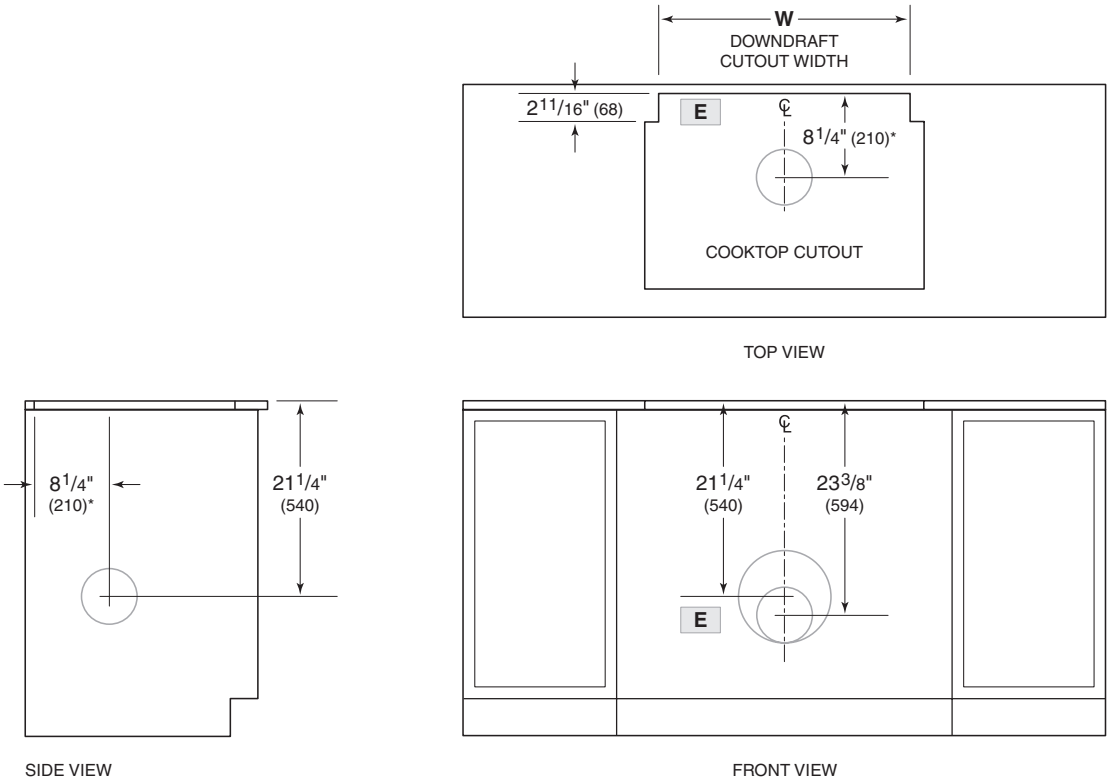

**6" (152) back from countertop cutout when internal blower is rear mounted.*

NOTE: Internal blower 6" (152) round, side, rear or bottom discharge. In-line and remote blower 10" (254) round, rear discharge. Centerline indicates center of downdraft cutout.

CUTOUT WIDTH	W
DD30	27 1/2" (699)
DD36	33 1/2" (851)
DD45	39 1/2" (1003)

Downdraft

INSTALLATION WITH FLUSH INSTALLED COOKTOP

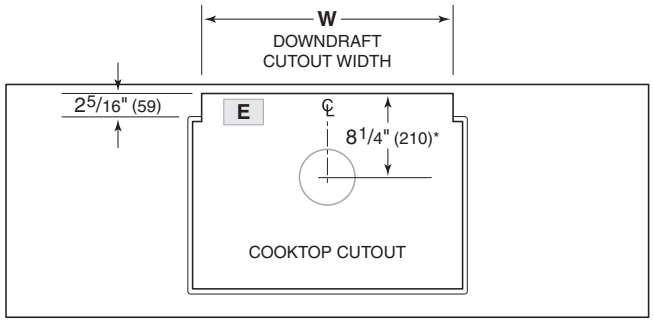

TOP VIEW

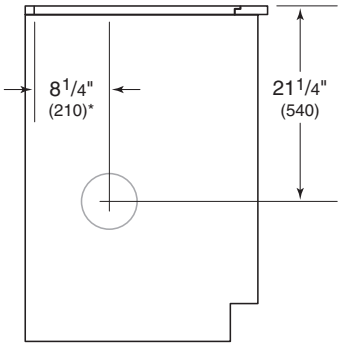

SIDE VIEW

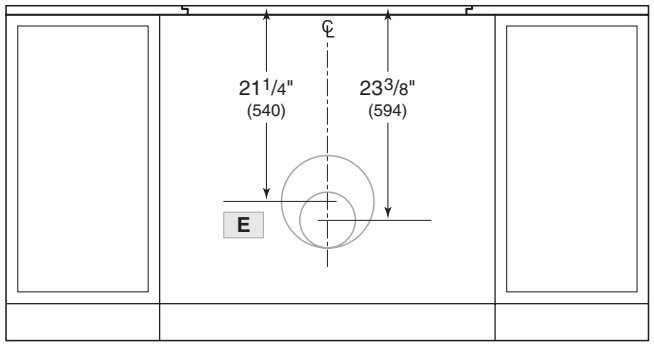

FRONT VIEW

**6" (152) back from countertop cutout when internal blower is rear mounted.*

NOTE: Internal blower 6" (152) round, side, rear, or bottom discharge. In-line and remote blower 10" (254) round, rear discharge. Centerline indicates center of downdraft cutout.

CUTOUT WIDTH	W
DD30	27 1/2" (699)
DD36	33 1/2" (851)

Downdraft

INSTALLATION WITH SEALED BURNER RANGETOP

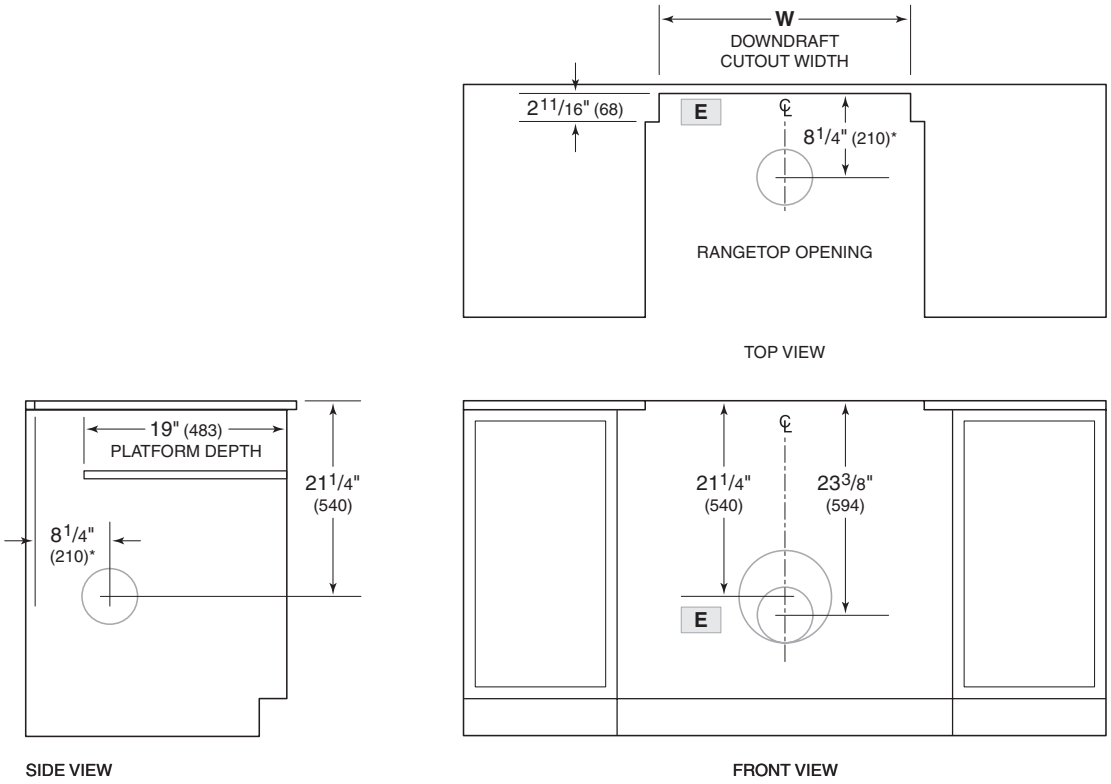

**6" (152) back from countertop cutout when internal blower is rear mounted.*

NOTE: Internal blower 6" (152) round, side, rear, or bottom discharge. In-line and remote blower 10" (254) round, rear discharge. Centerline indicates center of downdraft cutout.

CUTOUT WIDTH	W
DD30	27 1/2" (699)
DD36	33 1/2" (851)

WOLF

Pro Ventilation Hoods

Professional heritage shines through in Wolf professional-style ventilation. Exteriors are heavy-duty, welded stainless steel, so finely hand-finished they appear seamless. Pro wall and island hoods are available in a variety of widths. Stainless steel baffle filters and halogen lighting extend the professional look and back it up with pro-level performance. All pro ventilation hoods are crafted of stainless steel. A hood liner is also available for custom applications.

PRO HOODS

WALL HOODS

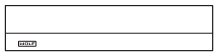

LOW-PROFILE

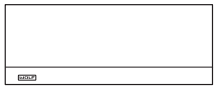

24"/27" DEEP

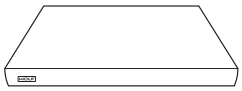

CHIMNEY

ISLAND HOOD

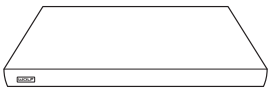

ISLAND

HOOD LINER

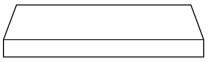

19"/22" DEEP

Pro Hoods

LOW-PROFILE WALL HOOD

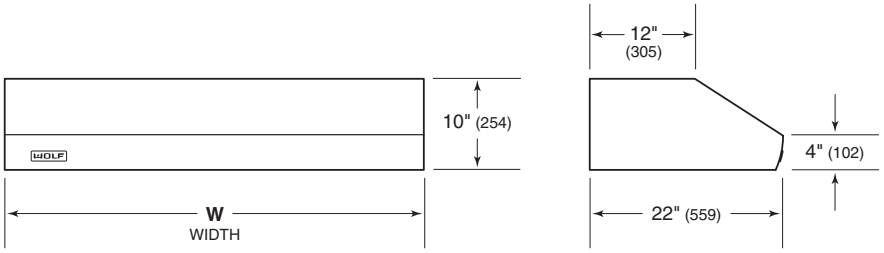

24" DEEP WALL HOOD

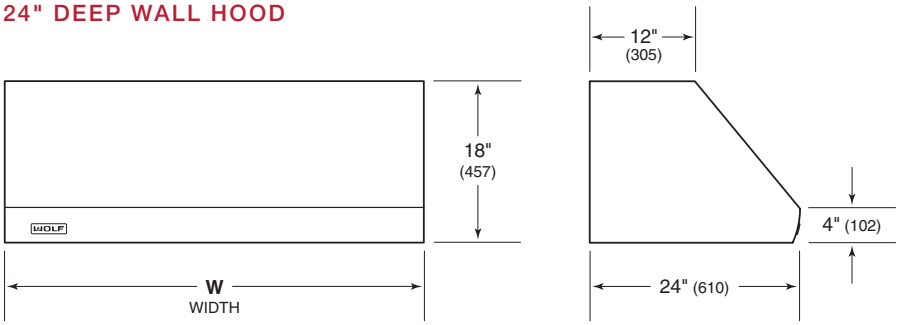

27" DEEP WALL HOOD

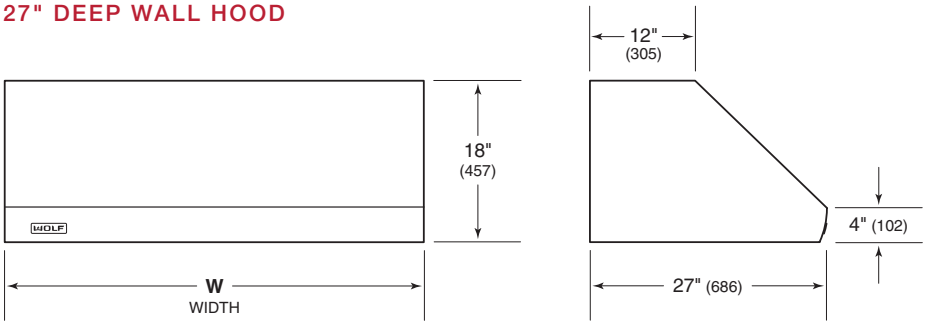

WIDTH

LOW-PROFILE WALL HOOD	W
	30" (762), 36" (914), 42" (1067), 48" (1219)
24" DEEP WALL HOOD	W
	30" (762), 36" (914), 42" (1067), 48" (1219)
	54" (1372), 60" (1524), 66" (1676)
27" DEEP WALL HOOD	W
	30" (762), 36" (914), 42" (1067), 48" (1219)
	54" (1372), 60" (1524), 66" (1676)

Pro Hoods

WALL CHIMNEY HOOD

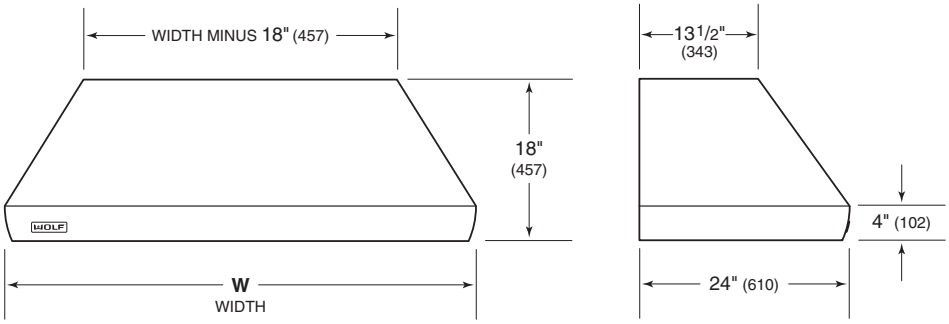

ISLAND HOOD

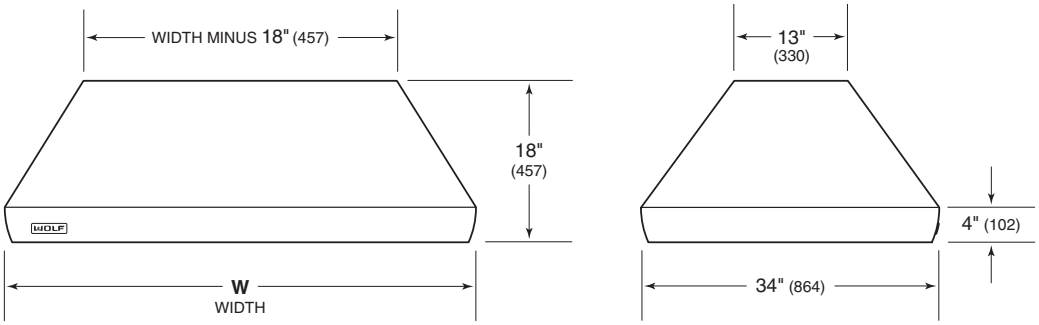

HOOD LINER

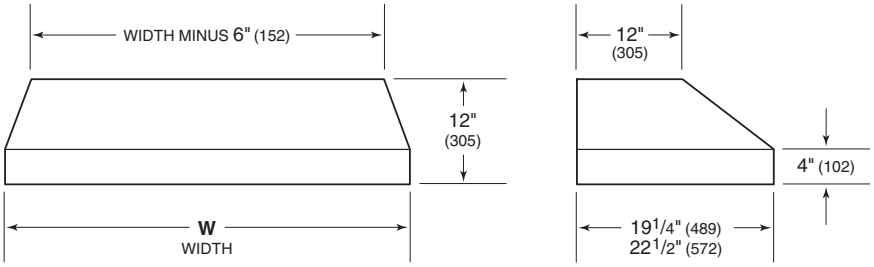

WIDTH

WALL CHIMNEY HOOD	W
	36" (914), 42" (1067), 48" (1219), 54" (1372)
ISLAND HOOD	W
	36" (914), 42" (1067), 54" (1372), 66" (1676)
HOOD LINER	W
	34 3/8" (873), 40 3/8" (1026), 46 3/8" (1178) 52 3/8" (1330), 58 3/8" (1483)

Planning Information

Pro ventilation hoods and hood liners are recommended for use with all Wolf cooking appliances. Wall hoods should be at least as wide as the cooking surface and island hoods should be 3" (76) wider on each side.

For optimal performance in wall hood applications, a pro 27" deep wall hood is recommended for use with ranges and rangetops with a charbroiler or griddle.

Installation of the hood should be 30" (762) to 36" (914) from the bottom of the hood to the countertop.

Pro hoods and hood liners are shipped without a blower assembly. Internal, in-line, and remote blowers are available through an authorized Wolf dealer. For local dealer information, visit the find a showroom section of our website, wolfappliance.com. The blower will vary in size and is dictated by the cooking unit, volume of air, and length of the duct run. Refer to Ventilation Suggestions on pages 160–163.

Pro hoods accommodate a 10" (254) round duct. Low-profile wall hoods allow for an adjustable discharge. All other pro hoods have a vertical discharge. For the 24" and 27" deep wall hoods, a horizontal discharge kit is available through an authorized Wolf dealer.

Consult a qualified HVAC professional for specific installation and ducting applications.

Optional stainless steel duct covers in a variety of heights are available for pro wall and island hoods through an authorized Wolf dealer.

ELECTRICAL REQUIREMENTS

Installation must comply with all applicable electrical codes.

Locate the electrical supply as shown in the illustrations on the following page. A separate circuit servicing only this appliance is required.

ELECTRICAL REQUIREMENTS

Electrical Supply	grounded, 120 VAC, 60 Hz
Service	15 amp dedicated circuit

RECIRCULATING INSTALLATION

Low-profile, 24" deep, and 27" deep wall hoods with an internal blower (600 CFM or less), 30" (762) and 36" (914) widths only, can be used in a non-ducted application with a recirculating filter. In this installation, kitchen air is purified through the filters and returned as clean air into the room. A recirculation kit, available through an authorized Wolf dealer, is required.

CUSTOM HOOD APPLICATIONS

Wolf pro hood liners are for use in custom hood applications. The decorative hood can be created out of wood, plaster, tile, or metal. The shape of the hood is not critical, however, the bottom of the hood and liner must be on the same plane. The height of the liner does not need to accommodate the entire height of the decorative hood.

Installation

LOW-PROFILE / 24" DEEP / 27" DEEP WALL HOOD

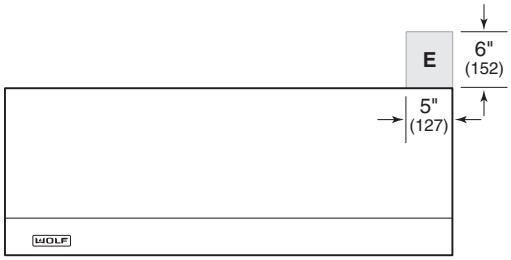

30" (762) TO 36" (914) BOTTOM EDGE TO COUNTERTOP

WALL CHIMNEY HOOD

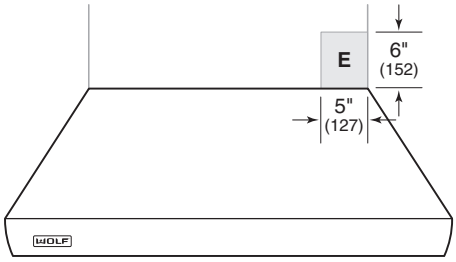

30" (762) TO 36" (914) BOTTOM EDGE TO COUNTERTOP

ISLAND HOOD

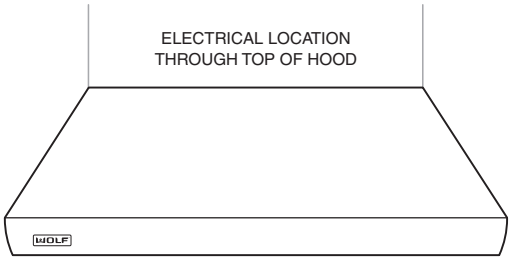

30" (762) TO 36" (914) BOTTOM EDGE TO COUNTERTOP

HOOD LINER

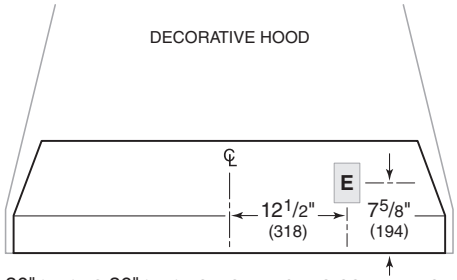

30" (762) TO 36" (914) BOTTOM EDGE TO COUNTERTOP

Blower Assemblies

For Wolf ventilation hoods and downdrafts that do not include a blower assembly, an internal, in-line, or remote blower assembly must be selected to accommodate the cooking appliance, CFM requirements, and homeowner preferences. Internal, in-line, and remote blowers are available through an authorized Wolf dealer. For local dealer information, visit the find a showroom section of our website, wolfappliance.com.

Ventilation suggestions on the following pages provide Wolf product CFM and blower options for each ventilation hood and downdraft.

Refer to the illustrations below for dimensions of Wolf in-line and remote blowers. Installation instructions shipped with each Wolf ventilation product provide detailed specifications. These instructions can also be found on our website, wolfappliance.com/specs.

600 CFM IN-LINE

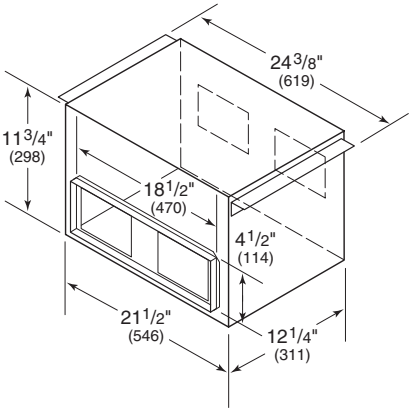

1100 CFM IN-LINE

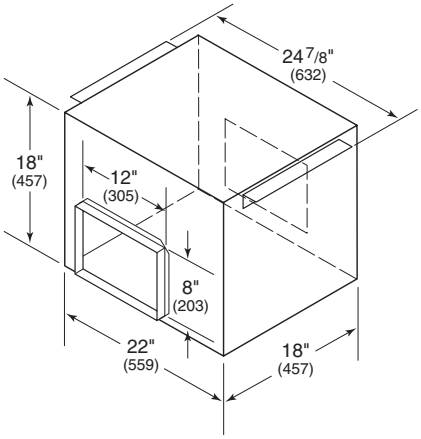

600 / 900 CFM REMOTE

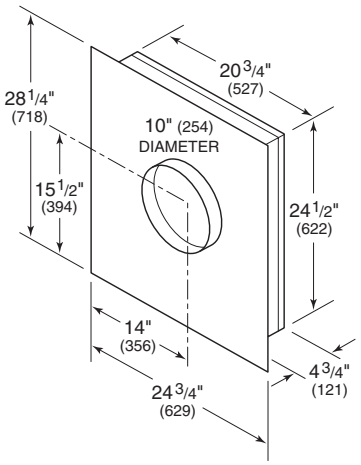

1200 CFM REMOTE

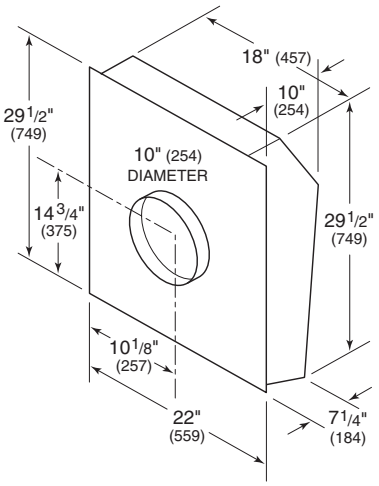

1500 CFM REMOTE

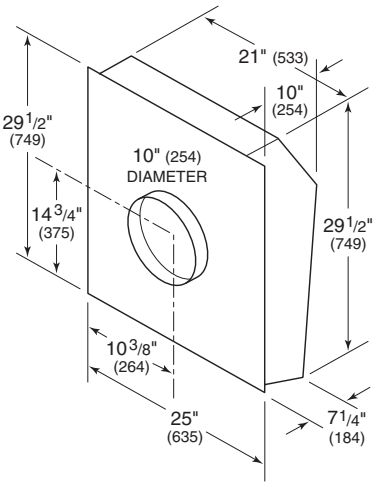

Wolf Product CFM

CFM	COOKTOP HOOD	DOWNDRAFT	PRO HOOD
COOKTOP / MODULE			
CI152TF/S CE152TF/S CG152TF/S	300	600	300
SM15TF/S FM15TF/S GM15TF/S	300		300
TM15TF/S MM15TF/S	300	600	300
CI243TF/S CI243C/B CG243TF/S	300		300
CI304TF/S CI304T/S CI304C/B	300	600	300
CE304T/S CE304C/B	300	600	300
CG304T/S CG304P/S	300	600	300
CI365TF/S CI365T/S CI365C/B	300	600	300
CE365T/S CE365C/B	300	600	300
CG365T/S CG365P/S CG365C/S	300	600	300
DUAL FUEL RANGE			
DF304			500
DF366 DF364C DF364G			900
DF486C DF486G DF484CG DF484DG DF484F			1100
DF606CG DF606DG DF606F DF604CF DF604GF			1500
GAS RANGE			
GR304			500
GR366 GR364C GR364G			900
GR488 GR486C GR486G GR484CG GR484DG			1100
GR606CG GR606DG GR606F			1500
INDUCTION RANGE			
IR304	300		300
IR365	300		300
SEALED BURNER RANGETOP			
SRT304		600	500
SRT366		600	900
SRT364C SRT364G			900
SRT486C SRT486G SRT484CG SRT484DG SRT484F			900

Wolf Ventilation Blower Options

INTERNAL BLOWER (CFM)	300 INT*	450 INT*	500 INT	600 INT	900 INT	1200 INT
COOKTOP HOOD						
VW30B VW36B VW45B VI42B	•			•		
VW30S VW36S VI42S	•			•		
VW36G VW45G VI45G	•			•		
CEILING-MOUNTED HOOD						
VC36S VC36W VC48S VC48W				•		
UNDER-CABINET HOOD INSERT						
VU24S VU30S	•			•		
DOWNDRAFT						
DD30 DD36 DD45				•		
PRO LOW-PROFILE WALL HOOD						
PW302210 PW362210			•			
PW422210 PW482210			•			
PRO 24" WALL HOOD						
PW302418 PW362418 PW422418	•	•		•	•	•
PW482418 PW542418	•	•		•	•	•
PW602418 PW662418	•	•		•	•	•
PRO 27" WALL HOOD						
PW302718 PW362718 PW422718	•	•		•	•	•
PW482718 PW542718	•	•		•	•	•
PW602718 PW662718	•	•		•	•	•
PRO WALL CHIMNEY HOOD						
PWC362418 PWC422418	•	•		•	•	•
PWC482418 PWC542418	•	•		•	•	•
PRO ISLAND HOOD						
PI363418 PI423418	•	•		•	•	•
PI543418	•	•		•	•	•
PI663418	•	•		•	•	•
PRO HOOD LINER						
PL341912 PL342212 PL401912 PL402212	•	•		•	•	•
PL461912 PL462212	•	•		•	•	•
PL521912 PL522212	•	•		•	•	•
PL581912 PL582212	•	•		•	•	•

**For make-up air restricted applications. Capture and performance may be reduced.*

Wolf Ventilation Blower Options

IN-LINE / REMOTE BLOWER (CFM)	600 IL	1100 IL	600 REM	900 REM	1200 REM	1500 REM
COOKTOP HOOD						
VW30B VW36B VW45B VI42B	•		•			
VW30S VW36S VI42S	•		•		•	
VW36G VW45G VI45G	•		•			
CEILING-MOUNTED HOOD						
VC36S VC36W VC48S VC48W	•		•		•	
UNDER-CABINET HOOD INSERT						
VU24S VU30S						
DOWNDRAFT						
DD30 DD36 DD45	•		•		•	
PRO LOW-PROFILE WALL HOOD						
PW302210 PW362210	•	•	•	•	•	•
PW422210 PW482210	•	•	•	•	•	•
PRO 24" WALL HOOD						
PW302418	•	•	•	•	•	•
PW362418 PW422418 PW482418 PW542418	•	•	•	•	•	•
PW602418 PW662418	•	•	•	•	•	•
PRO 27" WALL HOOD						
PW302718	•	•	•	•	•	•
PW362718 PW422718 PW482718 PW542718	•	•	•	•	•	•
PW602718 PW662718	•	•	•	•	•	•
PRO WALL CHIMNEY HOOD						
PWC362418 PWC422418	•	•	•	•	•	•
PWC482418 PWC542418	•	•	•	•	•	•
PRO ISLAND HOOD						
PI363418 PI423418	•	•	•	•	•	•
PI543418	•	•	•	•	•	•
PI663418	•	•	•	•	•	•
PRO HOOD LINER						
PL341912 PL342212 PL401912 PL402212	•	•	•	•	•	•
PL461912 PL462212	•	•	•	•	•	•
PL521912 PL522212	•	•	•	•	•	•
PL581912 PL582212	•	•	•	•	•	•

Wolf Product Shipping Weight

SHIPPING WEIGHT	
BUILT-IN OVEN	**LB (KG)**
24" Single Oven	80 (36)
30" Single Oven	273 (124)
30" Double Oven	466 (211)
36" Single Oven	288 (131)
CONVECTION STEAM OVEN	**LB (KG)**
24" Oven	80 (36)
30" Oven	80 (36)
MICROWAVE OVEN	**LB (KG)**
24" Drop-Down Door Microwave	80 (36)
30" Drop-Down Door Microwave	80 (36)
24" Drawer Microwave	91 (41)
30" Drawer Microwave	96 (44)
Convection Microwave	68 (31)
Standard Microwave	50 (23)
WARMING DRAWER	**LB (KG)**
30" Warming Drawer	100 (45)

SHIPPING WEIGHT	
INDUCTION COOKTOP	**LB (KG)**
24" Cooktop	42 (19)
30" Cooktop	49 (22)
36" Cooktop	61 (28)
ELECTRIC COOKTOP	**LB (KG)**
30" Cooktop	45 (20)
36" Cooktop	60 (27)
GAS COOKTOP	**LB (KG)**
24" Cooktop	36 (16)
30" Cooktop	50 (23)
36" Cooktop	67 (30)
MODULE	**LB (KG)**
Induction Module	30 (14)
Electric Module	30 (14)
Steamer Module	40 (18)
Fryer Module	30 (14)
Grill Module	50 (23)
Teppanyaki Module	41 (19)
Gas Module	30 (14)
Multifunction Module	30 (14)
COFFEE SYSTEM	**LB (KG)**
24" Coffee System	80 (36)

Wolf Product Shipping Weight

SHIPPING WEIGHT	
DUAL FUEL RANGE	**LB (KG)**
30" Range	325 (147)
36" Range	445–470 (202–213)
48" Range	665–750 (302–340)
60" Range	875–950 (397–431)
GAS RANGE	**LB (KG)**
30" Range	325 (147)
36" Range	445–470 (202–213)
48" Range	650–750 (295–340)
60" Range	875–950 (397–431)
INDUCTION RANGE	**LB (KG)**
30" Range	325 (147)
36" Range	470 (213)
SEALED BURNER RANGETOP	**LB (KG)**
30" Rangetop	160 (73)
36" Rangetop	190–220 (86–100)
48" Rangetop	240–280 (109–127)
OUTDOOR GRILL/MODULE	**LB (KG)**
30" Grill	216 (98)
36" Grill	247 (112)
42" Grill	270 (122)
54" Grill	350 (159)
Side Burner	50 (23)
Burner Module	50 (23)

SHIPPING WEIGHT	
COOKTOP VENTILATION	**LB (KG)**
30" Wall Hood	53–85 (24–39)
36" Wall Hood	57–100 (26–45)
45" Wall Hood	62 (28)
42" Island Hood	92–110 (42–50)
45" Island Hood	92 (42)
CEILING-MOUNTED HOOD	**LB (KG)**
36" Hood	61 (28)
48" Hood	65 (29)
UNDER-CABINET HOOD INSERT	**LB (KG)**
24" Hood Insert	20 (9)
30" Hood Insert	25 (11)
DOWNDRAFT VENTILATION	**LB (KG)**
30" Downdraft	75 (34)
36" Downdraft	80 (36)
45" Downdraft	85 (39)
PRO VENTILATION	**LB (KG)**
Low-Profile Wall Hood	39–55 (18–25)
24" Deep Wall Hood	84–148 (38–67)
27" Deep Wall Hood	92–163 (42–74)
Wall Chimney Hood	78–106 (35–48)
Island Hood	95–168 (43–76)
Hood Liner	39–65 (18–29)

Sub-Zero, Sub-Zero & Design, Sub-Zero & Snowflake Design, Dual Refrigeration, The Living Kitchen, Great American Kitchens The Fine Art of Kitchen Design, Wolf, Wolf & Design, Wolf Gourmet, W & Design, red colored knobs, Cove, and Cove & Design are registered trademarks and service marks of Sub-Zero Group, Inc. and its subsidiaries. All other trademarks are property of their respective owners in the United States and other countries.

Wolf Appliance Residential Limited Warranty

FOR RESIDENTIAL USE

FULL TWO YEAR WARRANTY*

For two years from the date of original installation, this Wolf Appliance product warranty covers all parts and labor to repair or replace, under normal residential use, any part of the product that proves to be defective in materials or workmanship. All service provided by Wolf Appliance under the above warranty must be performed by Wolf factory certified service, unless otherwise specified by Wolf Appliance, Inc. Service will be provided during normal business hours.

LIMITED FIVE YEAR WARRANTY

For five years from the date of original installation, Wolf Appliance will repair or replace the following parts that prove to be defective in materials or workmanship: gas burners (excludes appearance), electric heating elements, blower motors (ventilation hoods), electronic control boards, magnetron tubes and induction generators. If the owner uses Wolf factory certified service, the service provider will repair or replace these parts with the owner paying for all other costs, including labor. If the owner uses non-certified service, the owner must contact Wolf Appliance, Inc. (using the information below) to receive repaired or replacement parts. Wolf Appliance will not reimburse the owner for parts purchased from non-certified service or other sources.

TERMS APPLICABLE TO EACH WARRANTY

The warranty applies only to products installed for normal residential use. The warranty applies only to products installed in any one of the fifty states of the United States, the District of Columbia or the ten provinces of Canada. This warranty does not cover any parts or labor to correct any defect caused by negligence, accident or improper use, maintenance, installation, service or repair.

THE REMEDIES DESCRIBED ABOVE FOR EACH WARRANTY ARE THE ONLY ONES THAT WOLF APPLIANCE, INC. WILL PROVIDE, EITHER UNDER THIS WARRANTY OR UNDER ANY WARRANTY ARISING BY OPERATION OF LAW. WOLF APPLIANCE, INC. WILL NOT BE RESPONSIBLE FOR ANY CONSEQUENTIAL OR INCIDENTAL DAMAGES ARISING FROM THE BREACH OF THIS WARRANTY OR ANY OTHER WARRANTY, WHETHER EXPRESS, IMPLIED OR STATUTORY.

Some states do not allow the exclusion or limitation of incidental or consequential damages, so the above limitation or exclusion may not apply to you. This warranty gives you specific legal rights and you may also have other legal rights that vary from state to state.

To receive parts and/or service and the name of Wolf factory certified service nearest you, contact Wolf Appliance, Inc., P.O. Box 44848, Madison, WI 53744; check the contact & support section of our website, wolfappliance.com, email us at customerservice@subzero.com or call 800-222-7820.

*Stainless steel (doors, panels, handles, product frames and interior surfaces) are covered by a limited 60-day parts and labor warranty for cosmetic defects.

*Replacement filters for ventilation hood recirculating kits are not covered by the product warranty.

Wolf Appliance Outdoor Limited Warranty*

FOR RESIDENTIAL USE

FULL ONE YEAR WARRANTY**

For one year from the date of original installation, this Wolf Appliance product warranty covers all parts and labor to repair or replace, under normal residential use, any part of the product that proves to be defective in materials or workmanship. All service provided by Wolf Appliance under the above warranty must be performed by Wolf factory certified service, unless otherwise specified by Wolf Appliance, Inc. Service will be provided during normal business hours.

LIMITED FIVE YEAR WARRANTY

For five years from the date of original installation, Wolf Appliance will repair or replace the following parts that prove to be defective in materials or workmanship: stainless steel briquette trays, gas valves, drip pans, electronic control boards and electric heating elements. If the owner uses Wolf factory certified service, the service provider will repair or replace these parts with the owner paying for all other costs, including labor. If the owner uses non-certified service, the owner must contact Wolf Appliance, Inc. (using the information below) to receive repaired or replacement parts. Wolf Appliance will not reimburse the owner for parts purchased from non-certified service or other sources.

LIMITED LIFETIME WARRANTY

For the life of the product, Wolf Appliance will repair or replace the following parts that prove to be defective in materials or workmanship: all stainless steel components (excludes surface corrosion, scratches, discoloration, weather and atmospheric related staining and minor surface rust and oxidation). If the owner uses Wolf factory certified service, the service provider will repair or replace these parts with the owner paying for all other costs, including labor. If the owner uses non-certified service, the owner must contact Wolf Appliance, Inc. (using the information below) to receive repaired or replacement parts. Wolf Appliance will not reimburse the owner for parts purchased from non-certified service or other sources.

TERMS APPLICABLE TO EACH WARRANTY

The warranty applies only to products installed for normal residential use. The warranty applies only to products installed in any one of the fifty states of the United States, the District of Columbia or the ten provinces of Canada. This warranty does not cover any parts or labor to correct any defect caused by negligence, accident or improper use, maintenance, installation, service or repair.

THE REMEDIES DESCRIBED ABOVE FOR EACH WARRANTY ARE THE ONLY ONES THAT WOLF APPLIANCE, INC. WILL PROVIDE, EITHER UNDER THIS WARRANTY OR UNDER ANY WARRANTY ARISING BY OPERATION OF LAW. WOLF APPLIANCE, INC. WILL NOT BE RESPONSIBLE FOR ANY CONSEQUENTIAL OR INCIDENTAL DAMAGES ARISING FROM THE BREACH OF THIS WARRANTY OR ANY OTHER WARRANTY, WHETHER EXPRESS, IMPLIED OR STATUTORY.

Some states do not allow the exclusion or limitation of incidental or consequential damages, so the above limitation or exclusion may not apply to you. This warranty gives you specific legal rights and you may also have other legal rights that vary from state to state.

To receive parts and/or service and the name of Wolf factory certified service nearest you, contact Wolf Appliance, Inc., P.O. Box 44848, Madison, WI 53744; check the contact & support section of our website, wolfappliance.com, email us at customerservice@subzero.com or call 800-222-7820.

*Product must be approved for outdoor use, designated by model and serial number.

**Stainless steel (doors, panels, handles, product frames and interior surfaces) are covered by a limited 60-day parts and labor warranty for cosmetic defects.

WOLFAPPLIANCE.COM