15" Marvel Beverage Center

Model # ML15BC

Performance

- Dynamic Cooling Technology™ delivers the industry's best temperature stability and rapid cool down, tested and proven to cool nearly 2x faster than competitors
- Thermal-efficient cabinet ensures optimum preservation and energy efficiency while maximizing capacity
- Argon-filled, UV-resistant tinted dual pane glass door protects contents from damaging ultraviolet light, while conserving energy
- Now even quieter operation thanks to exclusive design enhancements to buffer and minimize sound

Storage Capabilities

- 2.7 cu. ft. capacity, stores (72) 12-oz cans and 3 wine bottles
- Black steel-framed glass shelves are cantilevered and fully adjustable
- Includes (1) 3-in-1 Convertible Shelf™ featuring removable glass pane with wine rack option
- Store food, beverages, or wine

Touchpad Controls

- Multifunction Marvel Intuit™ Integrated Controls allow you to select a precise cabinet temperature from 34° F to 42° F
- Vacation mode conserves energy during times when unit is not in use

Aesthetics

- Two-stage, arctic white theater-style LED lighting and midnight black interior
- Easy-to-install panel overlay option features soft-close integrated hinge for a truly flush fit with cabinetry
- Finish options: stainless steel, black or overlay (panel ready)

Additional Convenience

- Close Door Assist System™ gently and automatically draws door to a close, ensuring door is never accidentally left ajar
- Black toe kick adjustable to 4" with leveling legs
- Filler kit available for 18" wide opening
- 1-year parts and labor warranty, 5-year sealed system parts warranty

Ordering Options

Stainless Frame, Glass Door, Right Hinge, Stainless Designer Handle	ML15BCG2RS
Stainless Frame, Glass Door, Left Hinge, Stainless Designer Handle	ML15BCG2LS
Black Frame, Glass Door, Right Hinge, Stainless Designer Handle	ML15BCG2RB
Black Frame, Glass Door, Left Hinge, Stainless Designer Handle	ML15BCG2LB
Panel-Ready Framed Glass Door, Integrated Right Hinge (Handle Not Included)*	ML15BCF3RP
Panel-Ready Framed Glass Door, Integrated Left Hinge (Handle Not Included)*	ML15BCF3LP
Panel-Ready Solid Overlay Door, Integrated Right Hinge (Handle Not Included)*	ML15BCP3RP
Panel-Ready Solid Overlay Door, Integrated Left Hinge (Handle Not Included)*	ML15BCP3LP

*Easy installation! No panel kit required. Consult your cabinet maker for overlay panel and handle options.

Finish Options

Stainless Steel

Framed Overlay (Panel Ready)*

Solid Overlay (Panel Ready)*

Black Frame

Product Dimensions

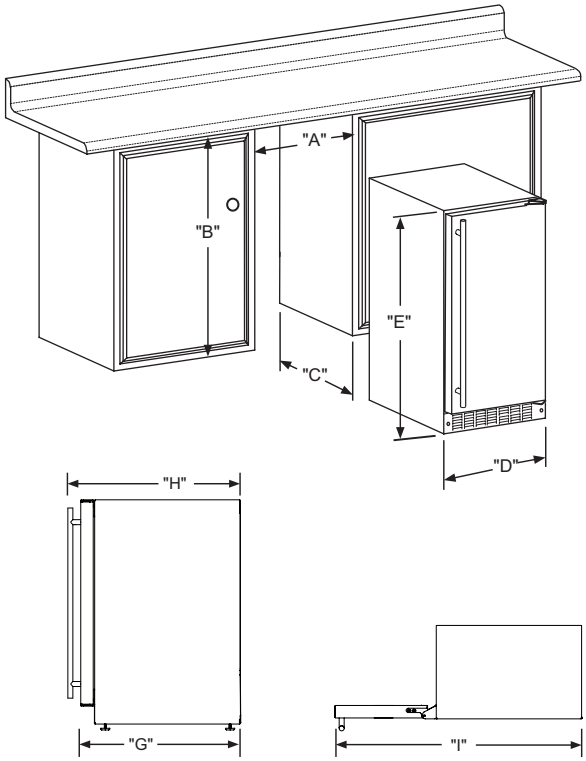

Panel Overlay Dimensions (Frame Door)

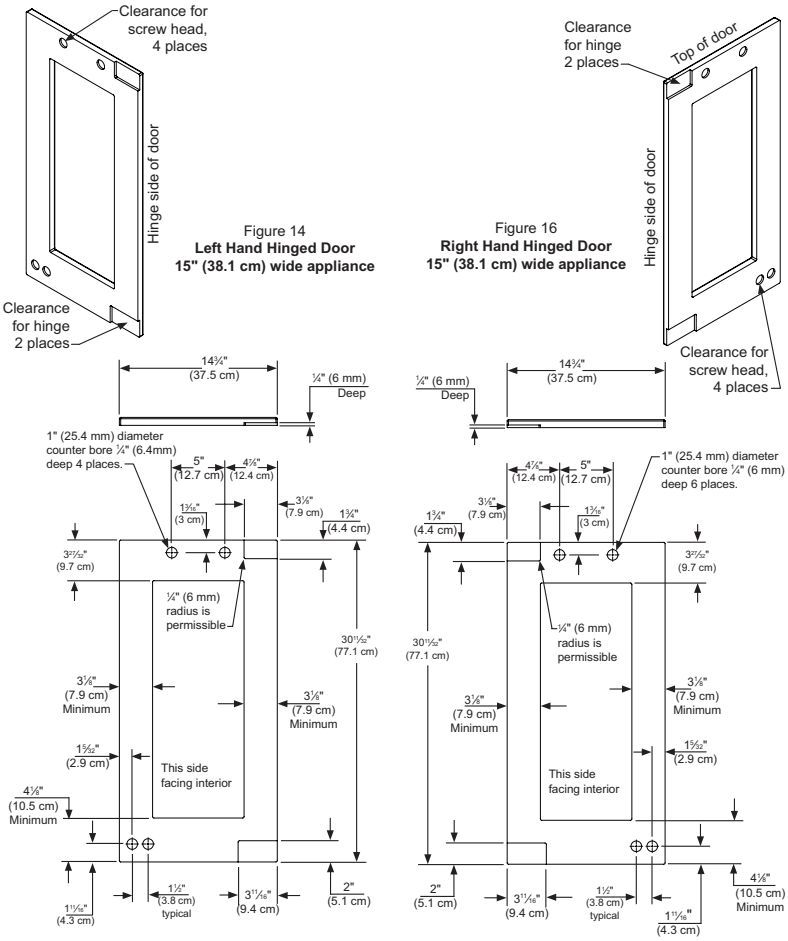

Rough-In Dimensions

A. Rough-In Width	15″	
B. Rough-In Height	Solid Door	34″ to 35″
	Overlay Door	34″ 1/4 to 35″ 1/4
C. Rough-In Depth	24″	

Product Dimensions

D. Width	14 7/8″	
E. Height	Solid Door	33 3/4″ to 34 3/4″
	Overlay Door	34″ to 35″
F. Depth	21 1/2″	
G. Depth to Front of Door	Solid Door	23 23/32″
	Overlay Door	22 7/8″ Without Handle
H. Depth to Handle	25 21/32″ (Stainless Steel)	
I. Depth with door at 90˚	Solid Door	37 13/32″
	Overlay Door	37 1/2″

Product Features

Interior Cabinet Finish	Black
Capacity	Up to 3 wine bottles or up to 75 12-oz cans
Shelving System	Cantilever
Shelf Fronts	Black Steel-Framed
Other Storage	NA
Interior Lighting	White LED
Toe Grill Finish	Black
Hinge	Classic Hinge
Handle	Slim Designer Handle (Panel Overlay Does Not Include Handle)
Control Type	Intuit™
Temperature Range	34° to 42° F
Lock	No
Electrical Requirements	120V / 60Hz / 15A
Length of Power Cord	6′
Shipping Weight	125 lbs
Finishes	Stainless Steel, Overlay, Black
Vacation Mode	Yes
Agency Approvals	CSA, ENERGY STAR

For comprehensive installation instructions, please visit www.marvelrefrigeration.com to access the owner's guide.

Panel Overlay Dimensions (Solid Door)

For comprehensive installation instructions, please visit www.marvelrefrigeration.com to access the owner's guide.

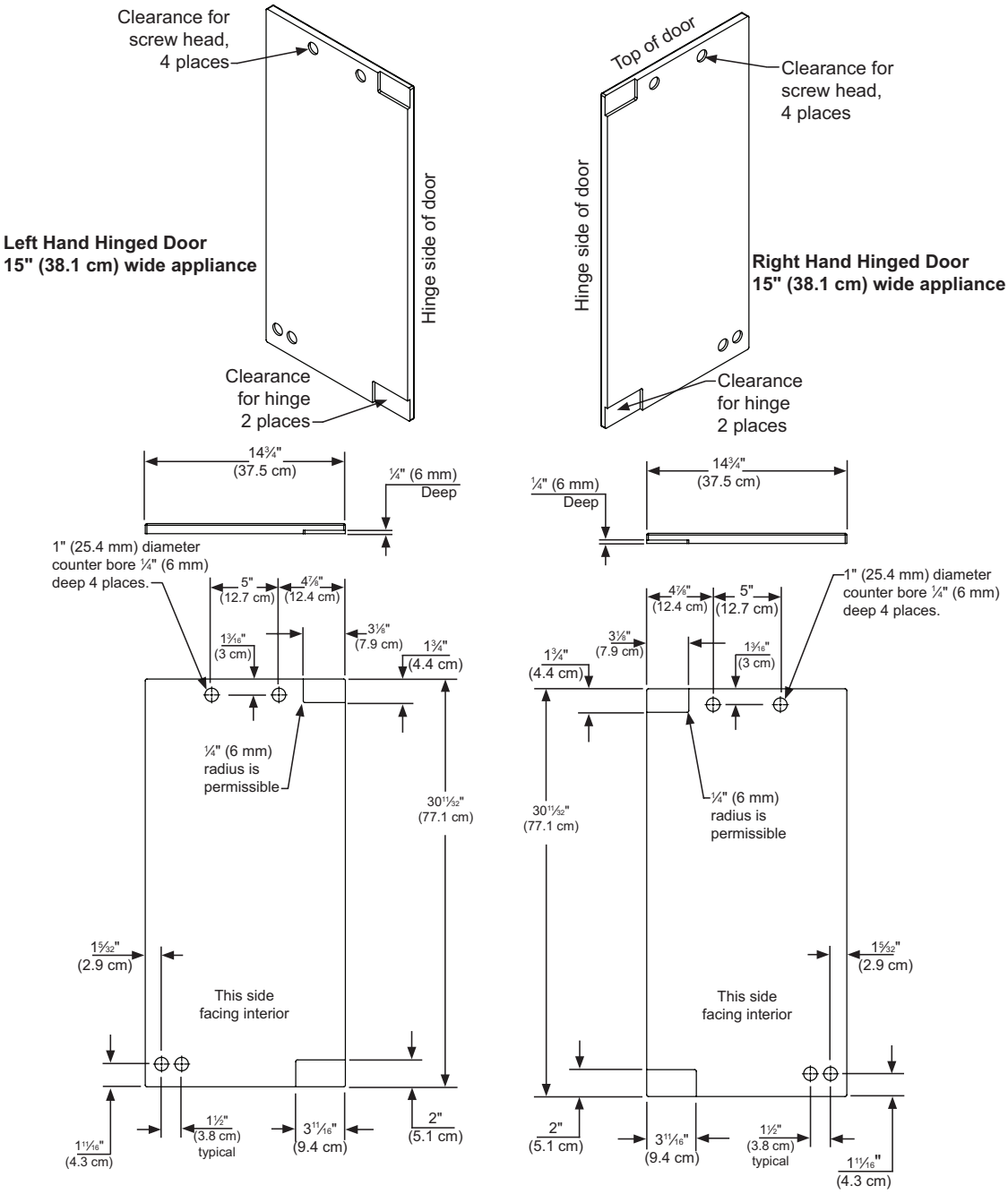

Left Hand Hinged Door
15" (38.1 cm) wide appliance

Right Hand Hinged Door
15" (38.1 cm) wide appliance