SUMMIT
PROFESSIONAL

BUILT-IN CERAMIC GAS COOKTOPS

Models GC2BGL
GC424BGL

Instruction Manual

Dear Customer,

Thank you for buying one of our ceramic gas cooktops. We are sure that this modern, functional and practical appliance, made using the finest quality materials, will fully satisfy your requirements.

This new appliance is very easy to use, but in order to obtain the best results, we strongly recommend that you read this booklet carefully before use. The manufacturer cannot be considered responsible for any damages to people or things in the event of incorrect installation or improper use of this appliance.

We reserve the right to make any changes to our products which we consider to be necessary or useful, also in the interest of the user, without affecting the essential characteristics in terms of functionality and safety.

The staff of
Felix Storch, Inc.
Summit Appliance Division
770 Garrison Avenue
Bronx, New York 10474
www.summitappliance.com

TABLE OF CONTENTS

Important Safeguards ***2***

Location of Parts ***3***

Installation ..... ***4 - 7***

Installing the Cooktop *4*

Sealing the Cooktop *5*

Room Ventilation *5*

Gas Connection *6*

Electrical Connection ..... *6 - 7*

Adjustments ***8***

Conversions ***9***

Using the Cooktop ..... ***10 - 11***

Lighting the Burners *10*

Proper Use of the Burners ..... *10 - 11*

Cleaning ..... ***12 - 13***

Servicing ***14***

Replacing Components

Limited Warranty ***15***

IMPORTANT SAFEGUARDS

- This product must be installed in conformity with local codes or, in absence of local codes, with the *National Fuel Gas Code, ASNI Z223.1/NFPA 54*.
- The product must be electrically grounded in accordance with local codes or, in the absence of local codes, with the *National Electrical Code, ANSI/NFPA 70*.
- The appliance and its individual shutoff valve must be disconnected from the gas supply piping system during any pressure testing of that system at test pressure in excess of 1/2 psi (3.5 kPa). The maximum gas supply pressure is 7 inch WC (water column) for natural gas and 11 inch WC for LP. The gas pressure regulator provided is regulated to 1 inch WC above the manufacturer's specified manifold pressure.
- Always disconnect the electrical supply before servicing the appliance.

> *WARNING*: *If the information in this manual is not followed exactly, a fire or explosion could result causing property damage, physical injury or death.*

- Do not store or use gasoline or other flammable vapors and liquids in the vicinity of this or any other appliance.
- What to do if you smell gas:
  - Do not try to turn on any appliance.
  - Do not touch any electrical switch. Do not use any phone in your building.
  - Immediately call your gas supplier from a neighbor's phone. Follow the gas supplier's instructions.
  - If you cannot reach your gas supplier, call the fire department.
- Installation and service must be performed by a qualified installer, service agency or the gas supplier.
- Save any nozzles removed from the appliance for future use.
- The maximum depth of cabinets installed above the cooktop should be 13 inches (330 mm).
- Keep the appliance clear and free from combustible materials, gasoline and other flammable vapors and liquids.
- Do not obstruct the flow of gas or block any air vents.

LOCATION OF PARTS

MODEL: GC2BGL	MODEL: GC424BGL
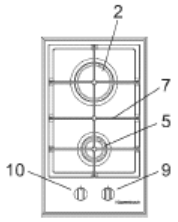	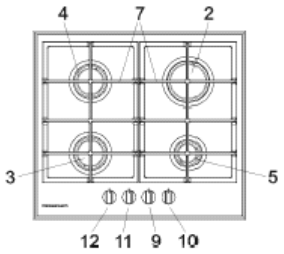

Part No.	Description	Heat supplied
2	Fast burner	8350 Btu/h
3	Semi-fast burner, front	4350 Btu/h
4	Semi-fast burner, back	4350 Btu/h
5	Auxiliary burner	3400 Btu/h
7	Grate	
9	Burner no. 2 control knob	
10	Burner no. 5 control knob	
11	Burner no. 4 control knob	
12	Burner no. 3 control knob	

NOTICE: This appliance has been manufactured for residential use only.

INSTALLATION

Installation, adjustment of controls and maintenance must only be carried out by qualified personnel.

Incorrect installation may cause damage to persons, animals or property for which the Manufacturer will not be considered responsible. During the life of the system, the automatic safety or regulating devices on the appliance may only be modified by the manufacturer or by his duly authorized dealer.

Installing the Cooktop

Check that the appliance is in good condition after having removed the outer packaging and internal wrappings from around the various loose parts. In case of doubt, do not use the appliance and contact qualified personnel.

Never leave packaging materials (cardboard, bags, Styrofoam, nails, etc.) within the reach of children since these items could become sources of danger.

The measurements of the opening made in the top of the modular cabinet and into which the cooktop will be installed are indicated in Fig. 1 and the following chart. Always comply with the measurements given for the hole into which the appliance will be recessed (see Figs. 1 and 2).

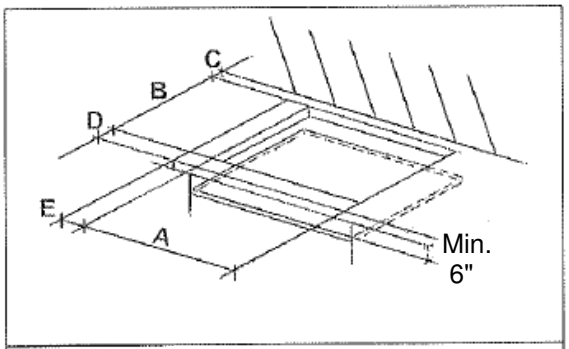

Fig. 1

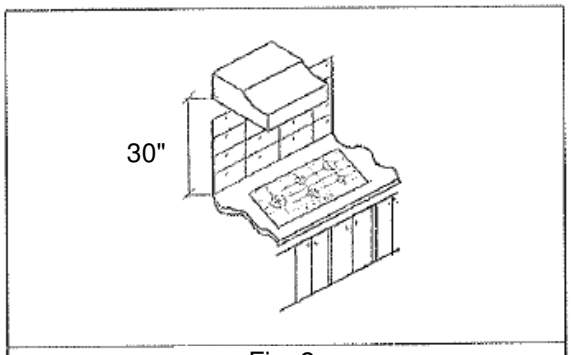

Fig. 2

Use These Dimensions (in inches)					
Model No.	**A**	**B**	**C**	**D**	**E**
GC2BGL	11¼	19⅛	2¼	2¼	2⅞
GC424BGL	21¾	18⅝	2½	2½	2⅞

Sealing the Cooktop

The cooktop has a special seal that prevents liquid from getting into the cabinet below. Follow these instructions exactly in order to apply this seal correctly:

Detach the seals from their backing, checking that the transparent protection still adheres to the seal itself.

Turn the cooktop over and correctly position seal "E" (Fig. 3) under the edge of the cooktop itself so that the outer side of the seal perfectly matches the outer edge of the cooktop. The ends of the strips must fit together without overlapping.

Once the seals are securely and evenly fixed to the cooktop, press them into place with the fingers and remove the strip of protective paper from the seal. Set the plate into the hole made in the cabinet.

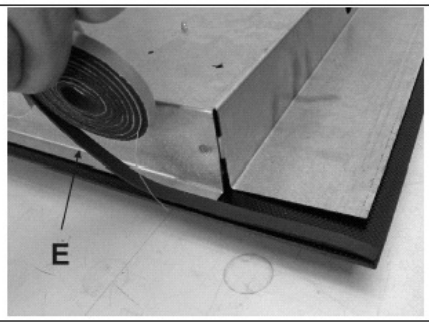

Fig. 3

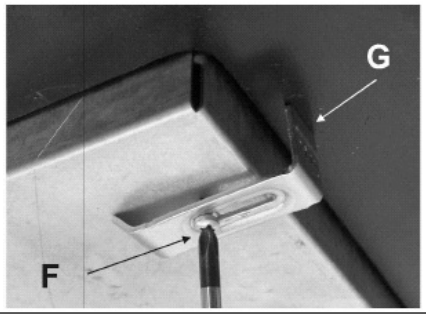

Fig. 4

Attach brackets "G" to the bottom of the cooktop with screws "F" until each bracket contacts the underside of the cabinet (Fig. 4). In fastening the brackets, do not use a mechanical or electric screwdriver. Instead, use a hand-operated screwdriver and exert only moderate force.

The adjacent walls (left, right or behind) that exceed the cooktop in height must be at a minimum distance from the cut hole as indicated in Fig. 1 and the chart on the preceding page.

In order to avoid accidentally touching the hot cooktop bottom, it is necessary to put a horizontal wooden insert, attached by screws, at a minimum distance of 6" below the lower surface of the cooktop (see Fig. 1).

Room Ventilation

To ensure proper operation of the appliance, be sure that the room where it is installed has adequate ventilation.

Gas Connection

Natural Gas and Propane Gas

Natural gas installations require the connection of a gas regulator to the cooktop. You will find this regulator among the accessories supplied with the appliance.

Assemble the regulator (noting the direction of gas flow) and transition pieces (supplied) in accordance with the figure below.

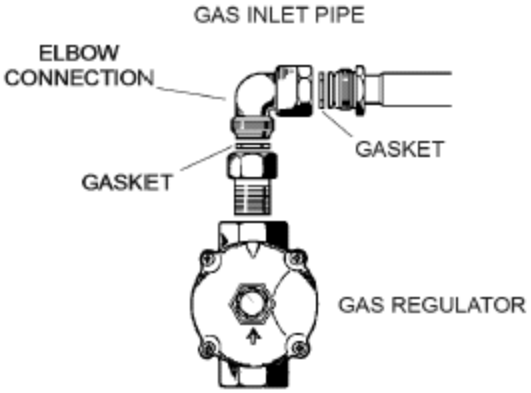

The transition piece on the supply side of the regulator must be provided by the installer. Unions compatible with the hose fittings must be used and connections tested for gas leaks.

Be sure that the supply connection point is accessible with the appliance installed.

WARNING: Be sure the hose assembly is restrained from accidental contact with the flue or flue outlet of an under-counter oven.

Electrical Connection

The electrical connections of the appliance must be carried out in compliance with local standards and provisions.

Before connecting the appliance, check that:

1. The electrical capacity of the main electrical supply and current sockets suit the maximum power rating of the appliance. (See the data label attached to the bottom of the cooktop.)
2. The socket or system has an efficient ground connection in compliance with local standards and provisions. The manufacturer is not responsible for failure to comply with these provisions.

When the appliance is connected to electrical power by a socket:

- Fit a standard plug suited to the load indicated on the data label to the cable.
- Fit the wires following Fig. 5, noting the following correspondences:
  Letter L (live) = wire
  Letter N (neutral) = wire

  Ground symbol ⏚ = green or yellow-green wire
- Never use adapters or shunts for connection since these could create false contacts and lead to dangerous overheating.
- The outlet must be accessible after the cooktop is built in.

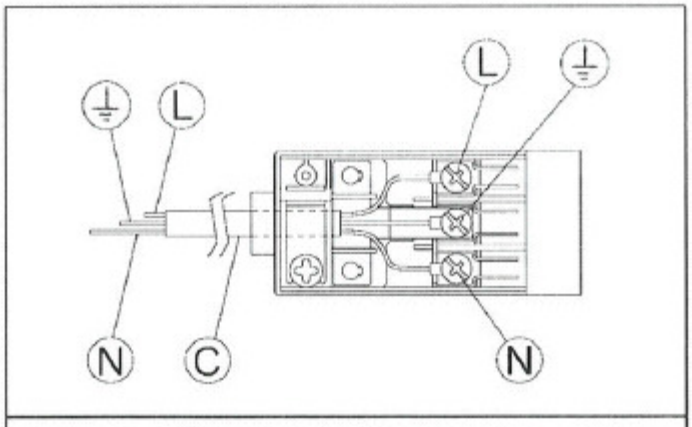

Fig. 5

When the appliance is connected directly to the electrical main:

- Install an omnipolar circuit-breaker between the appliance and the electrical main. This circuit-breaker should be sized in compliance with local installation regulations.
- Remember that the ground wire must not be interrupted by the circuit-breaker.
- For optimum safety, the electrical connection may also be protected by a high-sensitivity differential circuit-breaker.

You are strongly advised to fix the yellow-green ground wire to an efficient grounding system

ADJUSTMENTS

Always disconnect the appliance from the electrical power source before making any adjustments. All seals must be replaced by the technician when any adjustments are completed.

Taps

"Reduced rate" adjustment:

1. Switch on the burner and turn the corresponding knob to the "Reduced rate" position (small flame icon, Fig. 8, page 10).
2. Remove knob "M" (Fig. 6), which is simply pressed onto its support rod.
3. Insert a small screwdriver "D" into hole "C" (Fig. 6) and turn the throttle screw to the right or left until the burner flame has been adequately regulated to the "Reduced rate" position.

Check that the flame does not go out when the knob is sharply switched from the "Full on" to the "Reduced rate" position.

It is understood that only burners operating with Natural Gas or City Gas should be subjected to the above-mentioned adjustments. The screw must be fully locked when the burners operate with Propane (turn clockwise).

The operations described above can be carried out easily, whatever the position of the cooktop or however it is fastened to the work surface.

THE BURNERS DO NOT REQUIRE ANY REGULATION OF INCOMING AIR.

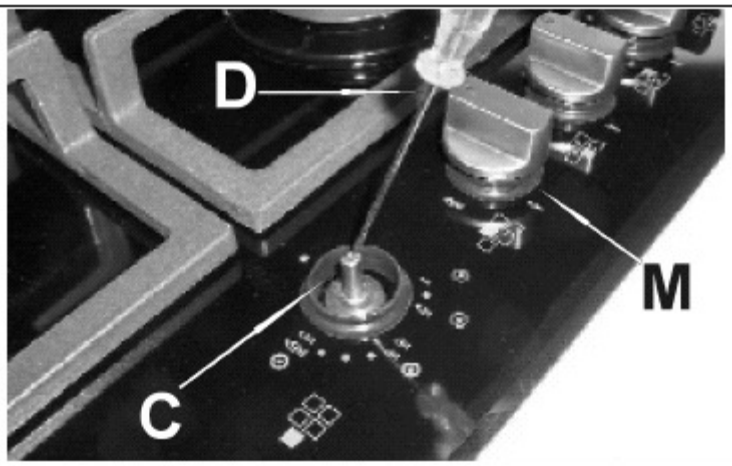

Fig. 6

CONVERSIONS

Replacing Nozzles

The burners can be adapted to suit different types of gas by fitting the nozzles that correspond to the gas used. To do this, it is necessary to remove the burner heads and use a straight key "B", to unscrew the nozzle "A" (see Fig. 7) and replace it with a nozzle corresponding to the gas used.

Be sure the nozzle is seated tightly.

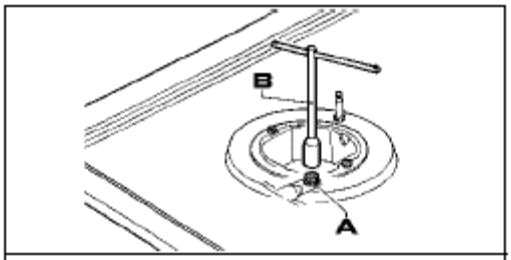

Fig. 7

After making these replacements, the technician must regulate the burners as described in *Adjustments* on the previous page and apply the label corresponding to the new gas type in place of that previously applied. This label is contained in the spare nozzle bag.

For ease of the fitter, we have prepared a table indicating the flow capacities, the heat capacities of the burners, the diameter of the nozzles and the working pressure for the various types of gas.

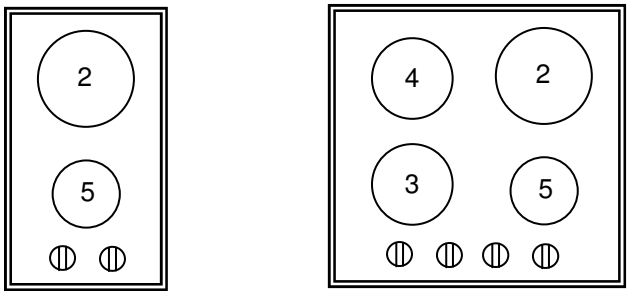

Arrangement of Burners

Burners		Gas	Normal Pressure, inches water column	Injector Diameter, 1/100 mm	Nominal Heat Input (Btu/h)	
No.	Description				Min.	Max.
2	Rapid	Propane HD-5 Natural Gas	11 7	83 145	2400 2400	8350 8350
3	Semirapid	Propane HD-5 Natural Gas	11 7	58 100	2050 1700	4350 4350
4	Semirapid	Propane HD-5 Natural Gas	11 7	58 100	2050 1700	4350 4350
5	Auxiliary	Propane HD-5 Natural Gas	11 7	50 90	1200 1400	3400 3400

USING THE COOKTOP

Lighting the burners

A diagram is screened beside each knob on the control panel of your cooktop. This diagram indicates to which burner the knob in question corresponds. After having opened the gas main or bottled gas tap, light the burners as described below:

The knobs of the burners are equipped with a safety cut-off device. They must be turned in a counter-clockwise direction until they reach the full-on position (large flame icon, Fig. 8) and come to a stop. Now push down on the knob. The burner should ignite in 2 or 3 seconds. Keep the knob depressed as you turn it toward the reduced rate position (small flame icon, Fig. 8) to adjust the flame. Should the flame accidentally go out, turn the burner control knob off and wait at least 1 minute before attempting to light it again.

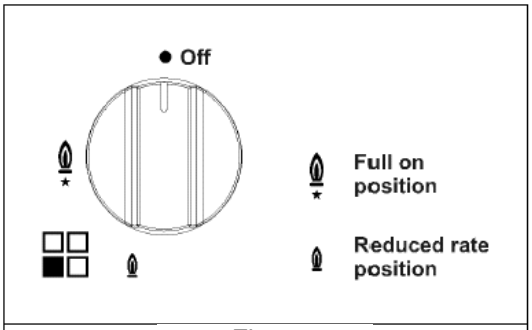

Fig. 8

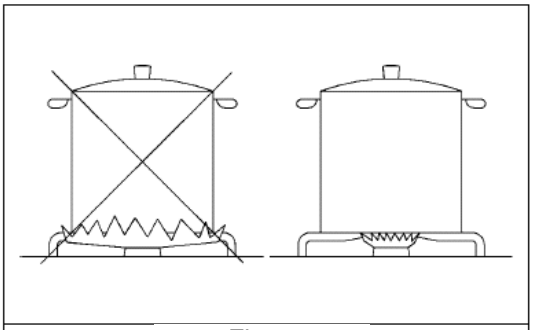

Fig. 9

Proper use of the burners

To achieve maximum efficiency with the least possible gas consumption, keep the following instructions in mind:

- Use the correct pan size for each burner. (See the following table and Fig. 9.)
- When the pan comes to a boil, set the knob to a reduced rate position (small flame icon, Fig. 8).
- Always put lids on the pans.
- Use only flat-bottomed pans.

Burners	Power Ratings	Pan Diameter
Fast burner	8350 Btu/h	8" to 8¾"
Semi-fast burner, front	4350 Btu/h	6¼" to 7"
Semi-fast burner, back	4350 Btu/h	6¼" to 7"
Auxiliary	3400 Btu/h	4" to 5½"

WARNINGS:

- Burners will only ignite when the corresponding knob has been set to the Full-on position (large flame icon, Fig. 8).
- Matches can be used to ignite the burners during a power outage, but use caution.
- Never leave the appliance unattended when the burners are being used. Make sure there are no children in the vicinity. In particular, make sure that the pan handles are correctly positioned. Keep checking on foods that require oil or other grease to cook since these products can easily catch on fire.
- The machine must not be used by people (including children) with impaired mental or physical capacities, or without experience of using electrical devices, unless supervised or instructed by an adult responsible for their safety and care. Children should not be allowed to play with the equipment.
- Never use aerosol sprays near the appliance when it is operating.
- Containers wider than the unit are not recommended.

NOTES:

- The use of a gas cooking appliance produces heat and moisture in the room in which it is installed. The room must therefore be well ventilated.
- Intensive and lengthy use of the appliance may require additional ventilation. This can be achieved by opening a window or by increasing the power of the mechanical exhaust system if installed.

WARNING!

NEVER use this appliance as a space heater to heat or warm the room. Doing so may result in carbon monoxide poisoning and overheating of the appliance.

CLEANING

CAUTION: Before cleaning the appliance, disconnect it from the gas and electricity supplies.

If you wish to maintain the shine of the ceramic surface, treat the glass with a silicon-based film product before use to protect the surface against water and dirt. This protective film is not durable, so it is advised to repeat the application of the product frequently.

It is very important to clean the cooktop every time you use it, while it is still warm.

Do not clean using abrasive metal scourers, powder abrasives or corrosive sprays.

Depending on the degree of dirt, we recommend the following:

- For light stains, a damp sponge is sufficient.
- Tough, encrusted dirt is easily eliminated using a scraper (Fig. 10), not supplied with the cooktop, but easy to find in local stores. ***Use the scraper carefully to avoid damaging the cooktop.***
- Traces of liquid spilled from pans can be eliminated with vinegar or lemon juice.
- ***Try not to allow sugar or sugary foods to fall on the cooktop while cooking. Should this occur, switch off the cooktop and clean it immediately with hot water, using a scraper on hot spills.***
- As time goes by, metallic streaks, discoloring or scratches may appear due to poor cleaning and the incorrect movement of pans. Scratches are hard to eliminate but do not affect the correct operation of your cooktop.
- Do not use jets of steam to clean the appliance.

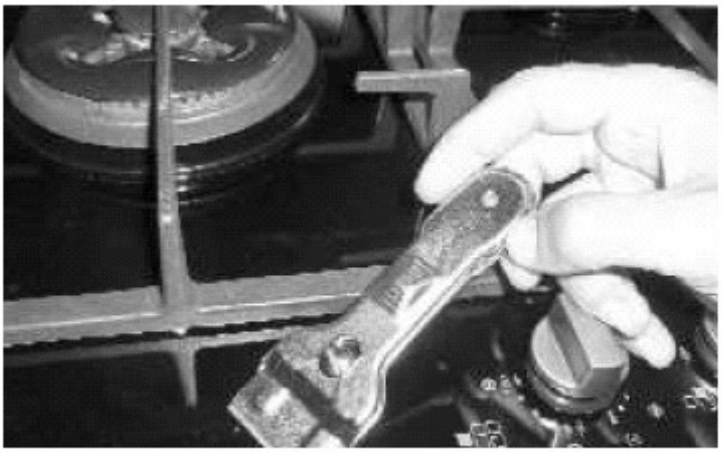

Fig. 10

The enamaled grids, enameled covers "A", "B" and "C", and burner heads "M" (see Figs. 11 and 11a) must also be washed and the ignition elements "AC" and safety cut-off sensors "TC" (see Fig. 11b) must be cleaned. Do not wash them in the dishwasher.

Cleaning operations must be carried out when the cooktop and components are not hot. The use of metal scouring pads, powder abrasives and corrosive sprays must be avoided.

Do not allow vinegar, coffee, milk, salt water, lemon juice or tomato juice to remain in prolonged contact with the surfaces.

WARNINGS: When reassembling the components, observe the following recommendations:

- Check that the holes in the burner heads "M" (Fig. 11) are not blocked by foreign bodies.
- Ensure that the enameled covers "A", "B" and "C" (Figs. 11 and 11a) are correctly positioned on the burner head. The covers are correctly positioned on the head when they are perfectly stable.
- If the opening and closing of any valve is awkward, do not force it but request urgent intervention by the technical assistance service.
- Do not use jets of steam to clean the appliance.
- To prevent difficulties with lighting, regularly clean the ignition elements (ceramic and electrode) and safety cut-off switches.

IMPORTANT:
When removing the burners to clean them, ensure that all parts are correctly positioned before relighting them. Do not remove the metal disc "B" (Fig. 11a) screwed onto the burner.

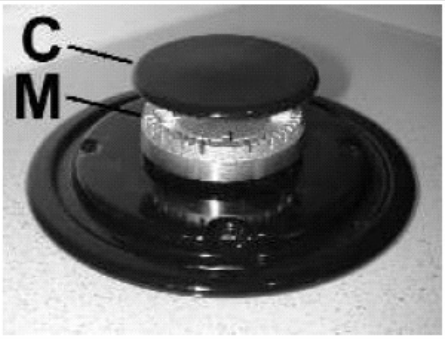

Fig. 11

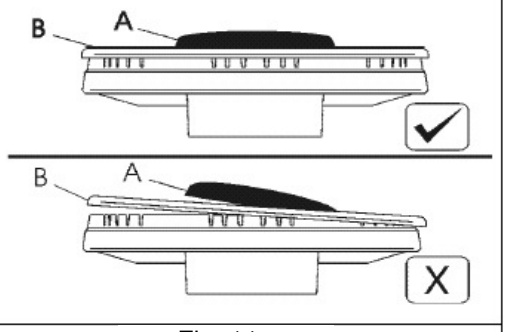

Fig. 11a

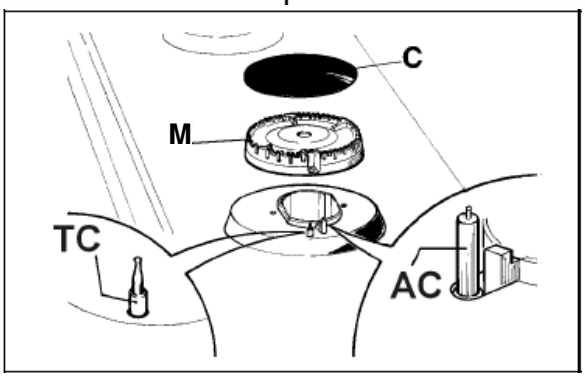

Fig. 11b

SERVICING

Always disconnect the appliance from the electric and gas mains before proceeding with any servicing operation.

Replacing Components

To replace the components housed inside the appliance, remove the trivets and the burners from the upper part of the cooktop. Remove the fixing screws "V" of the burner (Fig. 12) and the knobs by pressure from the hands, in order to take off the appliance.

After having carried out these operations, the burners (Fig. 13), taps (Fig. 14) and electrical components can all be replaced (Fig. 15).

It is advisable to change seal "D" (Fig. 14) whenever a tap is replaced to ensure a perfect tightness.

Greasing the taps (See Fig. 16)

If a tap becomes stiff to operate, it must be immediately greased in compliance with the following instructions:

1. Remove the tap.
2. Clean the cone and its housing using a cloth soaked in solvent.
3. Lightly grease the cone.
4. Fit the cone back into place, operate it a few times and then remove it again. Eliminate any excess grease and check that the gas ducts have not become clogged.
5. Fit all parts back into place, complying with the disassembling order in reverse.
6. The tight closure test must be done using a foaming liquid. ***Never use a flame for this test.***

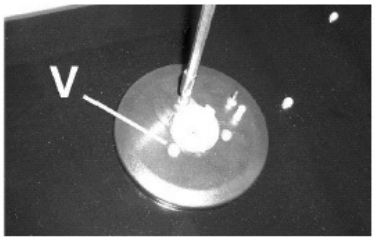

Fig. 12

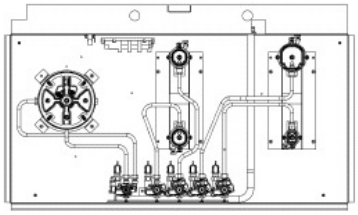

Fig. 13

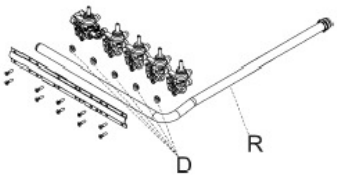

Fig. 14

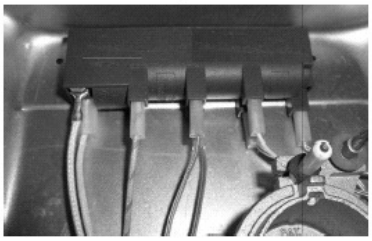

Fig. 15

Fig. 16

LIMITED WARRANTY

Within the 48 contiguous United States, for one year from the date of purchase, when this appliance is operated and maintained according to instructions attached to or furnished with the product, warrantor will pay for factory-specified parts and repair labor to correct defects in materials or workmanship. Service must be provided by a designated service company. Outside the 48 states, all parts are warranted for one year from manufacturing defects. Plastic parts, shelves and cabinets are warranted to be manufactured to commercially acceptable standards, and are not covered from damage during handling or breakage.

ITEMS WARRANTOR WILL NOT PAY FOR:

- Service calls to correct the installation of your appliance, to instruct you how to use your appliance, to replace or repair fuses or to correct wiring or plumbing.
- Service calls to repair or replace appliance light bulbs or broken glass shelves. Consumable parts (such as filters) are excluded from warranty coverage.
- Damage resulting from accident, alteration, misuse, abuse, fire, flood, acts of God, improper installation, installation not in accordance with electrical or plumbing codes, or use of products not approved by warrantor.
- Replacement parts or repair labor costs for units operated outside the United States.
- Repairs to parts or systems resulting from unauthorized modifications made to the appliance.
- Expenses for travel and transportation for product service in remote locations.
- The removal and reinstallation of your appliance if it is installed in an inaccessible location or is not installed in accordance with published installation instructions.

DISCLAIMER OF IMPLIED WARRANTIES; LIMITATION OF REMEDIES

CUSTOMER'S SOLE AND EXCLUSIVE REMEDY UNDER THIS LIMITED WARRANTY SHALL BE PRODUCT REPAIR AS PROVIDED HEREIN. IMPLIED WARRANTIES, INCLUDING WARRANTIES OF MERCHANTABILITY OR FITNESS FOR A PARTICULAR PURPOSE, ARE LIMITED TO ONE YEAR. WARRANTOR SHALL NOT BE LIABLE FOR INCIDENTAL OR CONSEQUENTIAL DAMAGES. SOME STATES DO NOT ALLOW THE EXCLUSION OR LIMITATION OF INCIDENTAL OR CONSEQUENTIAL DAMAGES, OR LIMITATIONS ON THE DURATION OF IMPLIED WARRANTIES OF MERCHANTABILITY OR FITNESS, SO THESE EXCLUSIONS OR LIMITATIONS MAY NOT APPLY TO YOU. THIS WARRANTY GIVES YOU SPECIFIC LEGAL RIGHTS AND YOU MAY ALSO HAVE OTHER RIGHTS, WHICH VARY FROM STATE TO STATE.

Call customer service toll free in the U.S.A. @ 1-800-932-4267, Monday to Friday 9:00 am. - 5:00 p.m. (ET).

Order parts online at www.summitappliance.com/support

SUMMIT PROFESSIONAL

Felix Storch, Inc.
Summit Appliance Division
770 Garrison Avenue
Bronx, NY 10474

Phone: (718) 893-3900
Fax: (718)842-3093
Web Site:
www.summitappliance.com