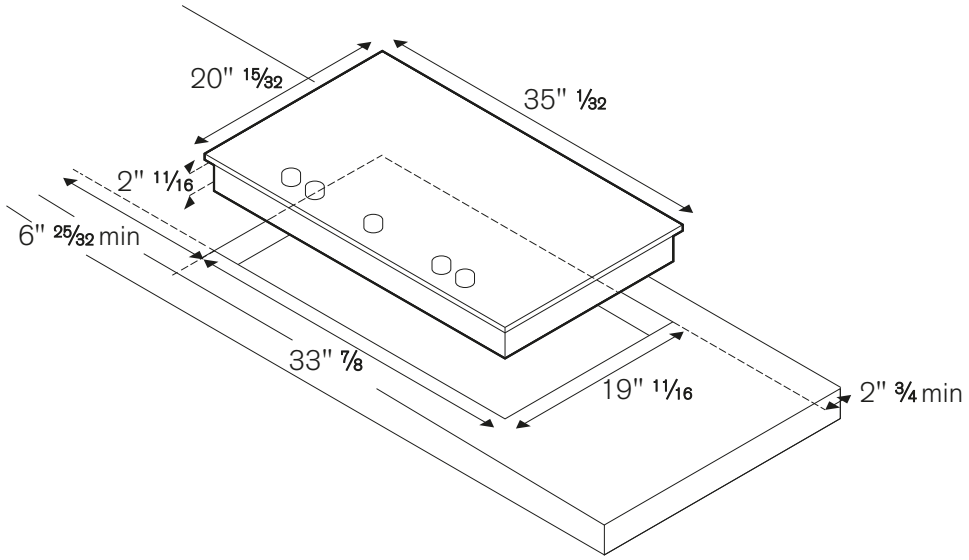
20" 15/32
35" 1/32
2" 11/16
6" 25/32 min
33" 7/8
19" 11/16
2" 3/4 min