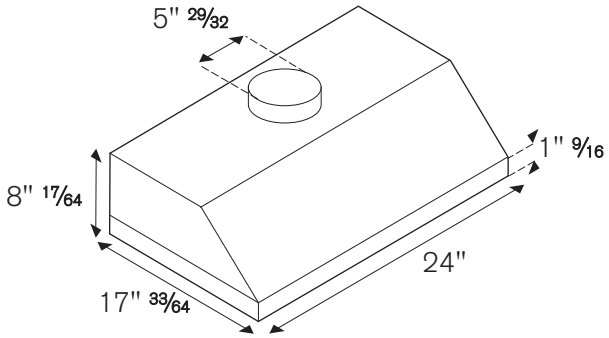
5" 29/32
1" 9/16
8" 17/64
24"
17" 33/64

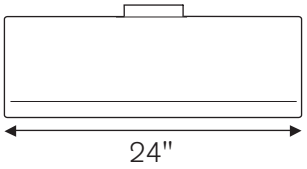
24"

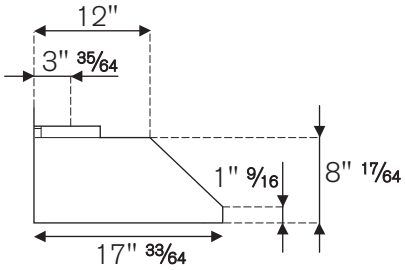
12"
3" 35/64
1" 9/16
8" 17/64
17" 33/64