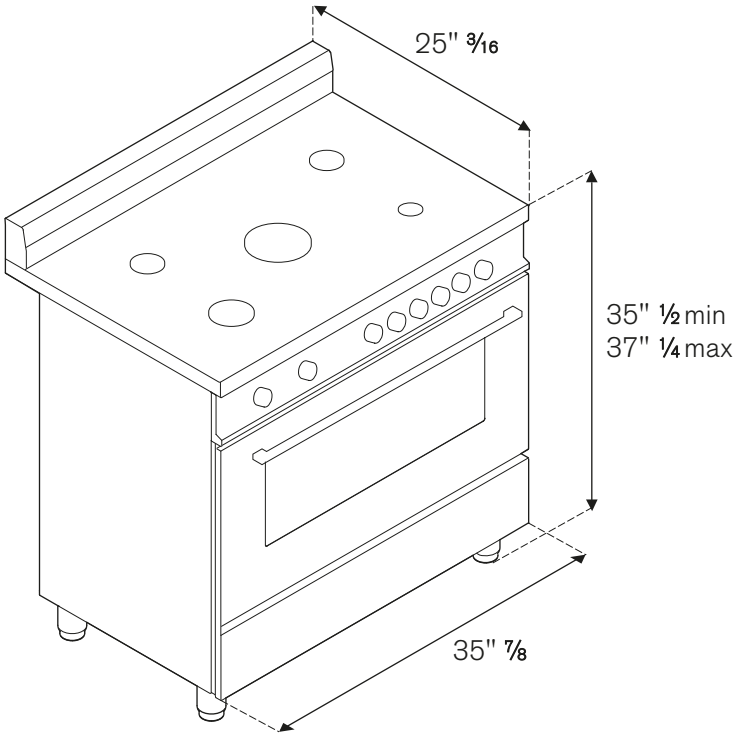
25" 3/16
35" 1/2 min
37" 1/4 max
35" 7/8

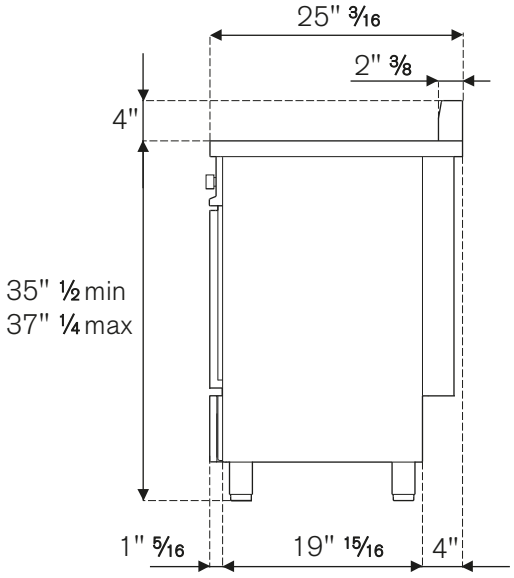
25" 3/16
2" 3/8
4"
35" 1/2 min
37" 1/4 max
1" 5/16
19" 15/16
4"

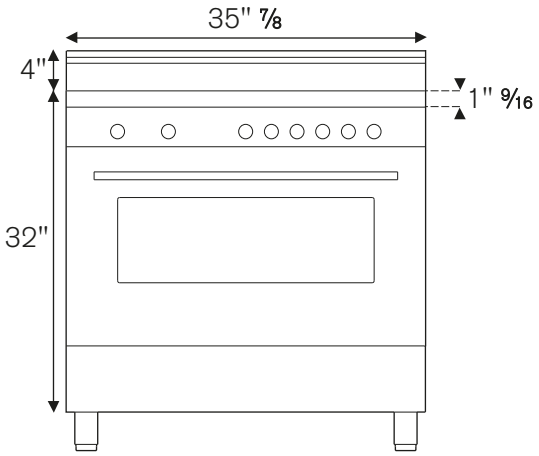
35" 7/8
4"
1" 9/16
32"

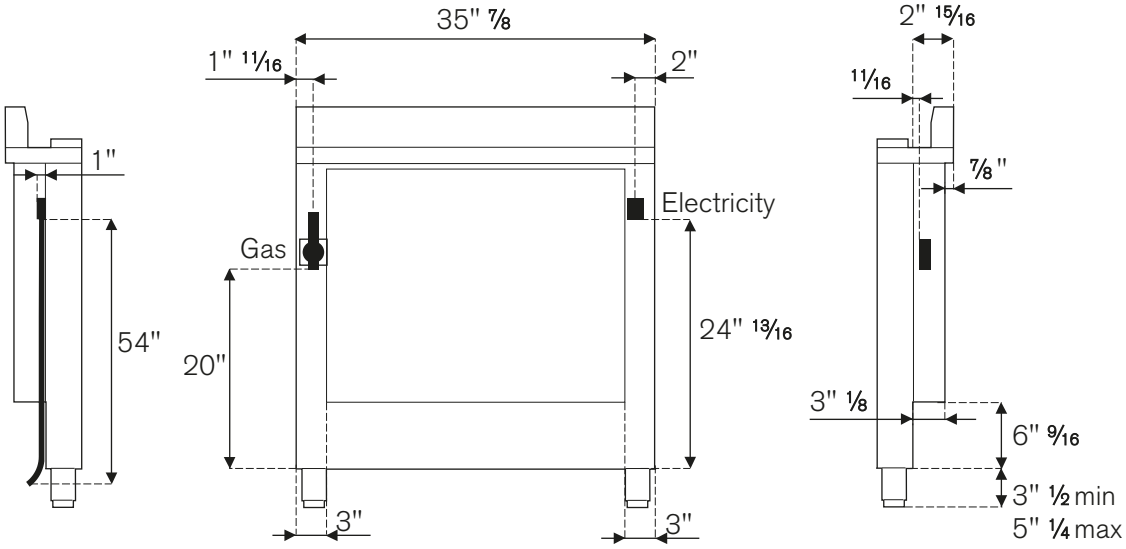
1"
54"
35" 7/8
1" 11/16
2"
Gas
Electricity
20"
24" 13/16
3"
3"
2" 15/16
11/16
7/8"
3" 1/8
6" 9/16
3" 1/2 min
5" 1/4 max