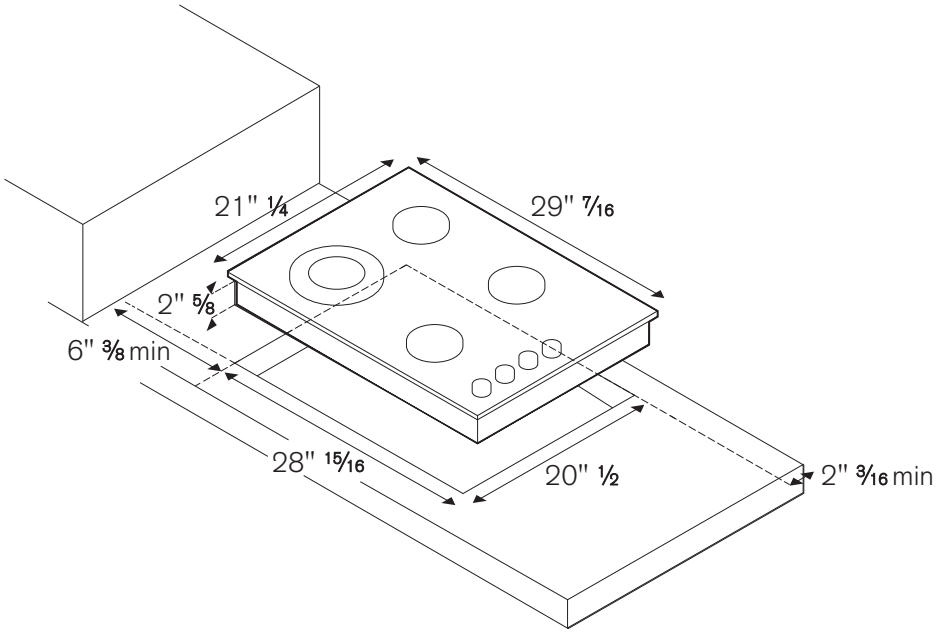
21" 1/4
29" 7/16
2" 5/8
6" 3/8 min
28" 15/16
20" 1/2
2" 3/16 min

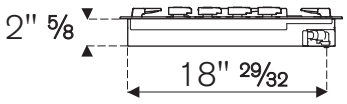
2" 5/8
18" 29/32

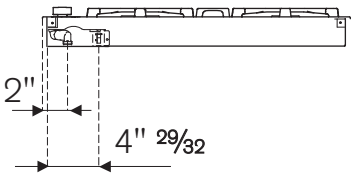
2"
4" 29/32