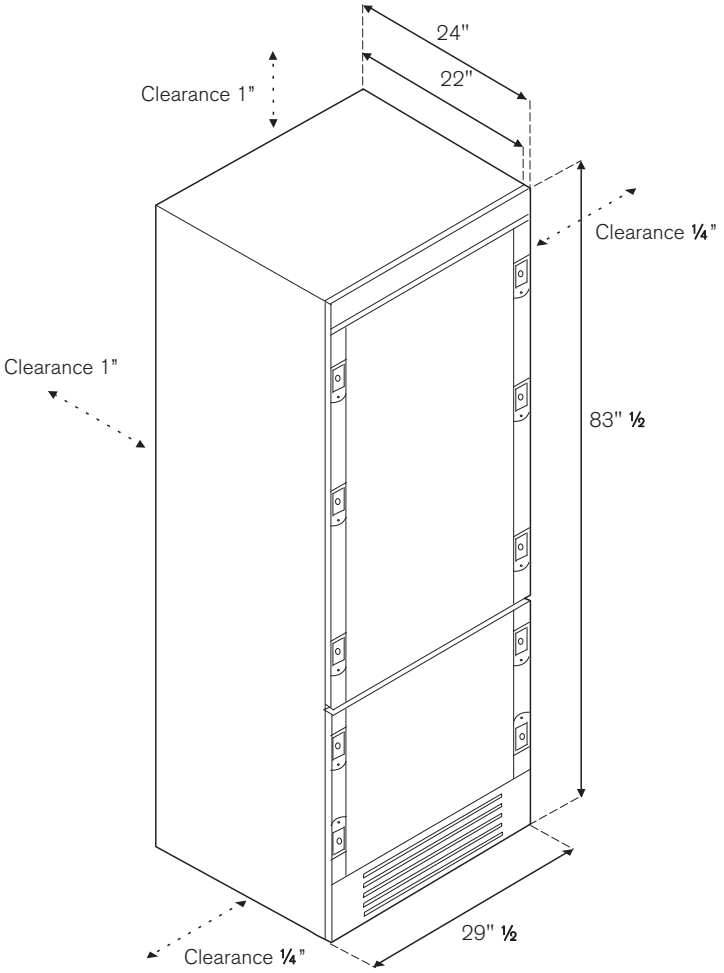
24"
22"
Clearance 1"
Clearance ¼"
Clearance 1"
83" ½
29" ½
Clearance ¼"

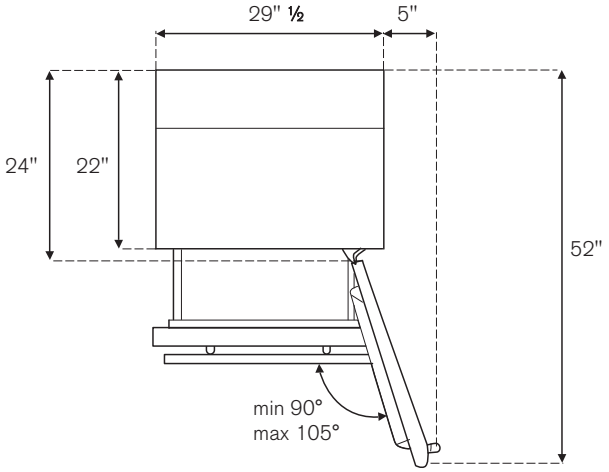
29" ½
5"
24"
22"
52"
min 90°
max 105°

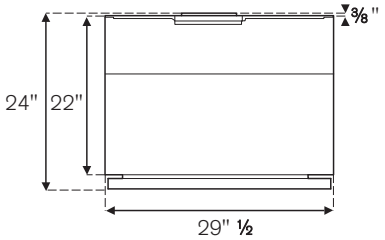
⅜"
24"
22"
29" ½