USER GUIDE & SERVICE MANUAL

SAFETY • INSTALLATION & INTEGRATION • OPERATING INSTRUCTIONS • MAINTENANCE • SERVICE

1000 Series • 1224BEV • 24" Beverage Center

Tip: Click on any section below to jump directly there

Contents

Intro

Safety
- Safety and Warning
- Disposal and Recycling

Installation
- Environmental Requirements
- Electrical
- Cutout Dimensions
- Product Dimensions
- Side by Side Installation
- Anti-Tip Bracket
- General Installation
- Integrated Panel Dimensions
- Integrated Panel Installation
- Grille / Plinth Installation
- Door Swing
- Door Stop
- Door Adjust
- Wood Trim Finishing
- Free Standing Kit

Operating Instructions
- First Use
- Control Operation
- Sabbath Mode
- Airflow and Product Loading
- U-Line Wine Guide
- Recommended Wine Storage
- Interior Shelves

Maintenance
- Cleaning
- Cleaning Condenser
- Wine Rack Installation
- Extended Non-Use

Service
- Troubleshooting
- Warranty

Service Extended
- Wire Diagram
- Product Liability
- Warranty Claims
- Parts
- Ordering Replacement Parts
- System Diagnosis Guide
- Compressor Specifications
- Troubleshooting Extended
- Control Quick Guide
- Thermistor
- Defrost

WELCOME TO U-LINE

Congratulations on your U-Line purchase. Your product comes from a company with over five decades of premium modular ice making, refrigeration, and wine preservation experience. U-Line continues to be the American leader, delivering versatility and flexibility for multiple applications including residential, light commercial, outdoor and marine use. U-Line's complete product collection includes Wine Captain® Models, Beverage Centers, Clear Ice Machines, Crescent Ice Makers, Glass & Solid Door Refrigerators, Drawer Models, Freezers, Combo® Models, and more.

U-Line has captivated those with an appreciation for the finer things with exceptional functionality, style, inspired innovations and attention to even the smallest details. We are known and respected for our unwavering dedication to product design, quality and selection. U-Line is headquartered in Milwaukee, Wisconsin and has shipped product to five continents for over two decades and is proud to have the opportunity to ship to you.

PRODUCT INFORMATION

Looking for additional information on your product? User Guides, Spec Sheets, CAD Drawings, Compliance Documentation, and Product Warranty information are all available for reference and download at u-line.com.

PROPERTY DAMAGE / INJURY CONCERNS

In the unlikely event property damage or personal injury is suspected related to a U-Line product, please take the following steps:

1. U-Line Customer Care must be contacted immediately at +1.800.779.2547.
2. Service or repairs performed on the unit without prior written approval from U-Line is not permitted. If the unit has been altered or repaired in the field without prior written approval from U-Line, claims will not be eligible.

GENERAL INQUIRIES

U-Line Corporation
8900 N. 55th Street
Milwaukee, Wisconsin 53223 USA
Monday - Friday 8:00 am to 4:30 pm CST
T: +1.414.354.0300
F: +1.414.354.7905
Email: sales@u-line.com
u-line.com

SERVICE & PARTS ASSISTANCE

Monday - Friday 8:00 am to 4:30 pm CST
T: +1.800.779.2547
F: +1.414.354.5696
Service Email: onlineservice@u-line.com
Parts Email: onlineparts@u-line.com

CONNECT WITH US

Designed, engineered and assembled in WI, USA

Safety and Warning

NOTICE

Please read all instructions before installing, operating, or servicing the appliance.

Use this appliance for its intended purpose only and follow these general precautions with those listed throughout this guide:

SAFETY ALERT DEFINITIONS

Throughout this guide are safety items labeled with a Danger, Warning or Caution based on the risk type:

DANGER

Danger means that failure to follow this safety statement will result in severe personal injury or death.

WARNING

Warning means that failure to follow this safety statement could result in serious personal injury or death.

CAUTION

Caution means that failure to follow this safety statement may result in minor or moderate personal injury, property or equipment damage.

DANGER

This unit contains R600a (Isobutane) which is a flammable hydrocarbon. It is safe for regular use. Do not use sharp objects to expedite defrosting. Do not service without consulting the "R600a specifications" section included in the User Guide. Do not damage the refrigerant circuit.

WARNING

Service must be done by factory authorized service personnel. Any parts shall be replaced with like components. Failure to comply could increase the risk of possible ignition due to incorrect parts or improper service.

Disposal and Recycling

DANGER

RISK OF CHILD ENTRAPMENT. Before you throw away your old refrigerator or freezer, take off the doors and leave shelves in place so children may not easily climb inside.

If the unit is being removed from service for disposal, check and obey all federal, state and local regulations regarding the disposal and recycling of refrigeration appliances, and follow these steps completely:

1. Remove all consumable contents from the unit.

2. Unplug the electrical cord from its socket.

3. Remove the door(s)/drawer(s).

Environmental Requirements

This model is intended for indoor/interior applications only and is not to be used in installations that are open/exposed to natural elements.

This unit is designed to operate between 50°F (10°C) and 100°F (38°C). Higher ambient temperatures may reduce the unit's ability to reach low temperatures and/or reduce ice production on applicable models.

For best performance, keep the unit out of direct sunlight and away from heat generating equipment.

In climates where high humidity and dew points are present, condensation may appear on outside surfaces. This is considered normal. The condensation will evaporate when the humidity drops.

⚠ CAUTION

Damages caused by ambient temperatures of 40°F (4°C) or below are not covered by the warranty.

Electrical

WARNING

SHOCK HAZARD — Electrical Grounding Required. Never attempt to repair or perform maintenance on the unit until the electricity has been disconnected.

Never remove the round grounding prong from the plug and never use a two-prong grounding adapter.

Altering, cutting or removing power cord, removing power plug, or direct wiring can cause serious injury, fire, loss of property and/or life, and will void the warranty.

Never use an extension cord to connect power to the unit.

Always keep your working area dry.

NOTICE

Electrical installation must observe all state and local codes. This unit requires connection to a grounded (three-prong), polarized receptacle that has been placed by a qualified electrician.

The unit requires a grounded and polarized 115 VAC, 60 Hz, 15A power supply (normal household current). An individual, properly grounded branch circuit or circuit breaker is recommended. A GFCI (ground fault circuit interrupter) is usually not required for fixed location appliances and is not recommended for your unit because it could be prone to nuisance tripping. However, be sure to consult your local codes.

See CUTOUT DIMENSIONS for recommended receptacle location.

Cutout Dimensions

PREPARE SITE

Your U-Line product has been designed for either free-standing or built-in installation. When built-in, your unit does not require additional air space for top, sides, or rear. However, the front grille must NOT be obstructed, and clearance is required for an electrical connection in the rear.

⚠ CAUTION

Unit can NOT be installed behind a closed cabinet door.

CUTOUT DIMENSIONS

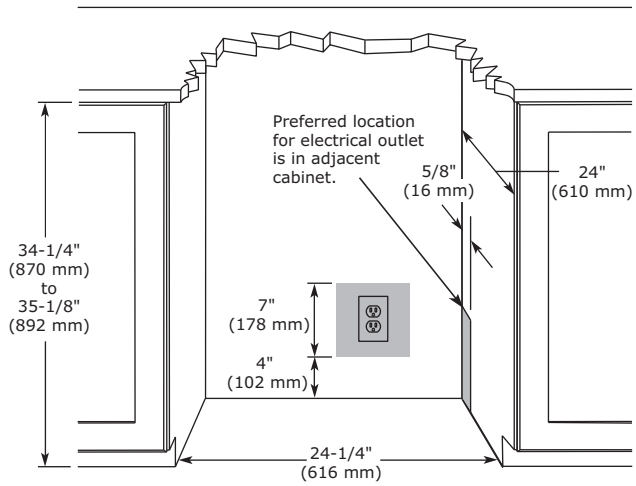

Product Dimensions

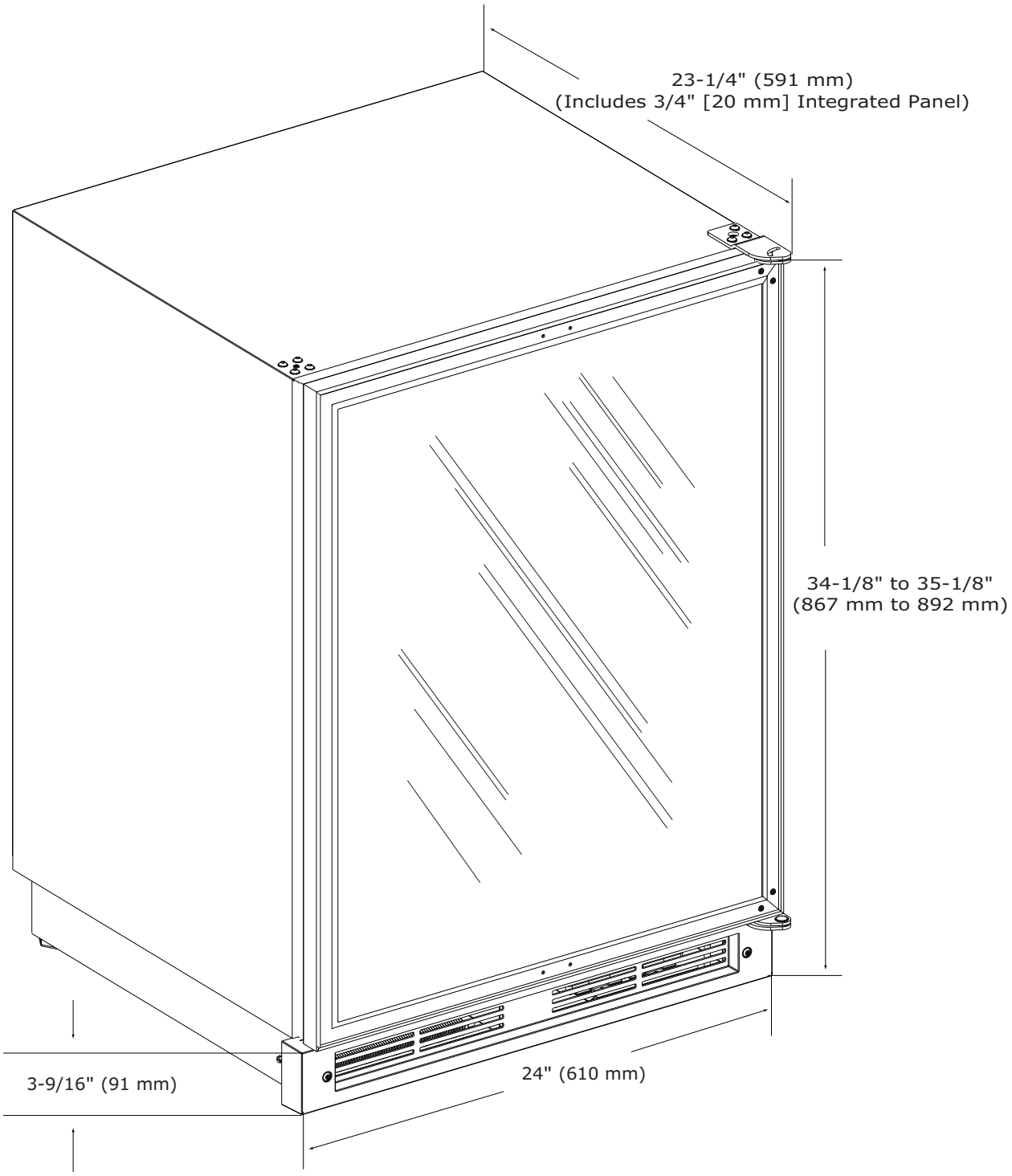

Side-by-Side Installation

Two units may be installed side-by-side.

Cutout width for a side-by-side installation is the cutout dimension of a single unit times two.

No trim kit is required. However, 1/4" (6 mm) of space needs to be maintained between the units to ensure unobstructed door swing.

Units must operate from separate, properly grounded electrical receptacles placed according to each unit's electrical specifications requirements.

Side-by-Side Installation with Bracket

1. Slide both units out so screws on top of units are easily accessible.

2. Remove screws as shown below.

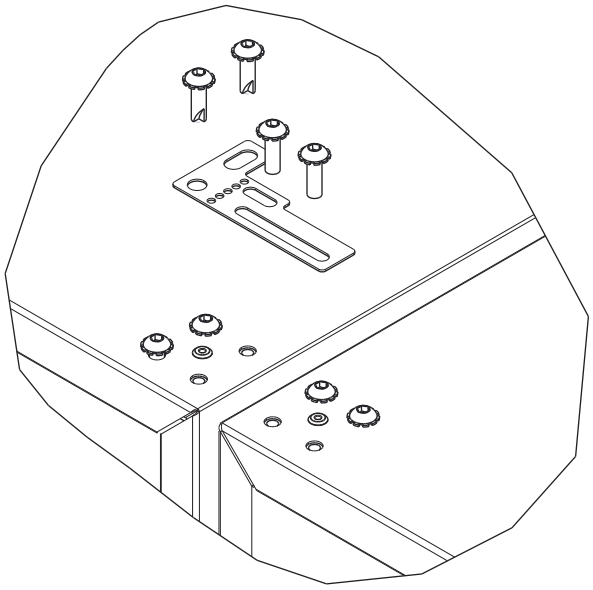

3. Place bracket over holes and attach to unit with two screws removed in step 2 using a T-25 Torx driver. Tighten screws fully.

4. Gently push units into position. Be careful not to entangle the electrical cord or water line, if applicable.

5. Re-check the leveling, from front to back and side to side. Make any necessary adjustments. The unit's top surface should be approximately 1/8" (3 mm) below the countertop.

Anti-Tip Bracket

1. Slide unit out so screws on top of unit are easily accessible.

2. Remove the two screws from the opposite side of the hinge assembly using a T-25 Torx driver (see below).

NOTE: 1224 models shown with four screw. 1215 models only have three screws, but same screws are used in both applications.

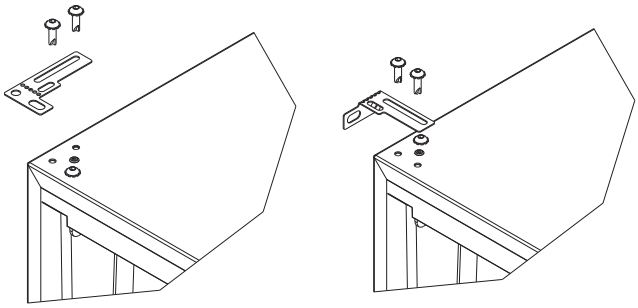

3. Place bracket (part #14154) over holes and attach to unit with two screws removed in step 2 using a T-25 Torx driver. Tighten screws fully.

4. Gently push unit into position. Be careful not to entangle the electrical cord or water line, if applicable.

5. Check to be sure the unit is level from front to back and side to side. Make any necessary adjustments. The unit's top surface should be approximately 1/8" (3 mm) below the countertop.

6. Secure bracket into adjoining surface.

General Installation

LEVELING INFORMATION

1. Use a level to confirm the unit is level. Level should be placed along top edge and side edge as shown.

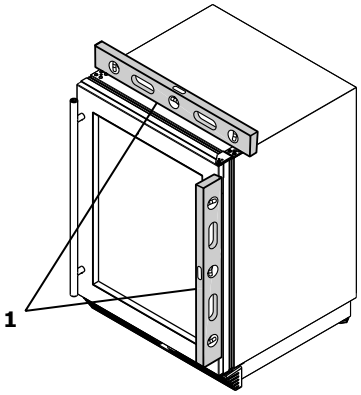

2. If the unit is not level, adjust the legs on the corners of the unit as necessary.

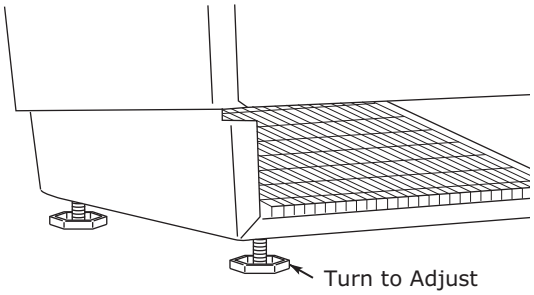

3. Confirm the unit is level after each adjustment and repeat the previous steps until the unit is level.

INSTALLATION TIP

If the room floor is higher than the floor in the cutout opening, adjust the rear legs to achieve a total unit rear height of 1/8" (3 mm) less than the opening's rear height. Shorten the unit height in the front by adjusting the front legs. This allows the unit to be gently tipped into the opening. Readjust the front legs to level the unit after it is correctly positioned in the opening.

INSTALLATION

1. Plug in the power/electrical cord.

2. Gently push the unit into position. Be careful not to entangle the cord.

3. Re-check the leveling, from front to back and side to side. Make any necessary adjustments. The unit's top surface should be approximately 1/8" (3 mm) below the countertop.

4. Remove the interior packing material and wipe out the inside of the unit with a clean, water-dampened cloth.

Integrated Panel Dimensions

INTEGRATED PANEL

NOTICE

Due to differences in surrounding cabinetry the panel may not perfectly align with door. The procedure below is designed to provide a finished integrated panel that seamlessly integrates with surrounding cabinetry.

The door panel must not weigh more than 20 lbs (10 kg).

It is important to ensure that all drilled holes are drilled to the correct depth in order to avoid splits in the wood when hardware is installed.

When applying an integrated panel to a unit, ensure that both sides are finished in order to prevent warping. In some panel installations, the panel may be visible through the glass while the door is open.

A full integrated door panel completely covers the door frame and provides a built-in appearance.

Integrated Panel Preparation

1. Cut the panels to the dimensions listed in the diagram below.
2. Optional: Stain or Finish panel to desired stain or color. Be sure to closely follow the instructions provided by the manufacturer.
3. Optional: Install handles and hardware.

Integrated Panel Dimensions

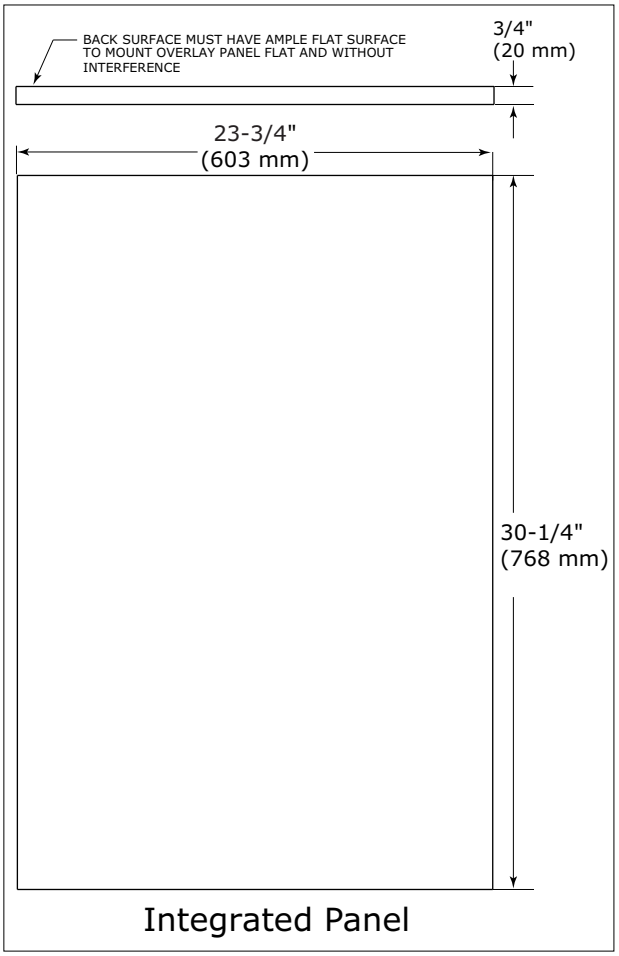

Integrated Panel Installation

1. Fully open door/drawer.

2. Starting at corner, pull gasket away from door/drawer.

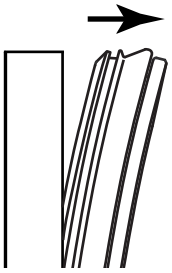

3. Continue to pull gasket free from gasket channel.

4. Upon removal, lay gasket down on a flat surface.

5. The panel should be aligned with the outside edge (opposite the hinge) and high enough to align with the highest point in the door/drawer.

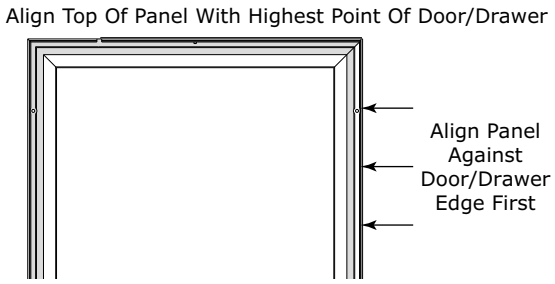

NOTICE

Due to differences in floor construction or surrounding cabinetry, the panel may not sit flush with the top of the door/drawer.

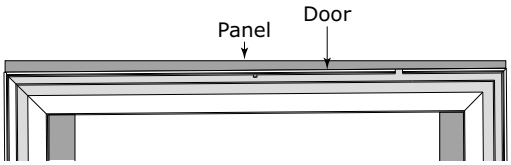

6. Secure integrated panel to door/drawer using clamps. A robust tape may also be used. U-Line recommends the use of bar clamps to secure the panel to the door/drawer. If using tape, be certain the tape will not damage panel finish upon removal.

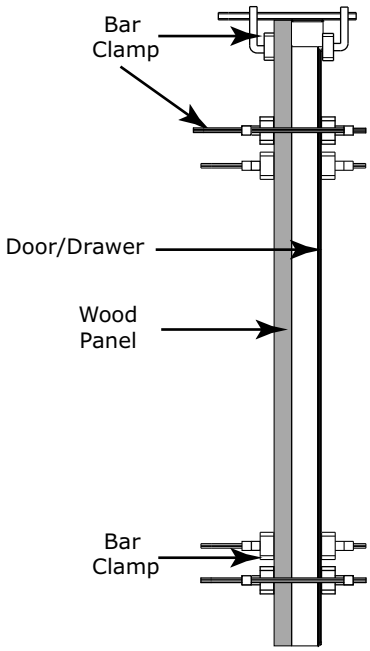

7. Using a 7/64" (3 mm) drill bit, drill 6 pilot holes into the wood panel 1/2" (12 mm) deep using the holes in the door/drawer frame as a guide.

NOTICE

It is important to ensure that all drilled holes are drilled to the correct depth in order to avoid splits in the wood when hardwood is installed.

8. Locate 6 of the #6x 1-1/4" (32 mm) screws provided with your unit.

9. Using a Phillips screwdriver, place one screw into each of the 6 pilot holes and screw down. Do not overtighten screws.

10. Be sure the screws force their way past the opening on the gasket channel and sit flush against the bottom of the channel.

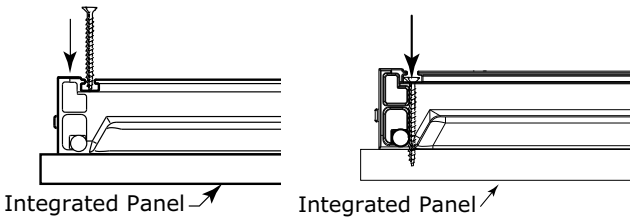

11. Remove clamps from door/drawer.

NOTICE

If panel requires additional adjustment after removing clamps, slightly loosen each screw and adjust panel as necessary. Tighten screws upon completion.

12. Starting at the corners, re-install the gasket into the gasket channel in the frame. Make sure the gasket is fully seated. This may take some force.

Grille - Plinth Installation

REMOVING AND INSTALLING GRILLE

⚠ WARNING

Disconnect electric power to the unit before removing the grille.

When using the unit, the grille (plinth strip/base fascia) must be installed.

⚠ WARNING

DO NOT touch the condenser fins. The condenser fins are SHARP and can be easily damaged.

Removing the grille

1. Disconnect power to the unit.
2. Loosen the two screws (1).
3. Remove grille (2) from unit.

Installing the grille

1. Align cabinet and grille holes and secure, but do not over tighten grille screws (1).
2. Reconnect power to the unit.

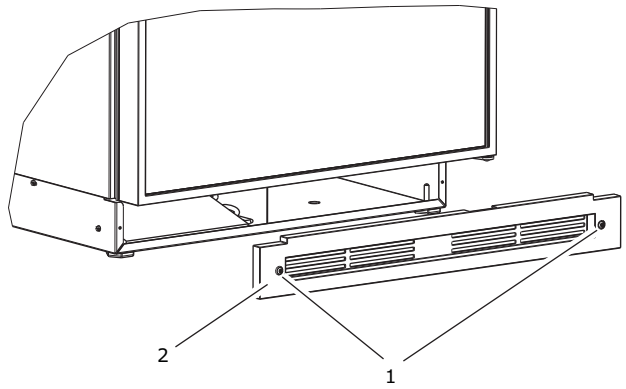

Door Swing

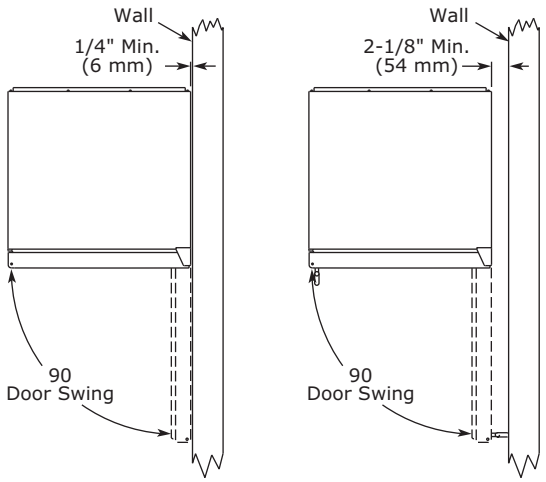

Units have a zero clearance for the door to open 90°, when installed adjacent to cabinets.

Stainless Steel and black and white models require 2-1/8" (54 mm) door clearance to accommodate the handle if installed next to a wall.

Integrated models require 1/4" (6 mm) clearance if installed next to a wall. Allow for additional space for any knobs or pulls installed on the integrated panel/frame.

Door Stop

Your U-Line unit was shipped to you with the optional 90° pin(s). (Models that are 15" wide include 1 pin. Models that are 24" wide include 2 pins.) The unit's door will open freely without a fixed opening angle limitation. If you would like the door stop at 90° follow these instructions.

NOTICE

The pin is designed to stop the door at 90° under normal operating conditions. It is not designed for excessive force. Do not use the door to move the unit in/out of the cutout during installation.

If your unit is already undercounter, it might need to be moved out/forward to access the hinge.

1. Locate the threaded pin.

2. With the door between 0° (closed) and 90° and using a 3/32" hex driver, install the threaded pin through the hinge.

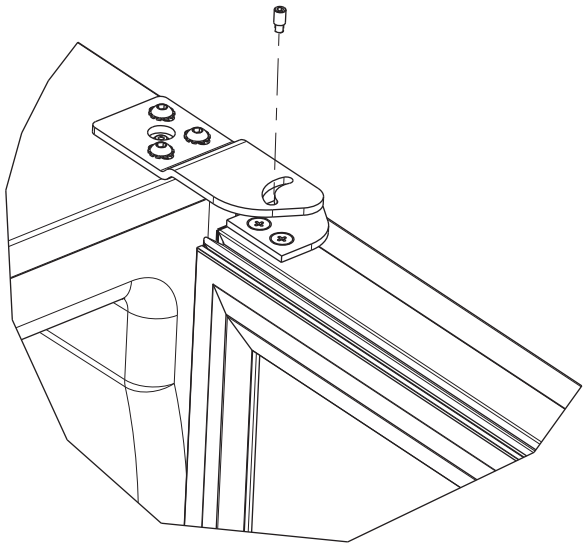

3. On 24" models, a second pin is included for the bottom hinge. Repeat steps above for second hinge.

NOTE: Threaded pin will be inserted from the bottom.

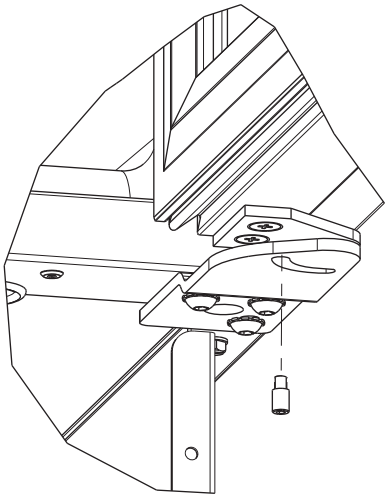

4. Carefully slide your unit back in place.

NOTICE

The pin can be removed to return the door swing back to its original state by unscrewing the threaded pin.

Door Adjustments

DOOR ALIGNMENT AND ADJUSTMENT

Align and adjust the door if it is not level or is not sealing properly. If the door is not sealed, the unit may not cool properly, or excessive frost may form in the interior.

NOTICE

Properly aligned, the door's gasket should be firmly in contact with the cabinet all the way around the door (no gaps). Carefully examine the door's gasket to ensure that it is firmly in contact with the cabinet. Also make sure the door gasket is not pinched on the hinge side of the door.

TO ALIGN AND ADJUST THE DOOR

Remove grille:

Remove the grille (see GRILLE-PLINTH INSTALLATION section of this guide).

1. Loosen (do not remove) top and bottom hinge screws.
2. Align door squarely with cabinet.
3. Make sure gasket is firmly in contact with cabinet all the way around the door (no gaps).
4. Tighten bottom hinge screws.
5. Tighten top hinge screws.

REVERSING THE DOOR

Location of the unit may make it desirable to mount the door on the opposite side of the cabinet.

The hinge hardware will be removed and installed on the opposite side of the cabinet.

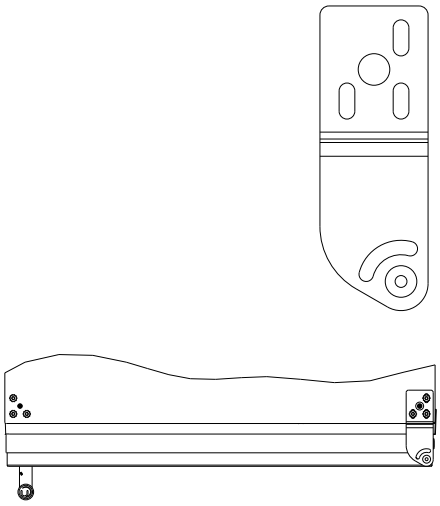

TO REVERSE THE DOOR

Remove grille:

Remove the grille (see GRILLE-PLINTH INSTALLATION section of this guide).

Remove top hinge and door:

1. Hold door to keep it from falling.
2. Remove top hinge from cabinet by removing three screws. Set aside and save for possible future use.

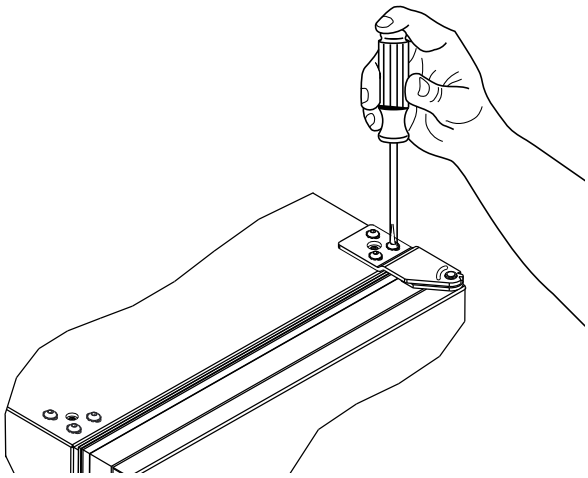

3. Remove door by tilting forward and lifting door off bottom hinge. Retain shoulder washers; they will be reused.

4. Remove four screws from hinge holes on the opposite side. Reinstall into holes where the hinge was removed. Take care not to scratch cabinet.

Remove and reinstall bottom hinge:

1. Remove bottom hinge from cabinet by removing three screws.

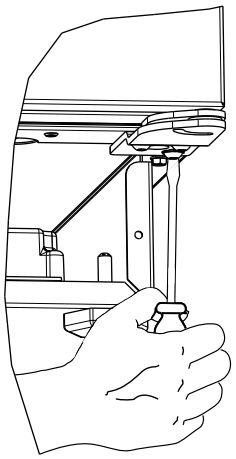

2. Remove corresponding screws on opposite side of cabinet.

3. Flip hinge plate over and reinstall on opposite side.

Prepare door for reinstallation:

1. Remove gasket. This will reveal mounting holes for the magnet assembly

2. Remove magnet assembly from door with T-10 TORX driver. Be sure to only remove the two screws holding the assembly to the door. Reinstall on the opposite end of the door

3. Rotate gasket 180°, aligning notch with magnet assembly and pressing firmly into the gasket channel starting at the corners.

4. Rotate door 180° to reverse.

Install top hinge and door:

1. Use alternate hinge supplied with unit and reinstall the screws. Do not tighten..

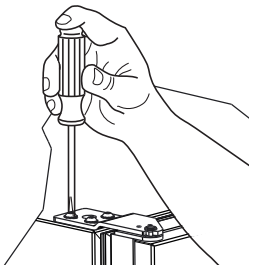

2. Lift the door on to the bottom hinge.

3. Align flat edge of the hinge with the outer edge of the unit.

4. Tighten three screws.

Align and adjust the door:

Align and adjust the door (see DOOR ALIGNMENT AND ADJUSTMENT).

Install grille:

Install the grille.

SHIFTING WINE RACK SPACERS (OPTIONAL)

NOTICE

Only perform these steps if you require wine rack clearance with a 90° door opening. Doors which are allowed to open past 90° do not require this step.

1. Remove wine rack (see WINE RACK INSTALLATION in Maintenance).

2. Starting from the side that has the spacers (previously unaltered units will be on the right hand side from the factory), remove 2 screws, slide and spacer.

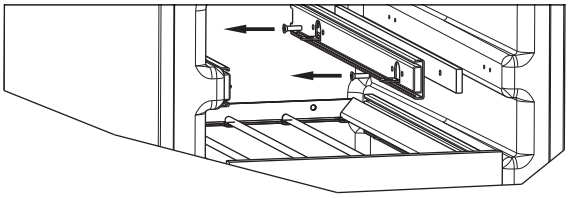

3. Reinstall the slide with the original 2 screws.

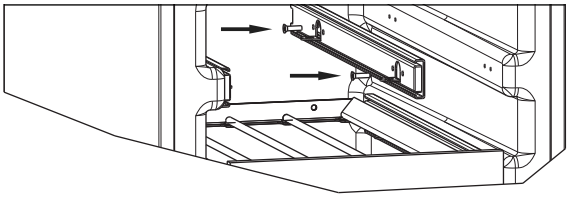

4. Remove 2 screws from the other side.

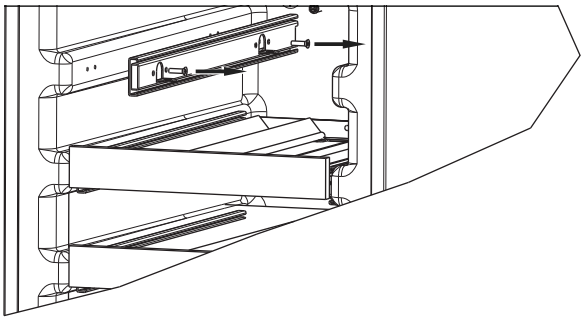

5. Place the spacer in between the liner and slide.

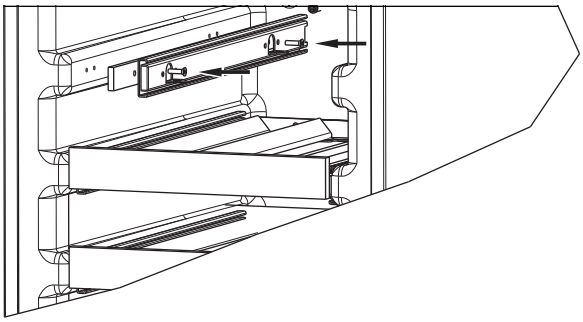

6. Install original hardware.

7. Slide wine rack back into position.

Wood Trim Finishing

The wine rack fronts are solid natural beech wood. They are factory coated with a clear vinyl sealer, which will sufficiently protect the wood in normal use.

You may coat the trim with stain and/or a final finish to match surrounding cabinetry.

⚠ CAUTION

You MUST remove the wood trim from the unit for staining or finishing to prevent permanent damage to the inner liner of the unit. Allow stain or finish to dry thoroughly (at least 24 hours for each coat) following the product manufacturer's instructions before reinstallation. Not following this warning may cause the inner liner of the unit to have a permanent odor, which the warranty will not cover.

U-Line recommends Minwax® Brand Water Based Stains and Minwax Polycrylic® Protective Finish.

NOTICE

Never use oil based stains or finishes.

On glass door models, the stain may appear darker when viewed through the glass.

Follow the manufacturers instructions for the stain and/or finish you select.

Free Standing Kit

The free standing kit is an optional accessory. It is only used when unit is not installed in surrounding cabinetry.

To install the kit:

1. Remove grille (see GRILLE-PLINTH INSTALLATION section).

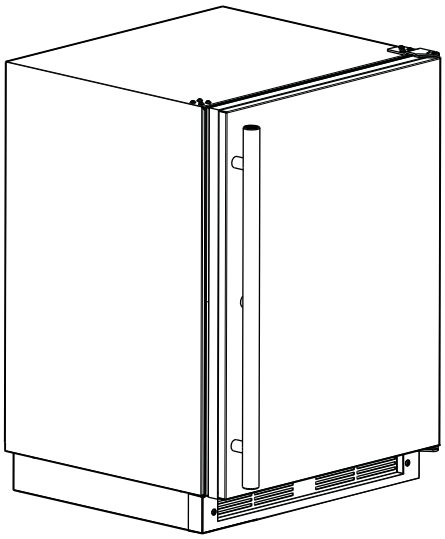

2. Place shell accessory over front and back of cabinet base, aligning holes of shell accessory with the holes on the base. Insert sheet metal screw in back of base.

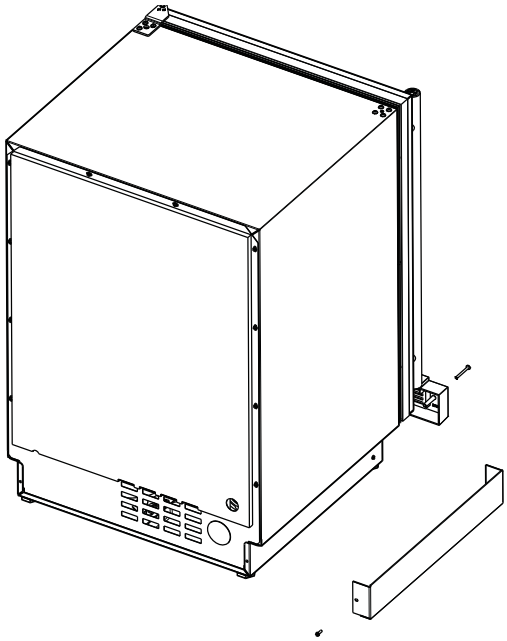

3. Align front hole with hole in shell accessory, hole in base, and hole in grille. Tighten screw.

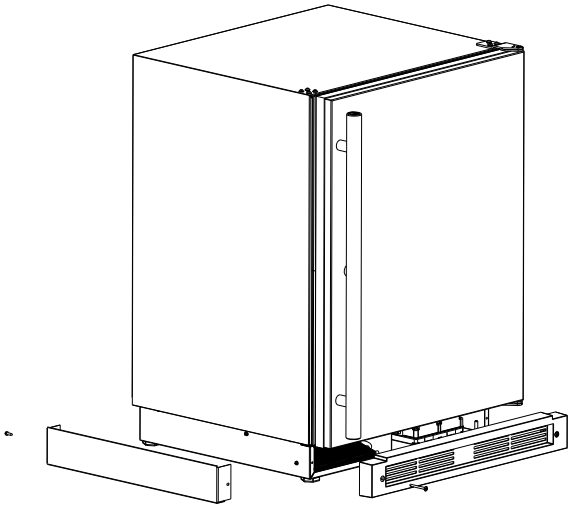

First Use

All U-Line controls are preset at the factory. Initial startup requires no adjustments.

NOTICE

U-Line recommends allowing the unit to run overnight before loading with product. As warm air rises, the temperature inside the unit tends to be slightly warmer at the top and slightly cooler at the bottom.

When plugged in, the unit will begin operating under the factory default settings. If the unit was turned off during installation, simply press ⏻ and the unit will immediately switch on. To turn the unit off, press ⏻.

Control Operation

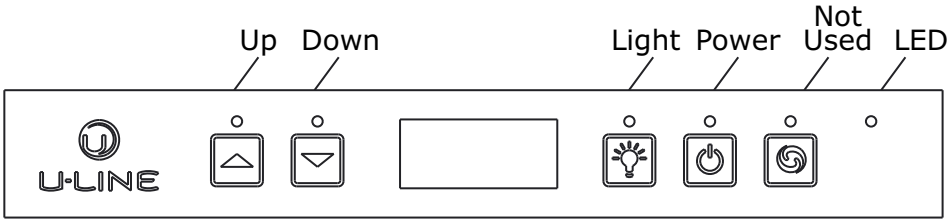

CONTROL FUNCTION GUIDE

FUNCTION	COMMAND	DISPLAY/OPTIONS
ON/OFF	Press ⏻ and release	Unit will immediately turn ON or OFF.
Toggle lights	Press 💡 and release to leave interior light on for 3 hours	Glass door wine and beverage centers only.
Adjust refrigerator set point	Press ⌃ or ⌄ and release	When the “F” or “C” in the display is flashing, press ⌃ or ⌄ to adjust the set point temperature.
View temperature in unit	Press ⌃ and ⌄ together and release	The display will flash and then toggle from set point to temperature in unit.
Toggle between F/C	Hold ⌃ and ⌄ for 5 seconds	The display will change units.

DOOR ALERT NOTIFICATION

When the door is left open for more than 5 minutes:

- An audible tone will sound for several seconds every minute.
- “dr” will appear in display.

Close door to silence alert and reset.

Sabbath Mode

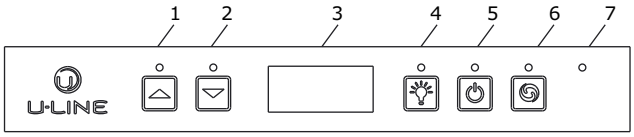

This unit is Star-K certified and offers a Sabbath mode. Sabbath mode disables system responses to user initiated activities and all external functions, including lighting, display and audible alarms. The unit will still maintain internal temperatures and set points. View a full list of Star-K certified U-Line units at www.star-k.org.

To enable Sabbath Mode:

1. Press (4) and hold for ten seconds and release (the °F/°C symbol will flash briefly at the end of the ten second period).

2. The interior light and control display (3) will go dark until user resets mode.

3. NOTE: Although the display will not be visible, the temperature controls in the unit remain active and preserve the interior temperature.

Sabbath Mode remains active until (4) is quickly pressed and released.

Airflow and Product Loading

NOTICE

The unit requires proper airflow to perform at its highest efficiency. Do not block the front grille, or the unit will not perform as expected. Do not install the unit behind a door. When loading your unit, leave space between the evaporator and product loaded. Anything in direct contact with the evaporator is subject to freezing.

When properly loaded, your U-Line unit will store up to 105 (12 oz. [330 ml]) cans or 85 (12 oz. [330 ml]) bottles and 16 (750 ml) bottles of wine.

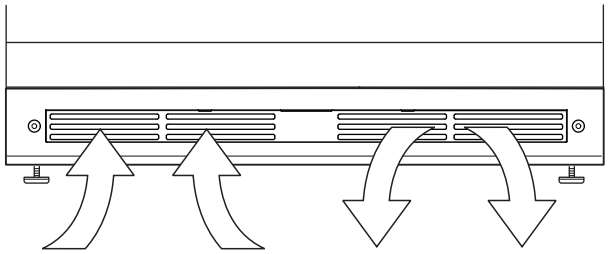

U-Line Wine Guide

LOOKING BEHIND THE LABEL

To most, wine is a delicious mystery. We purchase it, uncork it, and savor its taste and beauty. But there is so much more to true wine appreciation. Many secrets are simply too good to keep bottled up.

WINE SELECTIONS SUGGESTIONS

Selecting the right wine for the right occasion can sometimes be a seemingly awkward or difficult task for the beginning wine enthusiast. We would therefore like to present you with a few suggestions which may provide a little more confidence and enjoyment when choosing and serving your wines.

When selecting wines, keep an open mind and do not be afraid to be adventurous. Do not view the subject of wine so seriously it discourages you from learning and discovering for fear of embarrassment if something is incorrect. Wine is best viewed as a hobby and enjoyed.

When assembling your collection, try not to become obsessed with "Vintages." Although a chart can be a useful tool, generalizations about a specific year have led more than one collector to disappointment. Often an "Off Year" will provide a better value and more drinking enjoyment.

The primary guideline to the subject of wine is your own palate. Do not be afraid to make mistakes. Experiment, discover, but most of all, enjoy yourself and your new U-Line product.

Guide To Common Styles Of Wine

Red Wines		
Full-Bodied Dry	California French Italian	Zinfandel, Cabernet Rhone, Chateauneuf-du-Pape Barbaresco, Barolo
Medium-Bodied Dry	California French	Pinot Noir Bordeaux, Burgundy
Light-Bodied Dry	French Italian	Beaujolais Chianti, Bardolino
White Wines		
Full-Bodied Dry	California French	Chardonnay Montrachet, Meursault Puligny-Montrachet
Medium-Bodied Dry	California French	Sauvignon-Blanc Pouilly-Fuisse, Sancerre, Vouvray, Graves
Light-Bodied Dry	French	Chablis, Muscadet, Pouilly-Fume
Full-Bodied, Very Sweet	Germany French Hungary	Beerenauslese Sauternes Tokay
Medium-Bodied, Semi-Sweet	California Germany	Gewurtztraminer Liebfraumilch
Light-Bodied Off Dry	Germany	Rhine, Mosel, Riesling

Matching Food and Wine

Although there are no hard fast rules for matching wine to food, observe some guidelines. Delicate dishes should be accompanied by lighter more delicate wines. Full-flavored foods should be matched with fuller-bodied wines.

As a general rule, one should aim to ascend in flavor and quality of wines served.

Serve a:	Before a:
DRY wine	SWEET wine
WHITE wine	RED wine
YOUNG wine	OLD wine
LIGHT-BODIED wine	FULL-BODIED wine

Any step back in quality will be noticed. If a fine wine is tasted prior to a lesser wine, many of the fine wine's subtle qualities may be missed.

Common Food and Wine Matches

Foods	Wines
Fish, Shell Fish, Crab, Oysters	Dry White Wines, Light Sparkling or Extra Dry Champagne
Beef, Venison	Full-Bodied Red Wines
Pork, Veal, Lamb and Poultry	Light-Bodied Red Wines
Fruit	Sweet White and Sparkling Wines

A Toast to Wine Truths

Like the grapes themselves, many wine myths have been cultivated over the centuries.

Myth 1: Most wines taste better when aged.

Truth: In fact, less than 5% of wines produced today are meant to be aged. Most wines are crafted to be consumed within the first one to two years.

Myth 2: Wines should be uncorked and decanted allowing them to "breathe."

Truth: To breathe or not breathe? While it is better to allow a young tannic Red to breathe in a glass or decanter to soften the tannins, an old Red reaches a stage in its life where it should be enjoyed soon after opening. Allow an old Red to breathe for a short time to dissipate any off odors. Most white wines can be served, ideally, 10-15 minutes after opening.

Myth 3: When age worthy wines peak, they must be consumed almost immediately.

Truth: Most great wines reach a plateau period rather than a peak. Great Bordeaux's may have as much as a 10-year plateau before fading.

Myth 4: Wine color does not change with aging.

Truth: As red wines age they get lighter in color while whites get darker.

The Cork: A Mystery on Its Own

Cork Presentation. The ritual of the presentation of the cork has a rich and fascinating history dating back to the late 1800's. A phylloxera (root louse) devastation to the vineyards severely limited the supply of great wines. Restaurateurs would remove labels on inferior wines and replace them with labels from superior wines. This made it necessary for patrons to protect themselves by checking the branding on the cork to ensure that what they ordered was, in fact, what they were served.

When presented with a cork today, feel it to check for its integrity, read and match the branding on the cork to the bottle and set it aside. There is little to be learned from the cork. The proof is in the wine.

"Corked" wines. If you've ever had a wine that smelled or tasted of mold, you've experienced a wine that may have been "corked." Today, between five and eight percent of wines are tainted with Trichloroanisole (TCA). This substance, found naturally in plants and trees, is imparted to the wine through the cork. Corked wines are a major concern for winemakers as it destroys millions of cases per year and puts reputations at stake. Amazing as it may seem twist-off caps may offer a better alternative and many great wineries in California, Australia and New Zealand are pioneering the trend.

Common Tasting Terms

Terminology	Description
Acidity	A critical element of wine that is responsible for preserving the wines freshness. Excess acidity results in an overly tart and sour wine.
Balance	A desired trait where tannin, fruit and acidity are in total harmony. Wines with good balance tend to age gracefully.
Body	The weight and presence of wine in the mouth provided by the alcohol and tannin level. Full-bodied wines tend to have this strong concentration.
Bouquet	The blending of a wine's aroma within the bottle over a period of time, caused by volatile acidity.
Complex	A subjective term often used in tasting. A wine is said to be complex if it offers a variety of flavors and scents that continue to evolve as it develops.
Flabby	A wine that lacks structure, or is heavy to the taste, lacks acidity.
Full-Bodied	Wine high in alcohol and extract, generally speaking, fills the mouth, powerful.
Lean	Generally describes wines that are slim, lacking of generosity or thin.
Oaky	A desirable flavor imparted to wine if done in moderation. Most wines are aged in oak barrels one to three years, thereby receiving this toasty oak characteristic. However, if a weak wine is left in contact too long with an oak barrel it will tend to be overpowered with an oaky taste.
Tannin	Tannins are extracted from the grape skins and stems and are necessary for a well-balanced red wine. Tannins are easily identified in wine tasting as the drying sensation over the gums. Tannins generally fade as a wine ages.

IDEAL WINE STORAGE CONSIDERATIONS

Temperature: The most important element about storage temperature is stability. If wine is kept in a stable environment between 40°F (7°C) and 65°F (21°C), it will remain sound. A small 1-2 degree temperature fluctuation within a stable environment is acceptable. Larger temperature fluctuations can affect the corks ability to seal, allowing the wine to "leak" from the bottle.

Humidity: The traditional view on humidity maintains that wines should be stored on their sides in 50% - 80% relative humidity to ensure cork moisture and proper fit in the bottle. Contemporary wisdom suggests that the cork surface is too small to be impacted by humidity. Further the cork is sealed with a metal or wax capsule making humidity penetration impossible. The concept of a humid storage environment was derived from the necessity of wineries to maintain moisture in their cellars to keep wooden barrel staves swollen, preventing wine evaporation and product loss. In fact, vineyards estimate as much as a 10% product loss per year due to evaporation while wine is aging in the wooden barrels. Humidity, however, was not intended for the modern home cellar where wine is stored in glass bottles with sealed corks.

Light: UV rays are not only harmful to people, they are damaging to wines - especially those in clear bottles. Since oxygen molecules in wine absorb UV rays, wine should never be stored in direct light for long periods of time.

Vibration: Provided that sediment is left undistributed and particles are not suspended, vibration in a storage environment is not an issue. Wines can become flat or tired when voids and vacuums are created inside the wine bottle. In order to create voids and vacuums within a liquid, aggressive motion or shaking of the wine bottle would have to occur.

The Right Temperature for Wine

Temperature	Wines
Approximately 60°F (15°C)	Red
50°F - 55°F (10°C -12°C)	White
Approximately 45°F (7°C)	Sparkling

Wine Captain® Models - A Touch of Elegance

In 1985 U-Line was the first North American appliance manufacturer to develop a residential wine storage unit, the Wine Captain®. Each U-Line Wine Captain® model is designed to impress and inspire anyone with an interest in wine by providing cellar conditions in stylish, undercounter units. U-Line Wine Captain® models offer stable storage temperatures, a 50% internal relative humidity and protection from UV light rays. U-Line has the largest product offering available, making storing, presenting, and sharing your wine effortless and elegant.

Recommended Wine Storage

Specially designed horizontal wine racks properly position the bottles so the wine remains in contact with the cork, which ensures the cork does not become dry.

U-Line recommends arranging wine bottles as shown in the illustrations below.

Racks 1 and 2:

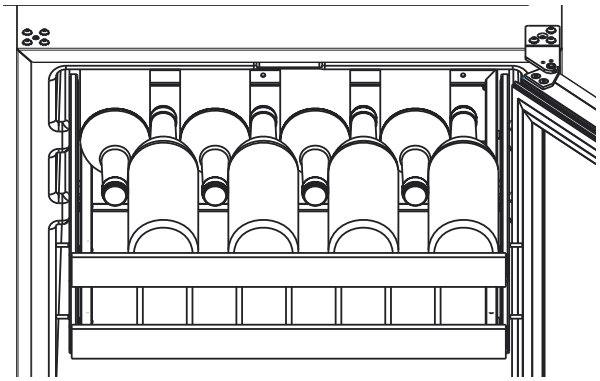

NOTE: After stocking, allow unit to stabilize product temperatures for 24 hours.

Interior Shelves

REMOVING AND INSTALLING INTERIOR SHELVES

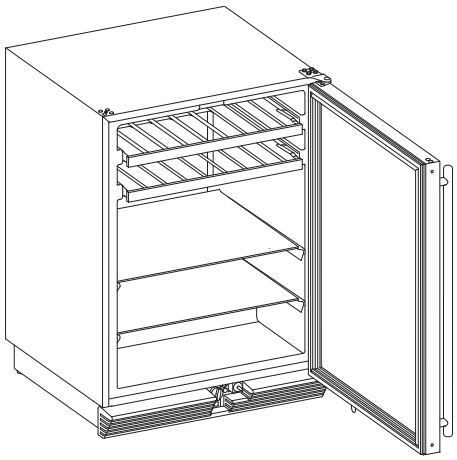

For models equipped with glass shelves having shelf supports, remove the shelves as follows:

1. Open door completely.

2. Grasp the shelf edge in the center and slide the shelf from the unit.

Insert the shelves as follows:

1. With the door still fully opened, reposition the shelf as required, ensure the raised white edge strip is toward the rear of the unit and slide the shelf back into position.

NOTICE

Make sure the shelves are inserted fully into the unit.

The edge strip toward the rear prevents cans and bottles from freezing against the cold evaporator.

Cleaning

EXTERIOR CLEANING

Vinyl Clad (Black or White)

Clean surfaces with a mild detergent and warm water solution. Do not use solvent-based or abrasive cleaners. Use a soft sponge and rinse with clean water. Wipe with a soft, clean towel to prevent water spotting.

Clean any glass surfaces with a non-chlorine glass cleaner.

Stainless Models

Stainless door panels, handles and frames can discolor when exposed to chlorine gas, pool chemicals, saltwater or cleaners with bleach.

Keep your stainless unit looking new by cleaning with a good quality all-in-one stainless steel cleaner and polish monthly. For best results use Claire® Stainless Steel Polish and Cleaner. Comparable products are acceptable. Frequent cleaning will remove surface contamination that could lead to rust. Some installations may require cleaning weekly.

Do not clean with steel wool pads.

Do not use stainless steel cleaners polishes on any glass surfaces.

Clean any glass surfaces with a non-chlorine glass cleaner.

Do not use cleaners not specifically intended for stainless steel on stainless surfaces (this includes glass, tile and counter cleaners).

If any surface discoloring or rusting appears, clean it quickly with Bon-Ami® or Barkeepers Friend Cleanser® and a nonabrasive cloth. Always clean with the grain. Always finish with Claire® Stainless Steel Polish and Cleaner or comparable product to prevent further problems.

Using abrasive pads such as Scotchbrite™ will cause the graining in the stainless steel to become blurred.

Rust not cleaned up promptly can penetrate the surface of the stainless steel and complete removal of the rust may not be possible.

Integrated Models

To clean integrated panels, use household cleaner per the cabinet manufacturer's recommendation.

INTERIOR CLEANING

Disconnect power to the unit.

Clean the interior and all removed components using a mild nonabrasive detergent and warm water solution applied with a soft sponge or non-abrasive cloth.

Rinse the interior using a soft sponge and clean water.

Do not use any solvent-based or abrasive cleaners. These types of cleaners may transfer taste to the interior products and damage or discolor the interior.

DEFROSTING

Under normal conditions this unit does not require manual defrosting. Minor frost on the rear wall or visible through the evaporator plate vents is normal and will melt during each off cycle.

If there is excessive build-up of 1/4" (6 mm) or more, manually defrost the unit.

Ensure the door is closing and sealing properly.

High ambient temperature and excessive humidity can also produce frost.

⚠ CAUTION

DO NOT use an ice pick or other sharp instrument to help speed up defrosting. These instruments can puncture the inner lining or damage the cooling unit. DO NOT use any type of heater to defrost. Using a heater to speed up defrosting can cause personal injury and damage to the inner lining.

NOTICE

The drain pan was not designed to capture the water created when manually defrosting. To prevent water from overflowing the drain pan, place towels or other absorbent materials over the interior drain trough (under the evaporator) before defrosting.

To defrost:

1. Disconnect power to the unit.
2. Remove all products from the interior.
3. Prop the door in an open position (2 in. [50 mm] minimum).
4. Allow the frost to melt naturally.
5. After the frost melts completely clean the interior and all removed components. (See INTERIOR CLEANING).
6. When the interior is dry, reconnect power and turn unit on.

Cleaning Condenser

INTERVAL - EVERY SIX MONTHS

To maintain operational efficiency, keep the front grille free of dust and lint, and clean the condenser when necessary. Depending on environmental conditions, more or less frequent cleaning may be necessary.

⚠ WARNING

Disconnect electric power to the unit before cleaning the condenser.

⚠ WARNING

DO NOT touch the condenser fins. The condenser fins are SHARP and can be easily damaged.

NOTICE

DO NOT use any type of cleaner on the condenser unit.

1. Remove the grille.

2. Clean the condenser coil using a using a soft brush with a “combing” action or vacuum cleaner.

3. Install the grille.

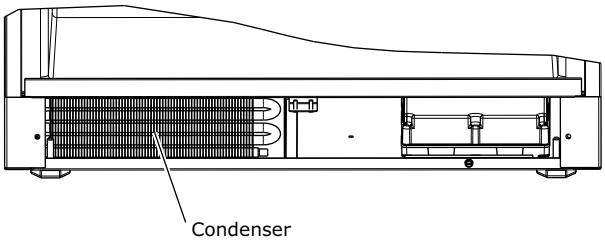

Wine Rack Installation

To remove rack from the cabinet:

1. Remove any bottles stored on the rack.

2. Grasp the end of the rack and gently slide it out until it stops.

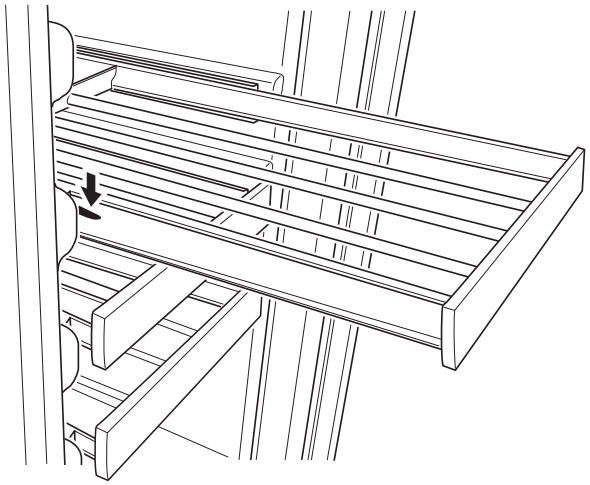

3. Press the left rack release lever down. At the same time, lift the matching right rack release lever up. Pull the rack out until it is free of the tracks and the cabinet.

NOTICE

Do not remove the track rails from the cabinet.

To insert rack in the cabinet:

1. Align the left and right rack channels with the tracks in the cabinet. Ensure an even track engagement on both sides by gently pushing the rack into the cabinet until it stops.

2. Before reloading the rack, ensure proper movement of the travel stops in the left and right track rails by pulling the rack out gently until it stops.

Extended Non-Use

VACATION/HOLIDAY, PROLONGED SHUTDOWN

The following steps are recommended for periods of extended non-use:

1. Remove all consumable content from the unit.
2. Disconnect the power cord from its outlet/socket and leave it disconnected until the unit is returned to service.
3. If ice is on the evaporator, allow ice to thaw naturally.
4. Clean and dry the interior of the unit. Ensure all water has been removed from the unit.
5. The door must remain open to prevent formation of mold and mildew. Open door a minimum of 2" (50 mm) to provide the necessary ventilation.

WINTERIZATION

If the unit will be exposed to temperatures of 40°F (5°C) or less, the steps above must be followed.

For questions regarding winterization, please call U-Line at +1.800.779.2547.

⚠ CAUTION

Damage caused by freezing temperatures is not covered by the warranty.

Troubleshooting

BEFORE CALLING FOR SERVICE

If you think your U-Line product is malfunctioning, read the CONTROL OPERATION section to clearly understand the function of the control.

If the problem persists, read the NORMAL OPERATING SOUNDS and TROUBLESHOOTING GUIDE sections below to help you quickly identify common problems and possible causes and remedies. Most often, this will resolve the problem without the need to call for service.

IF SERVICE IS REQUIRED

If you do not understand a troubleshooting remedy, or your product needs service, contact U-Line Corporation directly at +1.800.779.2547.

When you call, you will need your product Model and Serial Numbers. This information appears on the Model and Serial number plate located on the upper right or rear wall of the interior of your product.

NORMAL OPERATING SOUNDS

All models incorporate rigid foam insulated cabinets to provide high thermal efficiency and maximum sound reduction for its internal working components. Despite this technology, your model may make sounds that are unfamiliar.

Normal operating sounds may be more noticeable because of the unit's environment. Hard surfaces such as cabinets, wood, vinyl or tiled floors and paneled walls have a tendency to reflect normal appliance operating noises.

Listed below are common refrigeration components with a brief description of the normal operating sounds they make. NOTE: Your product may not contain all the components listed.

- Compressor: The compressor makes a hum or pulsing sound that may be heard when it operates.
- Evaporator: Refrigerant flowing through an evaporator may sound like boiling liquid.
- Condenser Fan: Air moving through a condenser may be heard.
- Automatic Defrost Drain Pan: Water may be heard dripping or running into the drain pan when the unit is in the defrost cycle.

TROUBLESHOOTING GUIDE

⚠ DANGER

ELECTROCUTION HAZARD. Never attempt to repair or perform maintenance on the unit before disconnecting the main electrical power.

Troubleshooting - What to check when problems occur:

Problem	Possible Cause and Remedy
Digital Display and Light Do Not Work.	Ensure power is connected to the unit. If the unit is cooling, it may be in Sabbath mode.
Interior Light Does Not Illuminate.	If the unit is cooling, it may be in Sabbath mode.
Light Remains on When Door Is Closed.	For glass door models, press the light icon and close the door. Check light actuator under door.
Unit Develops Frost on Internal Surfaces.	Frost on the rear wall is normal and will melt during each off cycle. If there is excessive build-up of 1/4" or more, manually defrost the unit. Ensure the door is closing and sealing properly. High ambient temperature and excessive humidity can also produce frost.
Unit Develops Condensation on External Surfaces.	The unit is exposed to excessive humidity. Moisture will dissipate as humidity levels decrease.
Digital Display Functions, But Unit Does Not Cool.	Ensure the unit is not in "Showroom Mode." Momentarily unplug or interrupt power supply to the unit.
Digital Display Shows ER or E Followed by a Number.	E3 indicates the door may be opened too long. Ensure the door is closing properly. For other error codes contact U-Line Customer Service.

Problem	Possible Cause and Remedy
Product Is Freezing.	Because product in contact with the rear wall may freeze, ensure no product is touching the rear wall. Adjust the temperature to a warmer set point.
Product Is Not Cold Enough.	Air temperature does not indicate product temperature. See CHECKING PRODUCT TEMPERATURE below. Adjust the temperature to a cooler set point. Ensure unit is not located in excessive ambient temperatures or in direct sunlight. Ensure the door is closing and sealing properly. Ensure the interior light has not remained on too long. Ensure nothing is blocking the front grille, found at the bottom of the unit. Ensure the condenser coil is clean and free of any dirt or lint build-up.

CHECKING PRODUCT TEMPERATURE

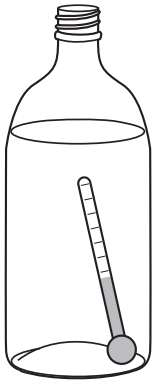

To check the actual product temperature in the unit:

1. Partially fill a plastic (nonbreakable) bottle with water.
2. Insert an accurate thermometer.
3. Tighten the bottle cap securely.
4. Place the bottle in the desired area for 24 hours.
5. Avoid opening the unit during the testing period.
6. After 24 hours, check the temperature of the water. If required, adjust the temperature control in a small increment (see CONTROL OPERATION).

Causes which affect the internal temperatures of the cabinet include:

- Temperature setting.
- Ambient temperature where installed.
- Installation in direct sunlight or near a heat source.
- The number of door openings and the time the door is open.
- The time the internal light is illuminated. (This mainly affects product on the top rack or shelf.)
- Obstruction of front grille or condenser.

U-Line Corporation (U-Line) Limited Warranty

One Year Limited Warranty

For one year from the date of original purchase, this U-Line product warranty covers all parts and labor to repair or replace any part of the product that proves to be defective in materials or workmanship. For products installed and used for normal residential use, material cosmetic defects are included in this warranty, with coverage limited to 60 days from the date of original purchase. All service provided by U-Line under the above warranty must be performed by U-Line factory authorized service, unless otherwise specified by U-Line. Service provided during normal business hours.

Available Second Year Limited Warranty

Beyond the standard one year warranty outlined above, U-Line offers an extension of the one year warranty coverage for an additional second year from the date of purchase, free of charge. To take advantage of this second year warranty, you must register your product with U-Line within two months from the date of purchase at u-line.com providing proof of purchase.

Five Year Sealed System Limited Warranty

For five years from the date of original purchase, U-Line will repair or replace the following parts, labor not included, that prove to be defective in materials or workmanship: compressor, condenser, evaporator, drier, and all connecting tubing. All service provided by U-Line under the above warranty must be performed by U-Line factory authorized service, unless otherwise specified by U-Line. Service provided during normal business hours.

Terms

These warranties apply only to products installed in any one of the fifty states of the United States, the District of Columbia, or the ten provinces of Canada. The warranties do not cover any parts or labor to correct any defect caused by negligence, accident or improper use, maintenance, installation, service, repair, acts of God, fire, flood or other natural disasters. The product must be installed, operated, and maintained in accordance with the U-Line User Guide.

The remedies described above for each warranty are the only ones that U-Line will provide, either under these warranties or under any warranty arising by operation of law. U-Line will not be responsible for any consequential or incidental damages arising from the breach of these warranties or any other warranty, whether express, implied, or statutory. Some states do not allow the exclusion or limitation of incidental or consequential damages, so the above limitation or exclusion may not apply to you. These warranties give you specific legal rights, and you may also have other rights which vary from state to state.

Any warranty that may be implied in connection with your purchase or use of the product, including any warranty of *merchantability* or any warranty *fit for a particular purpose* is limited to the duration of these warranties, and only extends to five years in duration for the parts described in the section related to the five year limited warranty above. Some states do not allow limitations on how long an implied warranty lasts, so the above limitations may not apply to you.

- The warranties only apply to the original purchaser and are non-transferable.
- The second year and five year warranties cover products installed and used for normal residential or designated marine use only.
- The warranties apply to units operated outside only if designed for outdoor use by model and serial number.
- Replacement water filters, light bulbs, and other consumable parts are not covered by these warranties.
- The start of U-Line's obligation is limited to four years after the shipment date from U-Line.
- In-home instruction on how to use your product is not covered by these warranties.
- Food, beverage, and medicine loss are not covered by these warranties.
- If the product is located in an area where U-Line factory authorized service is not available, you may be responsible for a trip charge or you may be required to bring the product to a U-Line factory authorized service location at your own cost and expense.
- Units purchased after use as floor displays, and/or certified reconditioned units, are covered by the limited one year warranty only and no coverage is provided for cosmetic defects.
- Signal issues related to Wi-Fi connectivity are not covered by these warranties.

For parts and service assistance, or to find U-Line factory authorized service near you, contact U-Line:
8900 N. 55th Street, Milwaukee, WI 53223 • u-line.com • onlineservice@u-line.com • +1.800.779.2547

Copyright © 2014/2017 U-Line Corporation. All Rights Reserved. | Publication Number 30379 | 10/2017 Rev. L

Wire Diagram

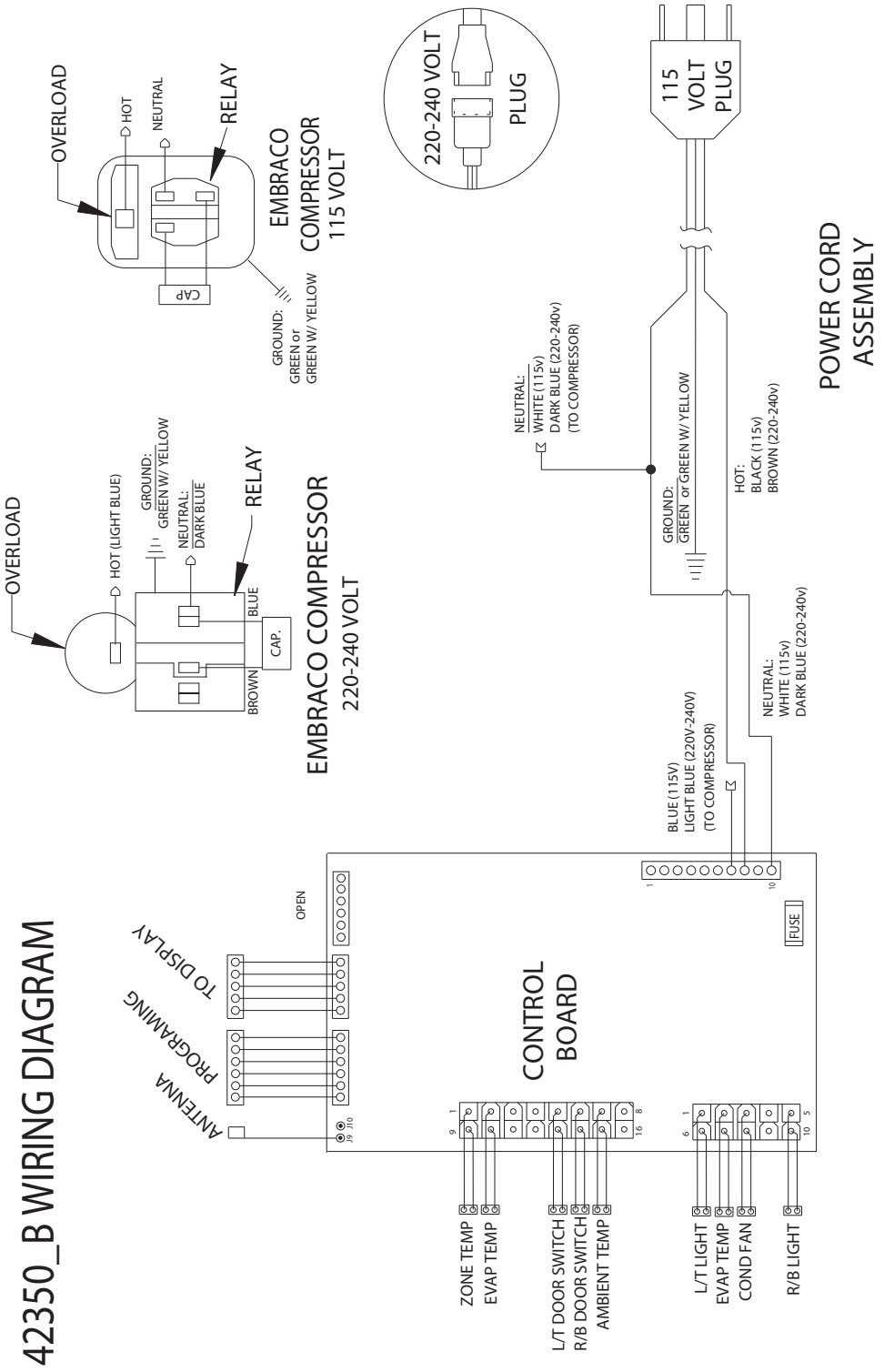

Product Liability

Field service technicians are authorized to make an initial assessment in the event of reported damages. If there are any questions about the process involved, the technician should call U-Line for further explanation.

While inspecting for defects or installation issues, photos should be taken to document any damages or issues found.

During the assessment, if the service technician is able to find the source of the damage and it can be resolved by replacement of a part, the servicer is authorized to replace the part in question. The part that caused the damage must be returned to U-Line in its entirety. The part must be clearly labeled with the serial number of the unit it was removed from, the date, and the servicer who removed the part.

If the service technician determines the damage is the result of installation issues (water connection/drain, etc.), the consumer would be notified and the issues shall be resolved at the direction of the consumer.

If damage is evident and the service technician is unable to find the source, U-Line must be contacted at 1-800-799-2547 for further direction

8900 N. 55th Street • Milwaukee, WI 53223
T: +1.414.354.0300 • F: +1.414.354.354.5696
Website: www.u-line.com

Right product. Right place.
Right temperature Since 1962.

Warranty Claims

The following information defines the parameters for filing a warranty claim:

- Valid serial number needed
- Valid model number needed
- Narda (or equivalent) form or submitted online at www.u-line.com
- 60 day submittal deadline from date of completed service
- Only one repair or unit per warranty claim
- Refrigerant should be labeled and included on the labor submittal
- Door and water level adjustments are covered 30 days from install date.

Serial Number Requirements:

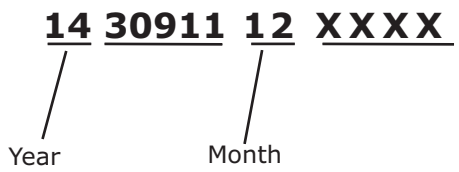

A typical serial number is shown above. The first two digits of the first segment, 14, represents the production year. The number between the dashes, 12, represents the production month. In most cases, warranty status can be verified by the production date information within the serial number.

- Alternatively, a Proof of Purchase (or equivalent) may submitted with the warranty claim to document warranty status. We also accept the following information to verify warranty status:
- New Construction Occupancy Documents
- Closing Paperwork
- Final Billing – Remodel

Noting all of the following on the warranty claim will be considered proof of purchase, hard copy will not be required:

- Name of the selling Dealer
- Date of purchase/installation
- Order or Invoice number (if available)
- Description of document reviewed (i.e. store receipt, closing paperwork, etc)

Parts and labor claims are paid separately. Indicate part numbers and description for parts used in the warranty repair. Include the purchase invoice and name of the parts supplier used to procure the parts.

Parts

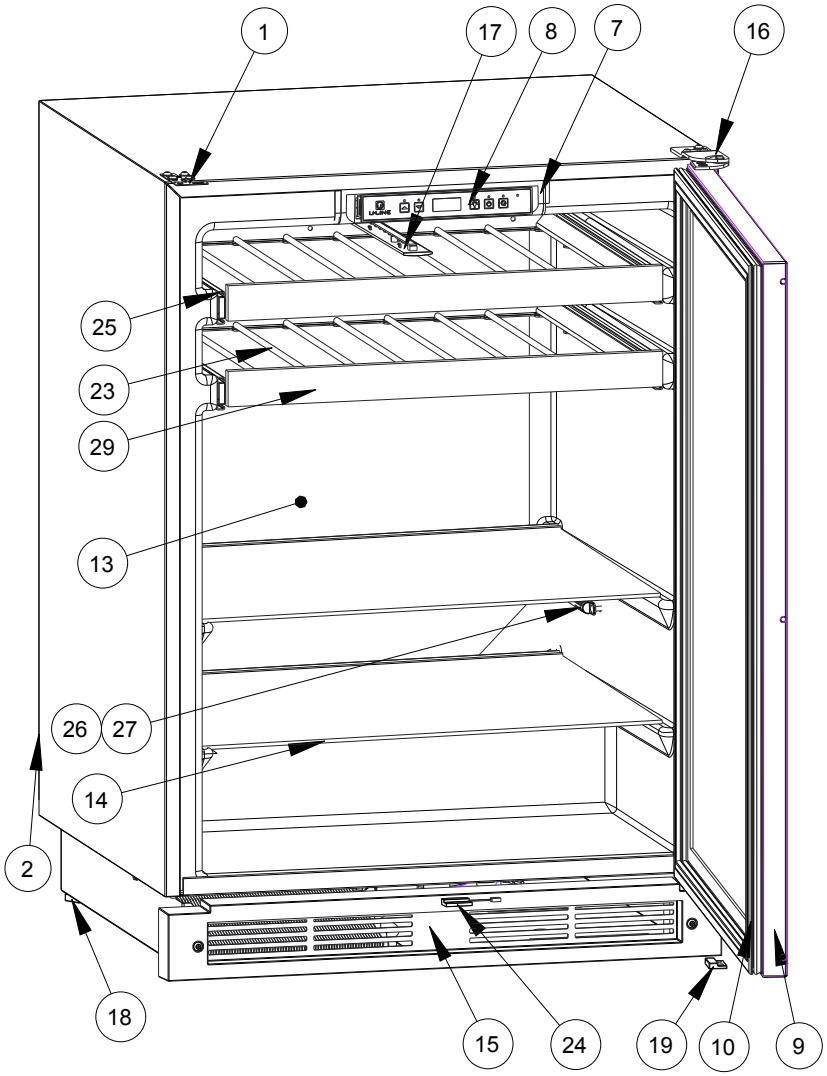

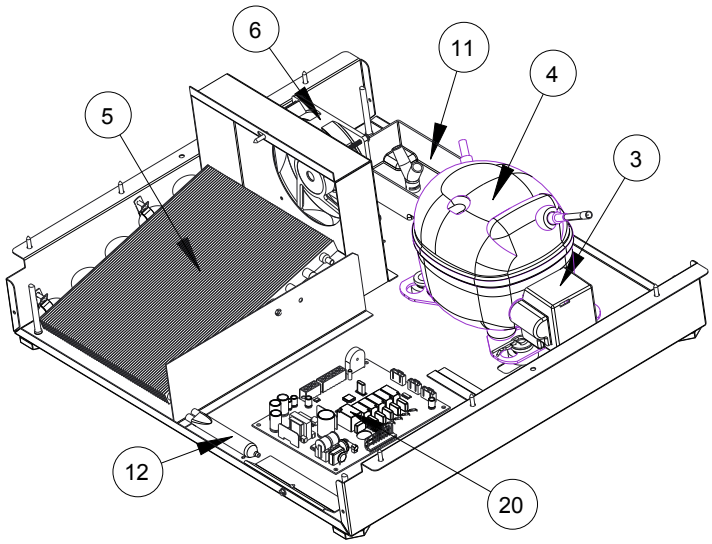

U-1224BEVINT-60B		
Item	Description	U-Line P/N
1	Anti tip brackets w/screws	80-54239-00
2	Back panel	80-54204-00
3	Compressor eletricals only	80-54149-00
4	Compressor w/electricals	80-54150-00
5	Condenser assembly	80-54264-00
6	Condenser fan w/screws	80-54014-00
7	Control Housing	80-54265-00
8	Display module	80-54266-00
9	Door assembly w/ hinges	80-54270-00
10	Gasket, door	80-54213-00
11	Drain pan w/double sided tape	80-54217-00
12	Drier	80-54055-00
13	Evaporator assembly	80-54262-00
14	Glass shelf (1) w/edge trim	80-54268-00
15	Grille w/ screws	80-54267-00
16	Hinges (2) w/screws	80-54208-00
17	LED light strip and cover assy	80-54000-00
18	Leg Levelers (4)	80-54201-00
19	Magnet w/bkt and screws (2)	80-54250-00
20	Main board (no case or wires)	80-54008-00
21	Packaging	80-54209-00
22	Power cord	80-54171-00
23	Rack assembly	80-54269-00
24	Reed switch assembly	80-54284-00
25	Slide assembly	80-54219-00
26	Thermistor (1 pc)	80-54006-00
27	Thermistor cover and pin	80-54023-00
28	Wire harness, board	80-54251-00
29	Wood front w/screws	80-54283-00

Ordering Replacement Parts

If you have a purchasing account, please utilize our service website to order parts.

Orders may also be placed by Fax or phone. See our contact information below:

www.U-LineService.com (with service login)
FAX Number: +1.414.354.5696
Phone Number: +1.800.779.2547

NOTICE

Use only genuine U-Line replacement parts. The use of non-U-Line parts can reduce speed of ice production, cause water to overflow from ice maker mold, damage the unit, and void the warranty.

Warranty parts will be shipped at no charge after U-Line confirms warranty status. Please provide the model, serial number, part number and part description. Some parts will require color or voltage information.

If U-Line requires the return of original parts, we will inform you when the parts order is taken. This requirement will be noted on your packing list. A prepaid shipping label will be included with the replacement part. Please enclose a copy of the parts packing list and any labor claims with your return. Please be sure the model and serial numbers are legible on the paperwork. Tag the part with the reported defect.

When ordering a non-warranty part, you will need an open account and tax exemption on file at U-Line. Another option would be to visit www.u-line.com to locate an authorized parts distributor in your area.

System Diagnosis Guide

REFRIGERATION SYSTEM DIAGNOSIS GUIDE

System Condition	Suction Pressure	Suction Line	Compressor Discharge	Condenser	Capillary Tube	Evaporator	Wattage
Normal	Normal	Slightly below room temperature	Very hot	Very hot	Warm	Cold	Normal
Overcharge	Higher than normal	Very cold may frost heavily	Slightly warm to hot	Hot to warm	Cool	Cold	Higher than normal
Undercharge	Lower than normal	Warm-near room temperature	Hot	Warm	Warm	Extremely cold near inlet - Outlet below room temperature	Lower than normal
Partial Restriction	Somewhat lower than normal vacuum	Warm - near room temperature	Very hot	Top passes warm - Lower passes cool (near room temperature) due to liquid	Room temperature (cool) or colder	Extremely cold near inlet - Outlet below room temperature backing up	Lower than normal
Complete Restriction	In deep vacuum	Room temperature (cool)	Room temperature (cool)	Room temperature (cool)	Room temperature (cool)	No refrigeration	Lower than normal
No Gas	0 PSIG to 25"	Room temperature (cool)	Cool to hot	Room temperature (cool)	Room temperature (cool)	No refrigeration	Lower than normal

Compressor Specifications

DANGER

Electrocution can cause death or serious injury. Burns from hot or cold surfaces can cause serious injury. Take precautions when servicing this unit.

Disconnect the power source.

Do not stand in standing water when working around electrical appliances.

Make sure the surfaces you touch are not hot or frozen.

Do not touch a bare circuit board unless you are wearing an anti-static wrist strap that is grounded to an electrical ground or grounded water pipe.

Handle circuit boards carefully and avoid touching components.

To measure the start winding resistance, measure across the C and S pins.

To measure the run winding resistance, measure across the C and R pins.

Also check S to R and you should get the sum of the run and start windings.

To ensure the windings are not shorted, check the S and R to ground.

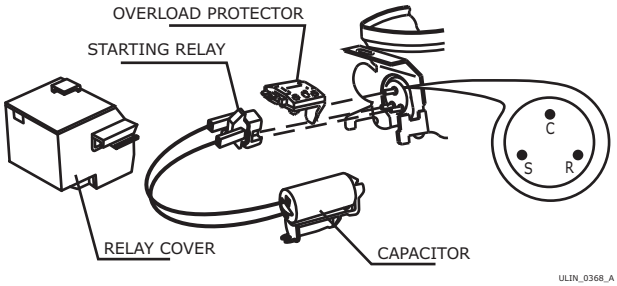

	EMX20CLC
Refrigerant	R600a
Voltage	115 - 127 VAC
Frequency	60 Hz
Run Cap	12μF/165 VAC
Start Winding	6.7 Ohm at 77°F
Run Winding	12.6 Ohm at 77°F
LRA	3.7 A
FLA	0.5 A
Starting Device	8EA14C
Overload	4TM142RFBYY-53

* All resistance readings are ±10%

Troubleshooting - Extended

⚠ CAUTION

Never attempt to repair or perform maintenance on the unit until the main electrical power has been disconnected from the unit.

SPECIFIC ERRORS AND ISSUES

The technically advanced diagnostic capabilities of the electronic controls utilized on the 1200 and 2200 series units allows for easy and thorough troubleshooting.

Navigation of the control is the key and is explained in the CONTROL OPERATION section of the manual, along with control button layout, control function descriptions, a service mode menu and service menu selection explanations.

Verification of temperature and thermistor performance can be identified by directly viewing thermistor readings in the service mode.

Component failure issues can be identified through service mode menu #19, “Component Testing.” Individual components can be switched on and off to check for both proper function of a specific component and also delivery of supply voltage to the components through the relays and DC outputs located on the relay/power board.

Included in this section are some diagnostic tips and of course, if additional help is required please contact the U-Line Corp, “Customer Care Facility” at +1.800.779.2547 for assistance.

NORMAL OPERATING SOUNDS

All models incorporate rigid foam insulated cabinets to provide high thermal efficiency and maximum sound reduction for its internal working components. Despite this technology, your model may make sounds that are unfamiliar.

Normal operating sounds may be more noticeable because of the unit’s environment. Hard surfaces such as cabinets, wood, vinyl or tiled floors and paneled walls have a tendency to reflect normal appliance operating noises.

Listed below are common refrigeration components with a brief description of the normal operating sounds they make. NOTE: Your product may not contain all the components listed.

- Compressor: The compressor makes a hum or pulsing sound that may be heard when it operates.
- Evaporator: Refrigerant flowing through an evaporator may sound like boiling liquid.
- Condenser Fan: Air moving through a condenser may be heard.
- Automatic Defrost Drain Pan: Water may be heard dripping or running into the drain pan when the unit is in the defrost cycle.

Solenoid Valves: An occasional clicking sound may be heard as solenoid valves are operated.

TROUBLESHOOTING GUIDE

Concern	Potential Causes	Suggested Remedy
Not Cooling	Compressor overheating	Verify proper air flow through condenser. Is condenser clean?
		Confirm condenser fan operation.
		Confirm proper compressor operating voltage. Use #19, Component Testing in Service Mode.
	Compressor not operating	Confirm proper compressor operating voltage. Use #19, Component Testing in Service Mode.
		Test overload and relay, replace as needed.
	Compressor operating - no cooling	Refer to System Diagnosis Guide.
	Evaporator fan not operating	Use #19, Component Testing in Service Mode.
Frozen Product	Control set too cold	Adjust Set Point Temp accordingly.
	Review logged error codes	Refer to #14, Error Log in Service Mode.
	Thermistor failure	Check Error Log in Service Mode, OHM thermistor.
Frost Buildup Inside Unit	Door Ajar or Restricted from Closing	Check door clearance to adjoining cabinetry. Check distribution of product in unit.
	Evaporator fan not operating	Use Relay Toggle, Component Testing in Service Mode.
	Thermistor failure	Check Error Log.
Display Not Working	Unit placed in Sabbath mode?	Press and hold for 5 seconds to check.
	Display unplugged	Verify that both ends of the display wiring are firmly connected.
	Display wiring broken or damaged	Perform continuity test of wiring and replace as needed.
Internal Lights Not Working	Control Setting	Unit set to Sabbath Mode. Press and hold for 5 seconds to check.
	Door switch misaligned or defective	Check the function of reed switch and door magnet adjustment.
Noisy	Refrigeration tubing touching cabinet	Carefully reposition tubing.
	Fan blade obstruction (wiring, foam insulation, packaging material)	Remove obstruction.

MAIN CONTROL

The main control board is very robust and is rarely the cause of system issues. It is important to fully diagnose the board for any suspected failures before attempting to remove the board for replacement or service. Follow the guidelines below to fully test and diagnose the main control.

Power Fault

If the unit does not (or seems to not) power on, follow the flow chart below to help diagnose the issue. Before beginning it is important to first verify the unit is not simply set to sabbath mode.

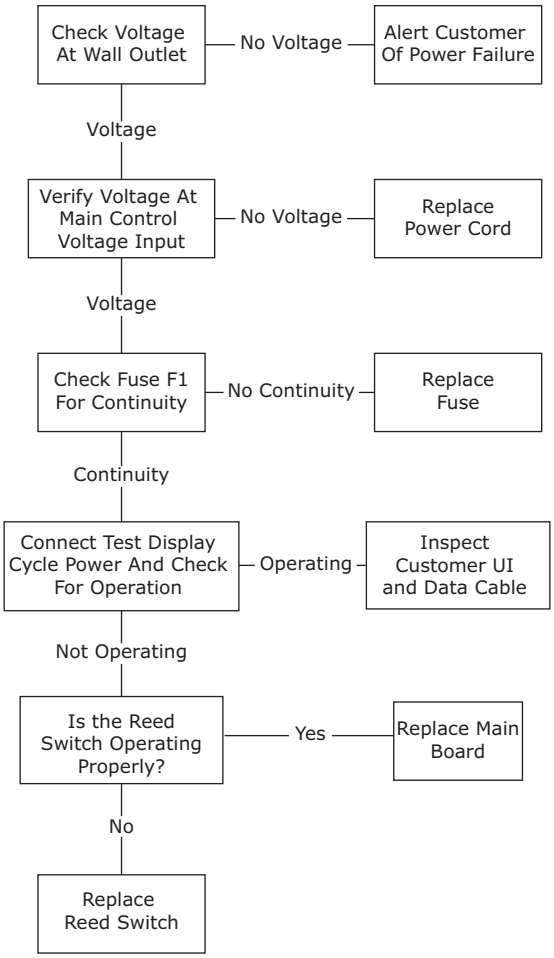

Testing The Main Control

If the main control is suspected of being faulty, the following procedure should be performed to verify main control for functionality.

Relay & DC Outputs

One of the primary functions of the main control is to operate the multiple relay and DC outputs during each cycle. Verify proper operation of these relays using the following procedure.

1. Enter “Relay Toggle” through the service menu.

NOTICE

Frequently toggling the compressor relay could force the compressor into overload. The compressor will automatically deactivate during an overload and will remain deactivated until the overload switch cools. This could take some time. It is important to allow the compressor at least 5 minutes off time between relay cycles.

2. Toggle the relay. Its related component should activate / deactivate with the switching of the relay. If it does not, test component.

Other Suspected Main Control Faults

If other components have been ruled out as being faulty but the unit continues to have operating issues, it is most likely due to a configuration error. Configuration errors can be cleared by restoring the unit to its factory default setting. Factory defaults may be restored through the service menu.

⚠ CAUTION

Precautions must be taken while working with live electrical equipment. Be sure to follow proper safety procedures while performing tests on live systems.

REED SWITCH

A reed switch is used to monitor door state. When the door is closed magnetic force pulls the reed to its contact and closes the circuit which turns the light and display off. When the door is open the reed pulls away from the contact and opens the circuit. If the door is left open for longer than 5 minutes, the switch will trigger an error code and set an audible warning.

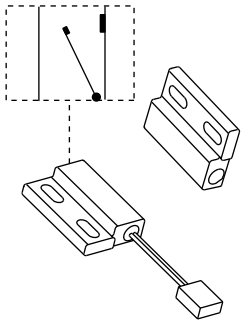

Magnet Away From Switch
(Door Open)
(Switch Open)

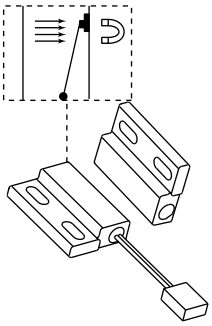

Magnet Close To Switch
(Door Closed)
(Switch Closed)

Control Operation - Service

UI BUTTON LAYOUT

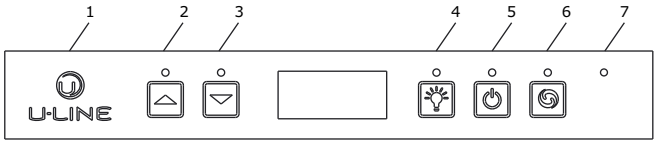

1. **Hidden Button**
   -Accesses Service Menu
   -No LED directly above. All LEDs turn on with button activation except #7.

2. **Up Button**
   -Increases temperature
   -Navigates through service menu
   -LED activated with button activation.

3. **Down Button**
   -Decreases temperature
   -Navigates through service menu
   -LED activated with button activation

4. **Light Button**
   -Activates light for 3 hours on select models
   -Used to select items in service menu
   -LED activated with button activation

5. **Power Button**
   -Turns unit off/on
   -LED activated with button activation (only turning unit off)

6. **Clean Button**
   -Activates Clean Cycle on CLR models
   -LED activated with button activation

7. **LED**
   -No button

CONTROL FUNCTION QUICK GUIDE

FUNCTION	COMMAND	DISPLAY/OPTIONS
ON/OFF	Press ⏻ and release	Unit will immediately turn ON or OFF
Toggle lights	Press 💡 and release to leave interior light on for 3 hours	Glass door wine captains and beverage centers only.
Adjust refrigerator temperature	Push ⌃ or ⌄ and release	When the “F” or “C” in the display is flashing, push ⌃ or ⌄ to adjust the set point temperature.
View temperature in unit	Push ⌃ and ⌄ and release the together	The display will flash and then toggle from set point to temperature in unit.
Toggle between F/C	Hold the ⌃ and ⌄ for five seconds	The display will change units.

DOOR ALERT NOTIFICATION

When the door is left open for more than 5 minutes:

- An audible tone will sound for several seconds every minute.
- “dr” will appear in display.

Close door to silence alert and reset.

VIEWING ACTUAL TEMPERATURE

In viewing temperature in these modes any offsets are taken into account. This means that if you place a thermistor in a known temperature, let’s say ice water, it may not read the 32°F that you would assume. If the control offset was preset at -3°F while you placed the thermistor in an icebath, the actual thermistor reading when viewing actual temperature would read 35°F. In the unit this would cause the cabinet to push itself 3° cooler. To view pure thermistor readings you must go into the service menu and choose the correct option.

To view the thermistor temperature, push and release the up and down keys. The display will show the corrected refrigerator temperature.

SHOWROOM MODE

This mode is designed to show units in a display environment. When in this mode the only functions will be the control and cabinet lights. The compressor, fans, etc. will not operate. To enter/exit this mode hold the light key and the power key for 5 seconds. The display will flash once and beep and the degree symbol will begin to flash.

When the degree symbol is flashing the unit will allow the use of the control for demonstrations. The unit can be left in this mode indefinitely.

SERVICE MODE

This mode has options available for service diagnostics. To enter the mode hold the hidden key for 10 seconds. The display will show “0.” When in this mode use the up and down arrows to select the desired option. The LIGHT key is the ENTER key and will initiate the function. If changing a setting, you must press the LIGHT key again to retain the changed setting. To exit the service mode scroll to option “0” and press the LIGHT key. After five minutes of not touching any keys the mode will also exit automatically.

SERVICE MODE GUIDE

#	Service Mode Menu Item
1	View thermistor #1 (no offsets)
2	View thermistor #2 (no offsets)
3	View thermistor #3 (no offsets)
4	View thermistor #4 (no offsets)
5	Adjust thermistor #1 offset
6	Adjust thermistor #2 offset
7	Adjust thermistor #3 offset
8	Adjust thermistor #4 offset
9	View thermistor #2 set point no offsets
10	View thermistor #3 set point no offsets
11	View thermistor #4 set point no offsets
12	Adjust defrost interval 3 to 24 hours
13	Adjust defrost duration 0 to 99 minutes
14	View error log
15	Clear error log
16	Adjust thermistor #1 differential
17	Adjust evaporator fan delay in minutes (start of cooling cycle) 0 - 99 minutes
18	Adjust evaporator fan delay in minutes (after cooling cycle stops) 0 - 99 minutes
19	Individual component toggle
20	Model number indicator
21	Light all LED segments of display
22	View defrost cycles
23	View compressor run time
24	Activate defrost/harvest
25	Restore factory defaults
26	View software version - main board
27	View software version - user interface
28	Login period
29	Factory test mode
0	Exit service mode

NAVIGATE SERVICE MODE

Use up or down arrows to scroll through the menu.

Use the light bulb key to enter or exit menu. If values have been changed, they will be saved when exiting.

SERVICE MODE GUIDE

1. **THERMISTOR 1 — ZONE**
   This shows the pure thermistor reading with no offsets taken into account.
2. **THERMISTOR 2 — EVAPORATOR**
   This shows the pure thermistor reading with no offsets taken into account.
3. Does not apply to this model.
4. Does not apply to this model.
5. **THERMISTOR 1 — ZONE OFFSET**
   (DO NOT MAKE AN ADJUSTMENT TO THIS WITHOUT CONTACTING TECH LINE: 800-779-2547)

   This calibration is only to be used if actual temperature at thermistor #1 is off from set point.

   By adjusting the offset higher we can force the unit to drive the temperature down below the set point. (example: adjusting from 0 to +2 will drop the unit temperature 2 degrees)
6. **THERMISTOR 2 — EVAPORATOR OFFSET**
   (DO NOT MAKE AN ADJUSTMENT TO THIS WITHOUT CONTACTING TECH LINE: 800-779-2547)
7. Does not apply to this model.
8. Does not apply to this model.
9. **THERMISTOR 2 — SET POINT MINUS OFFSET**
   This shows the thermistor reading with offsets taken into account.
10. Does not apply to this model.
11. Does not apply to this model.
12. **ADJUST DEFROST INTERVAL — 3 TO 24 HOURS**
    This will adjust the interval between defrosts from 3 to 24 hours. Adjusting from the factory settings may cause undesired temperature in the refrigerator section.
13. **ADJUST DEFROST DURATION — 0 TO 99 MINUTES**
    The length of the defrost can be adjusted 0 to 99 minutes long. The other defrost parameters still apply. Lengthening a defrost may cause higher than normal temperatures in the refrigerator section.

14. **VIEW ERROR LOG**
A list of the errors in the order they occurred will scroll once on the display. All errors are logged in memory. Only door error is displayed on the display and has an audible signal.
E0: Door 1 (upper) open.
E1: Thermistor 1 open.
E2: Thermistor 2 open.
E3: Thermistor 3 open.
E4: Thermistor 4 open (Does not apply to this model).
E5: Thermistor 1 shorted.
E6: Thermistor 2 shorted.
E7: Thermistor 3 shorted.
E8: Thermistor 4 shorted (Does not apply to this model).
E9: Door 2 (lower) open.
P1: Pump Circuit open (Does not apply to this model).

15. **CLEAR ERROR LOG**
To clear errors, press and hold (5 seconds) when CLR is flashing.

16. **THERMISTOR — 1 DIFFERENTIAL**
This number should not be adjusted.

17. Does not apply to this model.

18. Does not apply to this model.

19. **INDIVIDUAL COMPONENT TOGGLE**

Display #	Relay/Output
0	Exit
2	Relay 2
3	Relay 3
4	Relay 4
5	Relay 5
6	Relay 6
7	Relay 7
8	DC Output 1
9	DC Output 2
10	DC Output 3
11	DC Output 4
12	DC Output 5

SEE RELAY/OUTPUT CHART

20. **MODEL NUMBER INDICATOR**
Displays the two-digit model number of the specific unit. See model list table.

21. **LIGHT ALL LED SEGMENTS**
This will illuminate all the LEDs on the display to ensure they work properly.

22. **VIEW DEFROST CYCLES**
Displays the number of defrosts that have occurred in the past 24 hours.

23. **VIEW COMPRESSOR RUNTIME**
This will show the number of minutes the compressor has run in the prior cycle (or current cycle if the compressor was running when service mode was entered).

24. **ACTIVATE DEFROST/HARVEST**
Turns on the hot gas bypass valve allowing hot gas to circulate through the evaporator causing frost to melt.

25. **RESTORE FACTORY DEFAULTS**
Will restore all adjustable functions to their factory settings.

26. **SOFTWARE VERSION — MAIN BOARD**
Displays software version of the main control board.

27. **SOFTWARE VERSION — USER INTERFACE**
Displays software version of the user interface.

28. **LOG IN PERIOD**
Factory use only - do not adjust.

29. **FACTORY TEST MODE**
Should be 0.

0. **EXIT SERVICE MODE**

MODEL LIST

1000	MODEL INDICATOR		2000 (120V)	MODEL INDICATOR		2000 (230V)	MODEL INDICATOR
1215R	07		2218R	05		2245R	55
1215WC	12		2218RGL	04		2245DC	54
1224BEV	13		2218WC	06		2245WC	56
1224DWR	08		2224BEV	00		2260DC	50
1224R	14		2224FZR	11		2260FZR	57
1224RF	09		2224R	02		2260R	52
1224RSOD	10		2224RGL	01		2260RDC	51
1224WC	15		2224WC	03		2260WC	53
CLR1215	18		2224ZWC	59		2260ZWC	58
CO1224F	19		ADA24R	17			

PROGRAMMING THE UNIT TO CORRECT MODEL NUMBER

1. Disconnect the unit from power source.
2. Push and hold the U-Line button.
3. While still holding the U-Line button, plug the unit into the appropriate power source.
4. When the flashing digits appear (3-5 seconds), use the up and down arrow buttons to select the appropriate model number*. or

*(See Above “Model List”)

5. Press the light bulb button once.
6. The display will blink, and then will appear as the programmed display.

Relay / Output Chart

Name	Relay 2	Relay 3	Relay 4	Relay 5	Relay 6	Relay 7	DC Output 1	DC Output 2	DC Output 3	DC Output 4	DC Output 5
1215R	N/A	N/A	N/A	N/A	N/A	Compressor	Light	Evaporator Fan	Condenser Fan	N/A	N/A
1215WC	N/A	N/A	N/A	N/A	N/A	Compressor	Light	Evaporator Fan	Condenser Fan	N/A	N/A
124BEV	N/A	N/A	N/A	N/A	N/A	Compressor	Light	Evaporator Fan	Condenser Fan	N/A	N/A
1224DWR	Mullion Heater	N/A	N/A	N/A	N/A	Compressor	Top Light	Evaporator Fan	Condenser Fan	N/A	Bottom Light
1224R	N/A	N/A	N/A	N/A	N/A	Compressor	Light	Evaporator Fan	Condenser Fan	N/A	N/A
1224RF	N/A	N/A	Pan Heater	Hot Gas Valve	N/A	Compressor	Light	Evaporator Fan	Condenser Fan	N/A	N/A
1224RSOD	N/A	N/A	N/A	N/A	N/A	Compressor	Light	Evaporator Fan	Condenser Fan	N/A	N/A
1224WC	N/A	N/A	N/A	N/A	N/A	Compressor	Light	Evaporator Fan	Condenser Fan	N/A	N/A
ADA24R	N/A	N/A	N/A	N/A	N/A	Compressor	Light	Evaporator Fan	Condenser Fan	N/A	N/A
CLR1215	N/A	Pump	Water Valve	Hot Gas Valve	Condenser Fan	Compressor	Light	N/A	N/A	N/A	N/A
CO1224F	Ice Maker 2	Ice Maker 1	Pan Heater	Hot Gas Valve	N/A	Compressor	Light	Evaporator Fan	Condenser Fan	N/A	N/A
2218R	N/A	N/A	N/A	N/A	N/A	Compressor	Light	Evaporator Fan	Condenser Fan	N/A	N/A
2218RGL	N/A	N/A	N/A	N/A	N/A	Compressor	Light	Evaporator Fan	Condenser Fan	N/A	N/A
2218WC	N/A	N/A	N/A	N/A	N/A	Compressor	Light	Evaporator Fan	Condenser Fan	N/A	N/A
2224BEV	N/A	N/A	N/A	N/A	N/A	Compressor	Light	Evaporator Fan	Condenser Fan	N/A	N/A
2224R	N/A	N/A	N/A	N/A	N/A	Compressor	Light	Evaporator Fan	Condenser Fan	N/A	N/A
2224RGL	N/A	N/A	N/A	N/A	N/A	Compressor	Light	Evaporator Fan	Condenser Fan	N/A	N/A
2224WC	N/A	N/A	N/A	N/A	N/A	Compressor	Light	Evaporator Fan	Condenser Fan	N/A	N/A
2224ZWC	N/A	N/A	vl2	vl1	N/A	Compressor	Top Light	N/A	Condenser Fan	N/A	Bottom Light
2245R	N/A	Hot Gas Valve	N/A	N/A	N/A	Compressor	Light	Evaporator Fan	Condenser Fan	N/A	N/A
2245RDC	N/A	Hot Gas Valve	N/A	N/A	N/A	Compressor	Light	Evaporator Fan	Condenser Fan	N/A	N/A
2245WC	N/A	Hot Gas Valve	N/A	N/A	N/A	Compressor	Light	Evaporator Fan	Condenser Fan	N/A	N/A
2260DC	N/A	N/A	N/A	N/A	N/A	Compressor	Light	Evaporator Fan	Condenser Fan	N/A	N/A
2260R	N/A	N/A	N/A	N/A	N/A	Compressor	Light	Evaporator Fan	Condenser Fan	N/A	N/A
2260RDC	N/A	N/A	N/A	N/A	N/A	Compressor	Light	Evaporator Fan	Condenser Fan	N/A	N/A
2260WC	N/A	N/A	N/A	N/A	N/A	Compressor	Light	Evaporator Fan	Condenser Fan	N/A	N/A
2260ZWC	N/A	N/A	vl2	vl1	N/A	Compressor	Top Light	N/A	Condenser Fan	N/A	Bottom Light

Thermistors

Thermistors are used for various temperature readings. Thermistors provide reliable temperature readings using a resistance which varies based on surrounding temperatures. If a faulty thermistor is suspected it may be tested using an accurate ohmmeter.

Both thermistors in the unit are identical. If a thermistor is suspected of being defective, the resistance can be verified. Place the thermistor in an ice water bath, the resistance should read 16.1k OHMs +/-5% on your meter.

Thermistor connections must be kept clean. A thermistor connection that has become corroded can cause resistance values from the thermistor to change as they pass through a dirty connection to the board.

It is for that reason that we apply dielectric grease to all of our thermistor connections. Dielectric grease will help to keep thermistor connections clean and dry.

If you change a thermistor in the unit please re-apply dielectric grease to the connection. If you encounter a dirty thermistor connection, you should replace the thermistor and the thermistor harness.

Thermistor error information can be found in the Control Operations - Service section.

This unit has **two** thermistors.

Thermistor one (Zone):

Located along the right hand side wall. It is used to maintain the operating temperature within that zone.

Thermistor two (Evaporator):

Located on the evaporator. It is used for defrost.

THERMISTOR FAILURE

Zone Thermistor

If the zone thermistor in the unit fails, the unit will continue to cool in a backup mode (Self Preservation Mode) to preserve the integrity of the contents. The unit will otherwise operate normally.

1000 Series Self Preservation Mode:
The unit will cycle on for 10 minutes then off for 40 minutes.

Evaporator Thermistor

If the evaporator thermistor fails, the unit will rely on a preset defrost timer during defrost cycles. The unit will otherwise operate normally. Refer to defrost section.

Thermistor Resistance Data

Temp (F)	Temp (C)	Nominal Resistance (OHMS)*
-40	-40	169157
-31	-35	121795
-22	-30	88766
-13	-25	65333
-4	-20	48614
5	-15	36503
14	-10	27681
23	-5	21166
32	0	16330
41	5	12696
50	10	9951
59	15	7855
68	20	6246
77	25	5000
86	30	4029
95	35	3266
104	40	2665
113	45	2186
122	50	1803
131	55	1495
140	60	1247
149	65	1044
158	70	879
167	75	743
176	80	631

* (+/-5%)

Defrost

The models below have automatic or frost free design and do not require manual defrosting under normal conditions.

Defrost Settings				
Base Model	**Variant(s)**	**Compressor Run Time Between Defrost (Hours)**	**Duration in Minutes (Maximum)**	**Stop Temperature °F (°C)**
1224	RF	12	45	15 (-9)
1215/1224/2218/2245/ 2224/2260	WC, ZWC	12	45	45 (7)
1215/1224/2218/2245/ 2224/2260	R, RSOD, RDC, BEV, DC, DWR, RGL	12	45	42 (6)
CO29	F	12	18	n/a
CO1224	F	12	18	45 (7)
1224FZR	Freezer Mode	6	45	42(6)
1224FZR	Refrigerator Mode	12	45	42(6)

The defrost settings for 3000 series models are determined by zone.

Defrost Settings by Zone (3000 Series)				
Zones	**Compressor Run Time Between Defrost (Hours)**	**Duration in Minutes (Minimum)**	**Duration in Minutes (Maximum)**	**Stop Temperature °F (°C)**
Beverage/Drinks	12	5	60	42 (6)
Market/Fresh	12	5	60	42 (6)
Root/Root Cellar	12	5	60	45 (7)
Pantry	12	5	60	42 (6)
White Wine	12	5	60	45 (7)
Red Wine	12	5	60	45 (7)
Sparkling Wine	12	5	60	45 (7)
Polar	6	5	20	42 (6)
Deli	12	5	60	42 (6)