# USER GUIDE & SERVICE MANUAL

SAFETY • INSTALLATION & INTEGRATION • OPERATING INSTRUCTIONS • MAINTENANCE • SERVICE

Modular 3000 Series • 3024FZR • 24" Freezer

**Tip:** Click on any section below to jump directly there

## Contents

Intro

### Safety

Safety and Warning

Disposal and Recycling

### Installation

Environmental Requirements

Electrical

Cutout Dimensions

Product Dimensions

Side by Side Installation

Anti-Tip Bracket

General Installation

Integrated Panel Dimensions

Integrated Grille / Plinth Dimensions

Integrated Panel Installation

Grille / Plinth Installation

Door Swing

Door Stop

Door Adjust

### Operating Instructions

First Use

Control Operation

Sabbath Mode

Airflow and Product Loading

Freezer Bins

### Maintenance

Cleaning

Cleaning Condenser

Extended Non-Use

### Service

Troubleshooting

Warranty

### Service Extended

Wire Diagram

Product Liability

Warranty Claims

Parts

Ordering Replacement Parts

System Diagnosis Guide

Compressor Specifications

Troubleshooting Extended

Control Quick Guide

Thermistor

Defrost

Remove Fan and Cover

## WELCOME TO U-LINE

Congratulations on your U-Line purchase. Your product comes from a company with over five decades of premium modular ice making, refrigeration, and wine preservation experience. U-Line continues to be the American leader, delivering versatility and flexibility for multiple applications including residential, light commercial, outdoor and marine use. U-Line's complete product collection includes Wine Captain® Models, Beverage Centers, Clear Ice Machines, Crescent Ice Makers, Glass & Solid Door Refrigerators, Drawer Models, Freezers, Combo® Models, and more.

U-Line has captivated those with an appreciation for the finer things with exceptional functionality, style, inspired innovations and attention to even the smallest details. We are known and respected for our unwavering dedication to product design, quality and selection. U-Line is headquartered in Milwaukee, Wisconsin and has shipped product to five continents for over two decades and is proud to have the opportunity to ship to you.

## PRODUCT INFORMATION

Looking for additional information on your product? User Guides, Spec Sheets, CAD Drawings, Compliance Documentation, and Product Warranty information are all available for reference and download at u-line.com.

## PROPERTY DAMAGE / INJURY CONCERNS

In the unlikely event property damage or personal injury is suspected related to a U-Line product, please take the following steps:

1. U-Line Customer Care must be contacted immediately at +1.800.779.2547.
2. Service or repairs performed on the unit without prior written approval from U-Line is not permitted. If the unit has been altered or repaired in the field without prior written approval from U-Line, claims will not be eligible.

**GENERAL INQUIRIES**

U-Line Corporation
8900 N. 55th Street
Milwaukee, Wisconsin 53223 USA
Monday - Friday 8:00 am to 4:30 pm CST
T: +1.414.354.0300
F: +1.414.354.7905
Email: sales@u-line.com
u-line.com

**SERVICE & PARTS ASSISTANCE**

Monday - Friday 8:00 am to 4:30 pm CST
T: +1.800.779.2547
F: +1.414.354.5696
Service Email: onlineservice@u-line.com
Parts Email: onlineparts@u-line.com

**CONNECT WITH US**

blog

Designed, engineered and assembled in WI, USA

# Safety and Warning

**NOTICE**

**Please read all instructions before installing, operating, or servicing the appliance.**

Use this appliance for its intended purpose only and follow these general precautions with those listed throughout this guide:

**SAFETY ALERT DEFINITIONS**

Throughout this guide are safety items labeled with a Danger, Warning or Caution based on the risk type:

**⚠ DANGER**

**Danger means that failure to follow this safety statement will result in severe personal injury or death.**

**⚠ WARNING**

**Warning means that failure to follow this safety statement could result in serious personal injury or death.**

**⚠ CAUTION**

**Caution means that failure to follow this safety statement may result in minor or moderate personal injury, property or equipment damage.**

# Disposal and Recycling

**⚠ DANGER**

**RISK OF CHILD ENTRAPMENT. Before you throw away your old refrigerator or freezer, take off the doors and leave shelves in place so children may not easily climb inside.**

If the unit is being removed from service for disposal, check and obey all federal, state and local regulations regarding the disposal and recycling of refrigeration appliances, and follow these steps completely:

1. Remove all consumable contents from the unit.

2. Unplug the electrical cord from its socket.

3. Remove the door(s)/drawer(s).

# Environmental Requirements

This model is intended for indoor/interior applications only and is not to be used in installations that are open/ exposed to natural elements.

This unit is designed to operate between 50°F (10°C) and 100°F (38°C). Higher ambient temperatures may reduce the unit's ability to reach low temperatures and/or reduce ice production on applicable models.

For best performance, keep the unit out of direct sunlight and away from heat generating equipment.

In climates where high humidity and dew points are present, condensation may appear on outside surfaces. This is considered normal. The condensation will evaporate when the humidity drops.

**⚠ CAUTION**

**Damages caused by ambient temperatures of 40°F (4°C) or below are not covered by the warranty.**

# Electrical

**⚠ WARNING**

**SHOCK HAZARD — Electrical Grounding Required. Never attempt to repair or perform maintenance on the unit until the electricity has been disconnected.**

**Never remove the round grounding prong from the plug and never use a two-prong grounding adapter.**

**Altering, cutting or removing power cord, removing power plug, or direct wiring can cause serious injury, fire, loss of property and/or life, and will void the warranty.**

**Never use an extension cord to connect power to the unit.**

**Always keep your working area dry.**

**NOTICE**

**Electrical installation must observe all state and local codes. This unit requires connection to a grounded (three-prong), polarized receptacle that has been placed by a qualified electrician.**

The unit requires a grounded and polarized 115 VAC, 60 Hz, 15A power supply (normal household current). An individual, properly grounded branch circuit or circuit breaker is recommended. A GFCI (ground fault circuit interrupter) is usually not required for fixed location appliances and is not recommended for your unit because it could be prone to nuisance tripping. However, be sure to consult your local codes.

See CUTOUT DIMENSIONS for recommended receptacle location.

# Cutout Dimensions

### PREPARE SITE

Your U-Line product has been designed exclusively for a built-in installation. When built-in, your unit does not require additional air space for top, sides, or rear. However, the front grille must NOT be obstructed.

The product is designed and manufactured for seamless integration in the specified cutout opening shown, which requires precise measurements. The opening must be square and plumb front to back. Although not required, you may choose to increase the overall cutout width for ease of installation.

The Modular 3000 Series units are engineered with a variety of adjustment features to help ensure a seamless installation. Adjustable doors, leveling legs and grille will assist in fine tuning the installation.

All 3000 Series models fully integrate into overlay/face frame, inset or European/frameless cabinet styles and install seamlessly into standard 24" (610 mm) depth cabinet base.

**⚠ CAUTION**

**Unit can NOT be installed behind a closed cabinet door.**

### CUTOUT DIMENSIONS

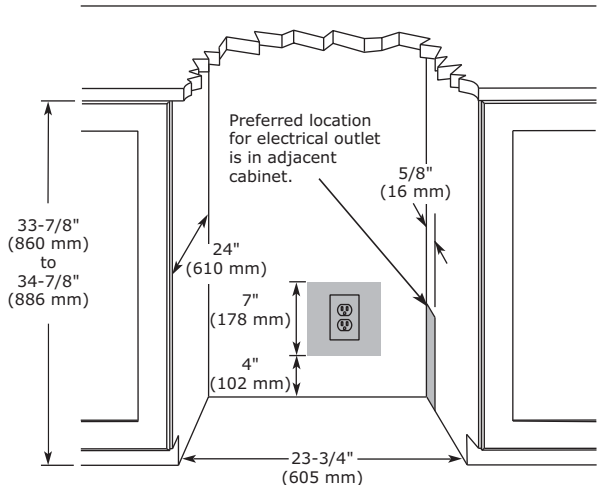


Metric measurements rounded and optimized.

## Product Dimensions

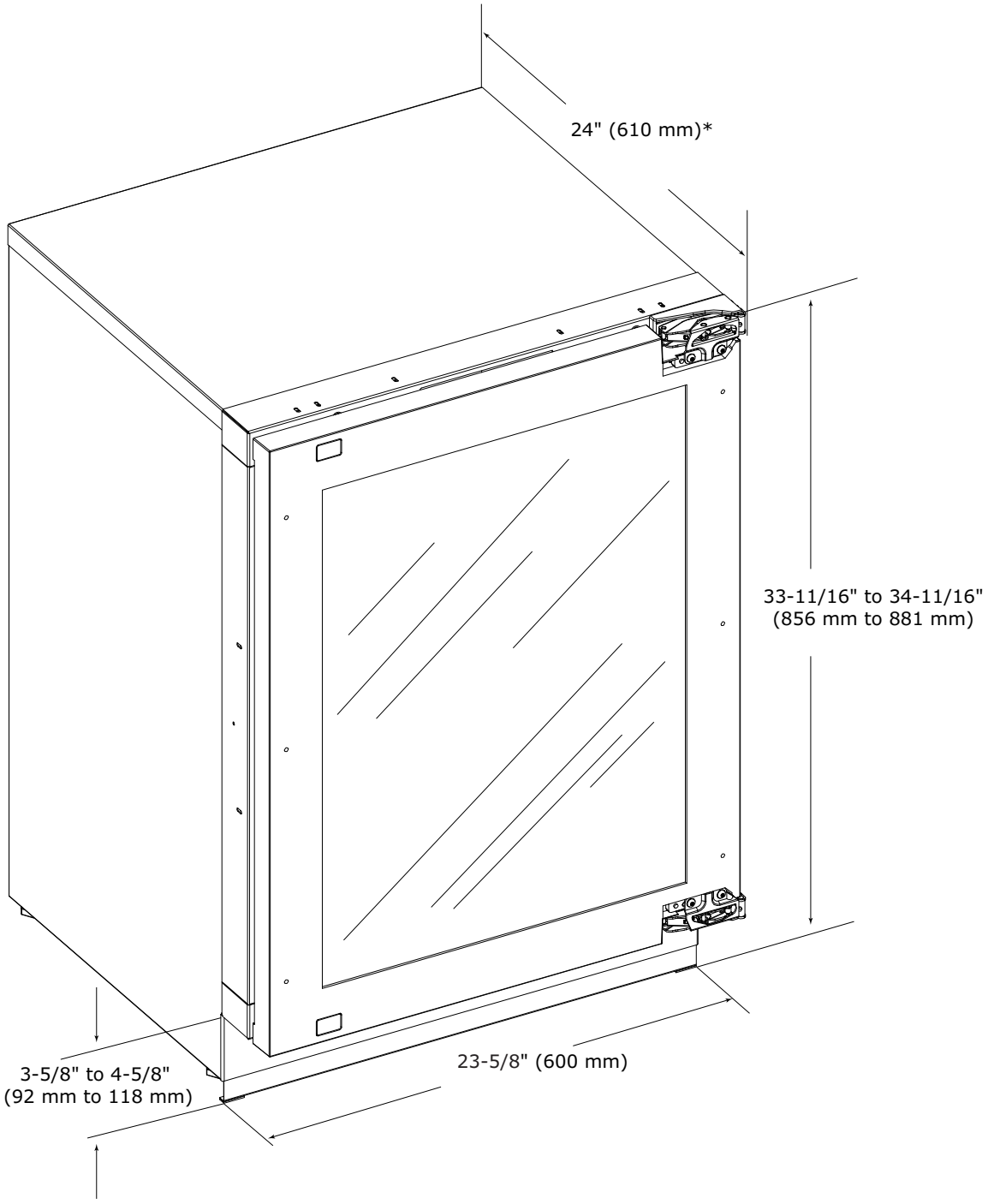


*Includes 3/4" (20 mm) integrated panel

# Side-by-Side Installation

## OTHER SITE REQUIREMENTS

### Side-by-Side Installation

Units must operate from separate, properly grounded electrical receptacles placed according to each unit's electrical specifications requirements.

Cutout width for a side-by-side installation is the total of the widths listed under Cutout Dimensions in each unit's Installation Guide. Each door can be opened individually (one at a time) without interference.

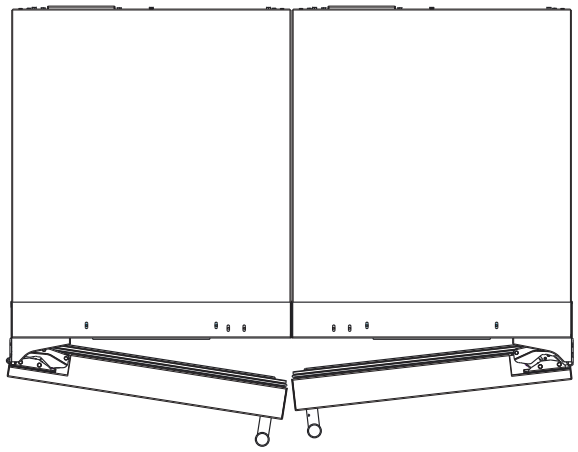

However, to ensure unobstructed door swing (opening both doors at the same time), 1/4" (6.4 mm) of space needs to be maintained between the units.

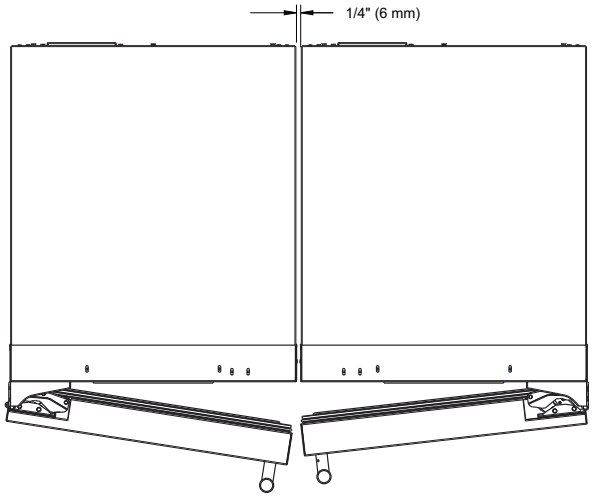


### Hinge-by-Hinge Installation (Mullion)

When installing two units hinge-by-hinge, 13/16" (22 mm) is required for integrated models. Additional space may be needed for any knobs, pulls or handles installed.

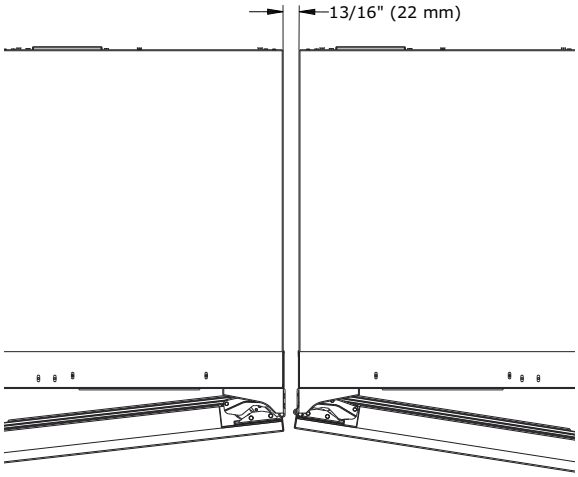


Stainless steel models which include the standard stainless handle will require 4-9/16" (116 mm) to allow both doors to open to 90° at the same time.

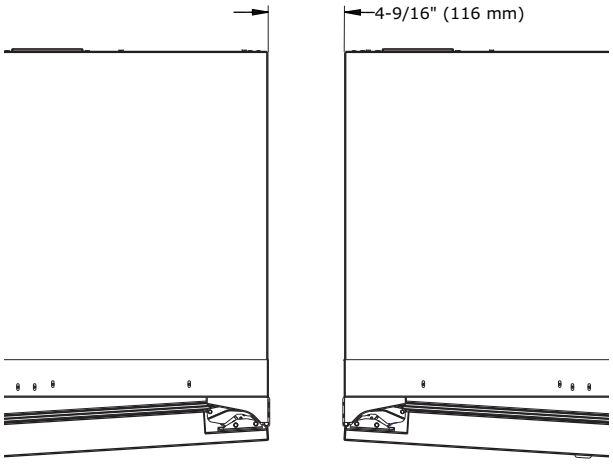

# Anti-Tip Bracket

**⚠ CAUTION**

**The anti-tip bracket must be installed to prevent the unit from tipping when doors are fully opened or excess weight is placed on the front of the unit.**

The anti-tip bracket has multiple mounting options. Mounting will depend on your particular cabinet configuration. Locate 3 #8x5/8" screws included with your unit.

### TOP MOUNT

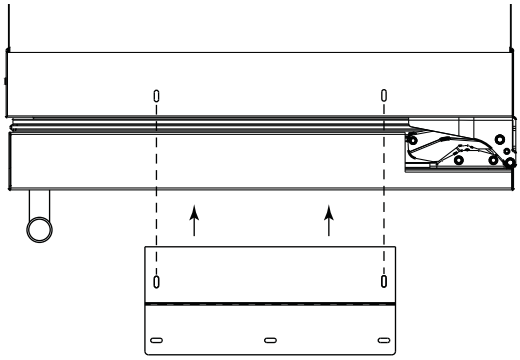

For ease of installation, the anti-tip bracket is pre-installed in the top mount position.

1. Completely slide the unit into its position in the cabinet. Be certain unit height is properly adjusted. (See GENERAL INSTALLATION).

2. Open door completely. Make certain door clears surrounding cabinetry.

3. Using a 3/32" (2.50 mm) drill bit, drill 3 pilot holes 5/8" (16 mm) deep into bottom of counter top. Use the anti-tip bracket as a template.

4. Install 3 #8x5/8" screws into the plate using a #2 Phillips head screwdriver.

### SIDE MOUNT

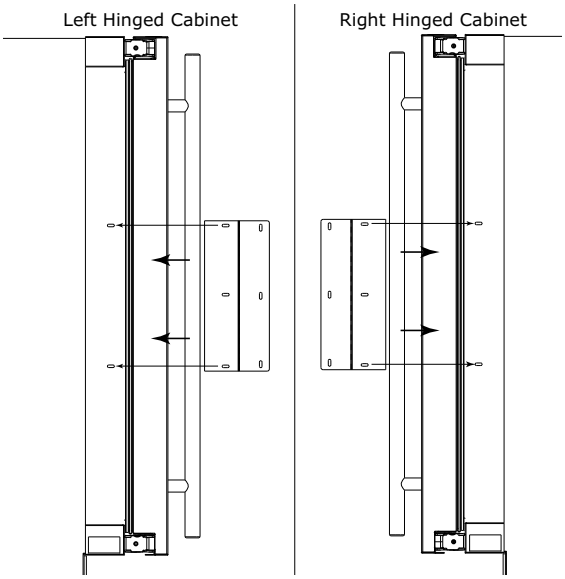


Side mount position is used when you are unable to mount the bracket to the underside of your countertop.

1. Remove the pre-installed anti-tip bracket from the top mount position and align the bracket to the hinge side of the unit as shown above.

2. Reinstall the 2 #8x5/8" screws into the plate using a #2 Phillips head screwdriver.

3. Completely slide the unit into its position in the cabinet. Be certain unit height is properly adjusted. (See GENERAL INSTALLATION).

4. Open door completely. Make certain door clears surrounding cabinetry.

5. Using a 3/32" (2.50 mm) drill bit, drill 3 pilot holes 5/8" (16 mm) deep into cabinetry frame using the anti-tip bracket as a template.

6. Install 3 #8x5/8" screws into the plate using a #2 Phillips head screwdriver.

# General Installation

### LEVELING INFORMATION

1. Use a level to confirm the unit is level. Level should be placed along top edge and side edge as shown.

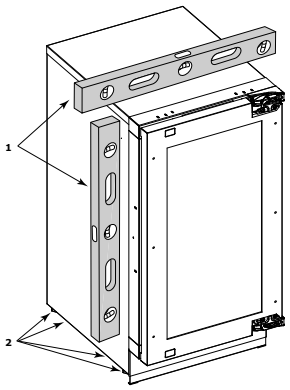


2. If the unit is not level, remove grille and adjust legs as necessary. Use included tool to adjust the height of the rear legs.

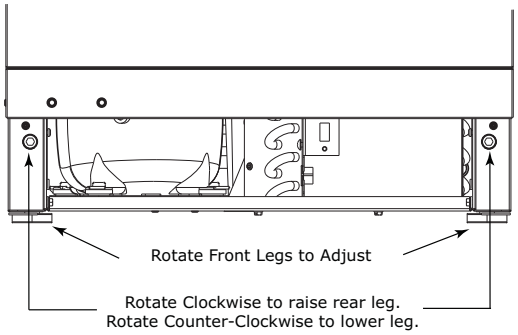


3. Confirm the unit is level after each adjustment and repeat the previous steps until the unit is level.

### INSTALLATION TIP

If the room floor is higher than the floor in the cutout opening, adjust the rear legs to achieve a total unit rear height of 1/8" (3 mm) less than the opening's rear height. Shorten the unit height in the front by adjusting the front legs. This allows the unit to be gently tipped into the opening. Adjust the front legs to level the unit after it is correctly positioned in the opening.

### INSTALLATION

1. Plug in the power/electrical cord.

2. Gently push the unit into position. Be careful not to entangle the cord.

3. Re-check the leveling, from front to back and side to side. Make any necessary adjustments. The unit's top surface should be approximately 1/8" (3 mm) below the countertop.

4. Install the anti-tip bracket.

5. Remove the interior packing material and wipe out the inside of the unit with a clean, water-dampened cloth.

# Integrated Panel Dimensions

Metric measurements rounded and optimized.

**INTEGRATED PANEL**

**NOTICE**

**Due to differences in surrounding cabinetry the panel may not perfectly align with door. The procedure below is designed to provide a finished integrated panel that seamlessly integrates with surrounding cabinetry.**

### Panel Preparation

A full integrated door panel completely covers the door frame and provides a built-in appearance.

**NOTICE**

**The door panel must not weigh more than 20 lbs (10 kg).**

**It is important to ensure that all drilled holes are drilled to the correct depth in order to avoid splits in the wood when hardware is installed.**

1. Cut the panels to the dimensions listed in the appropriate diagram below.

2. Optional: Stain or finish panel to desired stain or color. Be sure to closely follow the instructions provided by the manufacturer.

3. Optional: Install handles and hardware.

**NOTICE**

**When applying an integrated panel to a unit, ensure that both sides are finished in order to prevent warping. In some overlay panel/frame installations, the panel may be visible through the glass while the door is open.**

**Integrated Panel Dimensions**

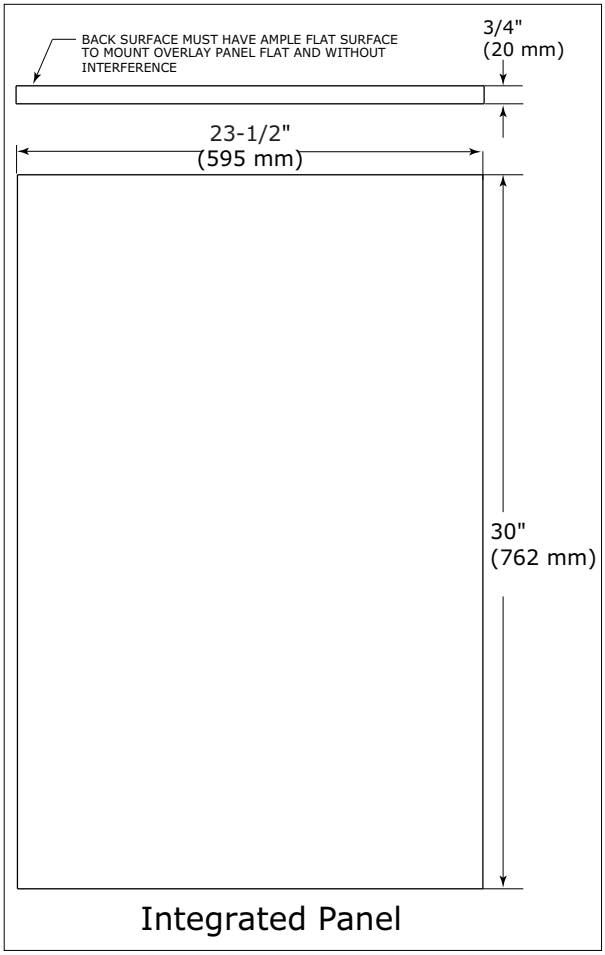


Integrated Panel

**HANDLELESS INTEGRATED DOOR PANEL**

The following procedure is designed to provide a finished, handleless solid panel for a 24" (600 mm) door that seamlessly integrates with its surrounding cabinetry.

NOTE: Many cabinet manufacturers provide a ready solution for a handleless, integrated design that can be easily applied to your U-Line 3000 Series model. Consult your cabinet manufacturer for applicable design and installation details. The cabinet manufacturer's solution to this design and integration detail will often result in an integrated panel solution wherein the size of the panel may result in a height dimension taller than what we specify. This can be achieved provided the additional height is positioned above the appliance door.

**NOTICE**

**The integrated panel aligns with the surrounding cabinetry and, due to differences in cabinetry, may not align perfectly with the door.**

**The appliance will need up to 34-1/2" (876 mm) to the underside of the counter to leave room for leveling adjustments.**

**A single prepared overlay with insert must not weigh more than 20 lbs (10 kg).**

**Integrated Panel Preparation**

1. Cut the main panel to the appropriate dimensions below. For details, see the drawings on the next page.

| Main panel width | Main panel height |
|---|---|
| 23-1/2" (595 mm) | 28-13/16" (732 mm) |

2. Create the top design for the handleless feature and the 1/8" (3 mm) notch for the insert(s) indicated on the Top Detail drawing.

3. Prepare the insert(s) that will back up the handleless design. **Wooden Insert –** Cut 1/8" (3 mm) thick wooden insert(s) to the dimensions below.

| Wooden insert width | Wooden insert height |
|---|---|
| 23-1/2" (595 mm) | 3-1/2" (89 mm) |

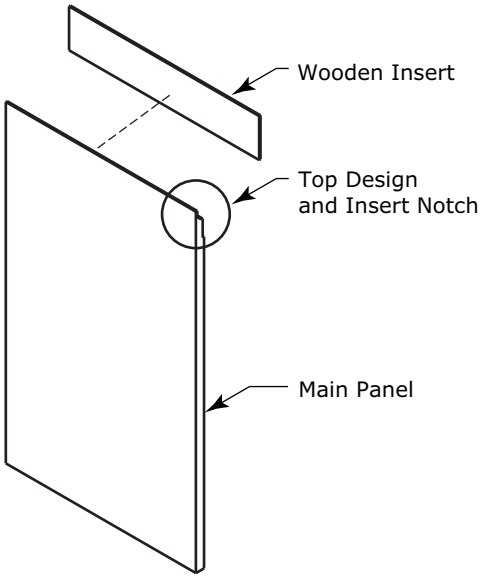


Integrated Panel

4. Optional: Stain or finish panel and wooden insert to desired stain or color. Be sure to closely follow the instructions provided by the manufacturer.

**NOTICE**

**If finishing panel or wooden insert, all sides must be finished to prevent warping.**

5. Attach the insert to the panel. Wood glue or equivalent adhesive should be used to attach insert to panel.

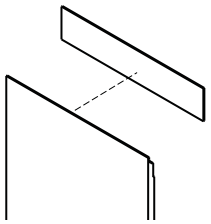

**Attach Wooden Insert**

**Handleless Integrated Panel Dimensions**

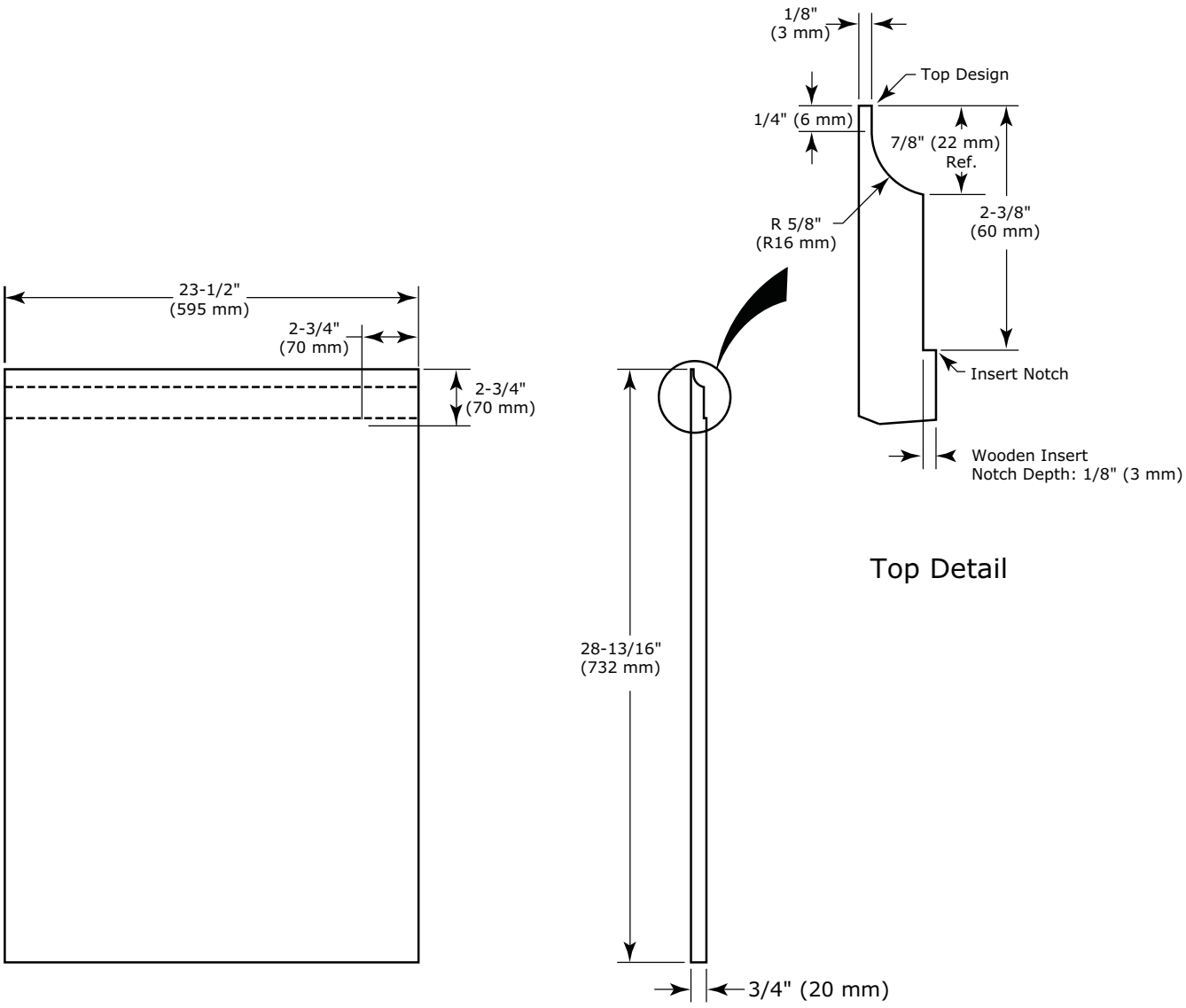


Top Detail

Wooden Insert Dimensions

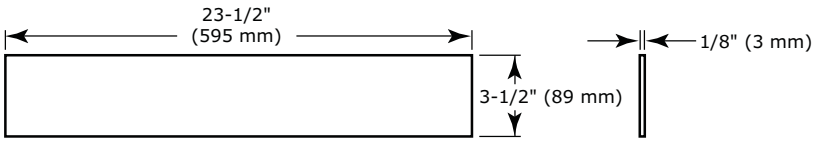

**EXTENDED INTEGRATED PANEL**

**NOTICE**

**Due to differences in surrounding cabinetry the panel may not perfectly align with door. The procedure below is designed to provide a finished panel that seamlessly integrates with surrounding cabinetry.**

**Panel Preparation**

An extended integrated panel can be used to maintain alignment with an adjacent extended cabinet height or a reduced toe-kick/grille application.

1. Cut the panels to the dimensions listed in the appropriate diagram on the next page.

2. Optional: Stain or finish panel to desired stain or color. Be sure to closely follow the instructions provided by the manufacturer.

3. Optional: Install handles and hardware.

**NOTICE**

**The door panel must not weigh more than 20 lbs (10 kg).**

**It is important to ensure that all drilled holes are drilled to the correct depth in order to avoid splits in the wood when hardware is installed.**

**Appliance will need up to 34-1/2" (876 mm) to the underside of the counter to leave room for leveling adjustments.**

**When applying an integrated panel to a unit, ensure that both sides are finished in order to prevent warping. In some installations, the panel may be visible through the glass while the door is open.**

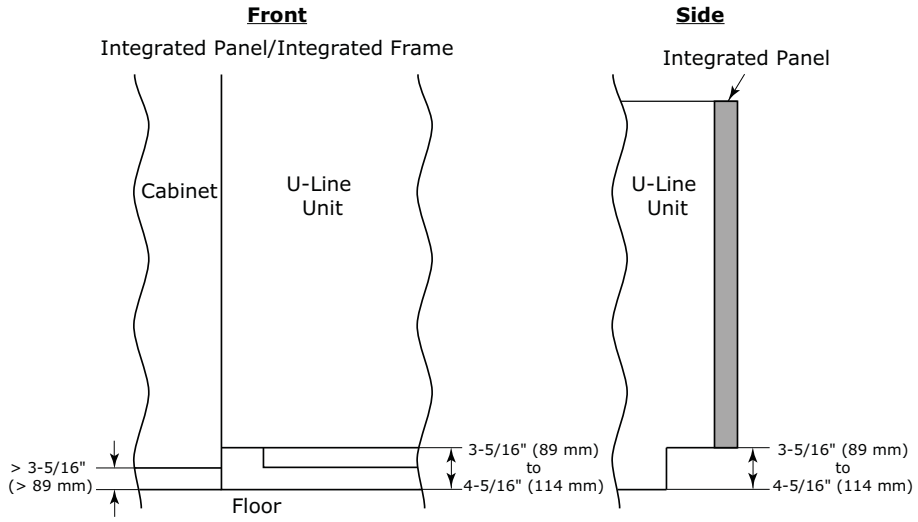


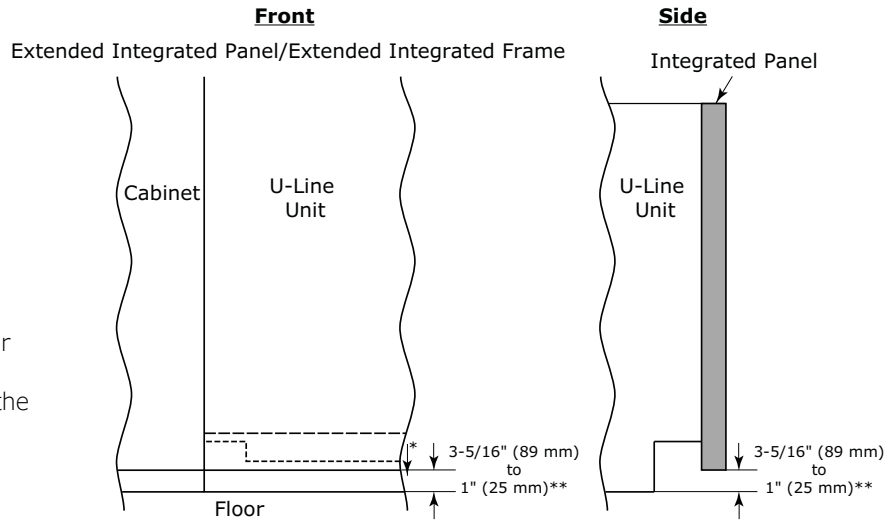


* Panel can extend beyond the door frame.

** A minimum of 1" (25 mm) from the floor is required for proper ventilation.

**Extended Integrated Panel Dimensions**

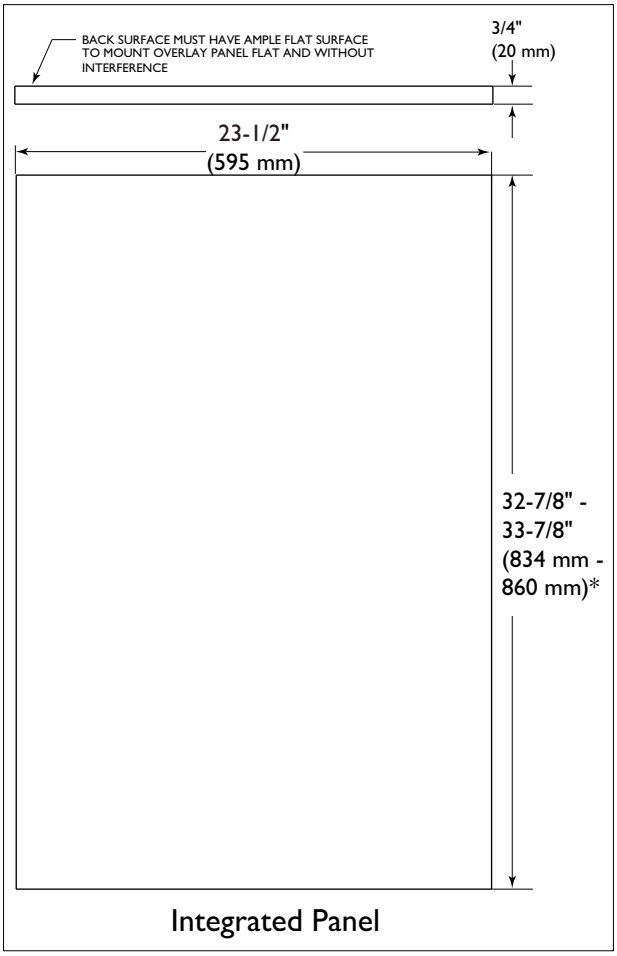


* A minimum of 1" (25 mm) is required from the floor to the bottom of the extended integrated panel/frame for proper ventilation.

# Integrated Grille - Plinth Dimensions

### PREPARE AND INSTALL INTEGRATED GRILLE (PLINTH STRIP/BASE FASCIA)

1. Use the dimensions provided in the diagram to cut and shape your integrated grille (plinth strip/base fascia) panel. Recommended panel thickness is between 1/4" (6 mm) and 3/8" (9 mm). Height will vary from 3-5/16" (84 mm) to 4-5/16" (110 mm) based on your grille (plinth strip/base fascia) height.

2. Finish or stain your grille (plinth strip/base fascia) panel to match your surrounding furniture. Finish front, back and edges to prevent warping. Carefully follow the manufacturer's recommendations for finish application and cure times.

3. Apply double sided tape to the backside of the integrated grill (plinth strip/base fascia). Use the diagram below for reference. U-Line recommends 3M™ VHB™ tape, a high strength bonding tape.

Apply Tape To Shaded Area

4. Remove backing paper from double sided tape.

5. Carefully align grille (plinth strip/base fascia) over integrated panel and press into position.

### INTEGRATED GRILLE (PLINTH STRIP/BASE FASCIA) DIMENSIONS

# Integrated Panel Installation

1. Fully open door.

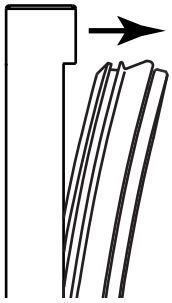

2. Starting at corner, pull gasket away from door.

3. Continue to pull gasket free from gasket channel.

4. Upon removal, lay gasket down on a flat surface.

5. Align top of panel with top edge of door. Center panel on door. (For 3036/3090 models, align panel on the hinge side-edge of door.)

**NOTICE**

**Due to differences in floor construction or surrounding cabinetry, the panel may not sit flush with the top of the door.**

6. Secure integrated panel to door using clamps. A robust tape may also be used. U-Line recommends the use of bar clamps to secure the panel to the door. If using tape, be certain the tape will not damage panel finish upon removal.

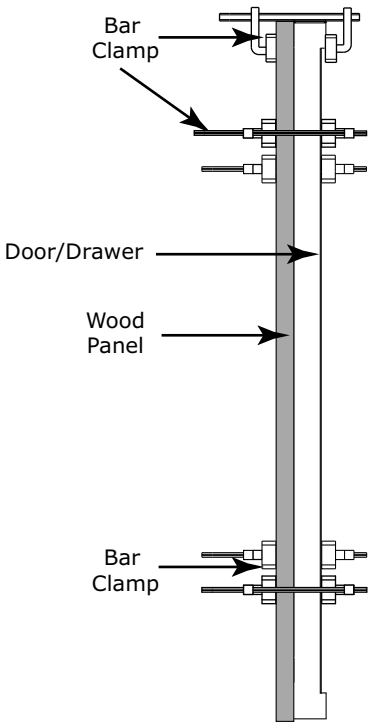


7. Using a 7/64" (3 mm) drill bit, drill 6 pilot holes into the wood panel 1/2" (12 mm) deep using the holes in the door frame as a guide.

**NOTICE**

**It is important to ensure that all drilled holes are drilled to the correct depth in order to avoid splits in the wood when hardwood is installed.**

8. Locate 6 of the #6x 1-1/2" (38 mm) screws provided with your unit.

9. Using a Phillips screwdriver, place one screw into each of the 6 pilot holes and screw down. Do not overtighten screws.

10. Ensure the screws sit flush against the bottom of the channel.

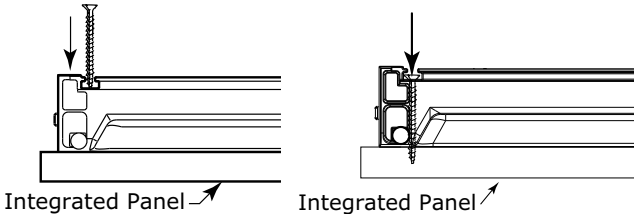


11. Remove clamps from door.

**NOTICE**

**If panel requires additional adjustment after removing clamps, slightly loosen each screw and adjust panel as necessary. Tighten screws upon completion.**

12. Starting at the corners, re-install the gasket into the gasket channel in the frame. Make sure the gasket is fully seated.

# Grille - Plinth Installation

## REMOVING AND INSTALLING GRILLE (PLINTH STRIP/BASE FASCIA)

**⚠ WARNING**

**Disconnect electrical current to the unit before removing the grille (plinth strip/base fascia).**

**When using the unit, the grille (plinth strip/base fascia) must be installed.**

**Edges of sheet metal may be sharp.**

### Removing the grille (plinth strip/base fascia)

1. Disconnect electrical current to unit.

2. Using the included 7/64" Allen wrench, loosen (but do not remove) both grille (plinth strip/base fascia) lock screws. See below.

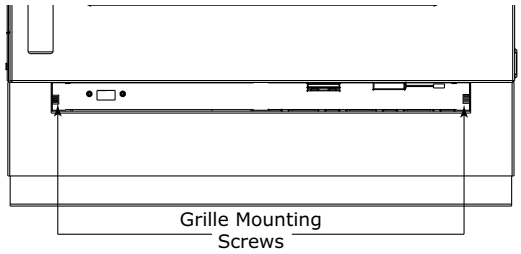


3. Gently pull grille (plinth strip/base fascia) away from unit until it stops.

4. Push grille (plinth strip/base fascia) rails towards the center of the unit to lift rails off lock screws.

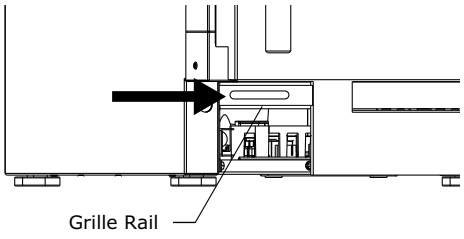


5. Pull grille (plinth strip/base fascia) free from unit.

### Installing the grille (plinth strip/base fascia)

1. Align slots in grille (plinth strip/base fascia) rail with screw heads in base of unit

2. Push grille (plinth strip/base fascia) rails towards the center of the unit and set rails over screw head.

3. Slide grille (plinth strip/base fascia) into position. Using included 7/64" Allen wrench tighten grille (plinth strip/base fascia) lock screws.

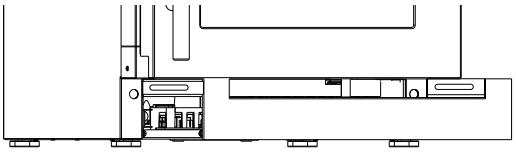

## ADJUSTING GRILLE (PLINTH STRIP/BASE FASCIA)

The grille (plinth strip/base fascia) has an automatic vertical plane adjustment and can also be adjusted on its horizontal plane as well. To adjust your grille (plinth strip/base fascia) to match your surrounding furniture, follow the instructions below.

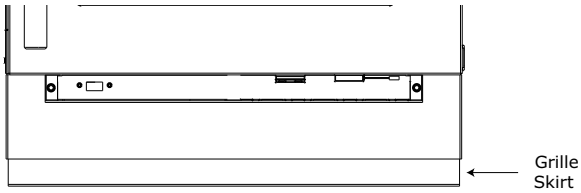


1. Loosen, but do not remove, the lock screws on the inside of the grille (plinth strip/base fascia) rails. Lock screws are located on the inside of each grille (plinth strip/base fascia) rail.

2. The grille (plinth strip/base fascia) can be extended horizontally by pulling out a maximum of 1-1/2" (38 mm). Do not exceed 1-1/2" (38 mm). Secure the lock screws after adjusting.

3. The grille (plinth strip/base fascia) skirt may be manually adjusted to the height of your floor. Simply raise or lower the skirt as needed.

## Door Swing

For models that are installed adjacent to a wall, 1/2" (13 mm) clearance is recommended from wall on hinge side to allow the door to open 90°. Allow for additional space for any knobs or pulls installed on the integrated panel/frame.

Units have a zero clearance when installed adjacent to cabinets.

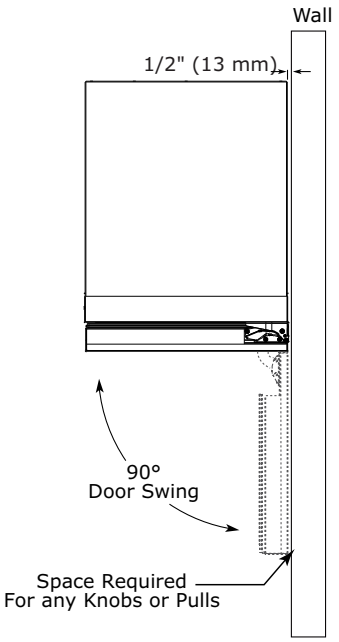

# Door Stop

Your U-Line unit was shipped to you with the optional 90° pin.

Your unit's door(s) will open 115° straight from the factory. If you would like the door stop at 90° follow these instructions.

**NOTICE**

**If your unit is already undercounter, it will need to be moved out to access the hinge. With the 90° stop pin in place, you will not be able to replace the hinge cover.**

1. Open door approximately 90°.

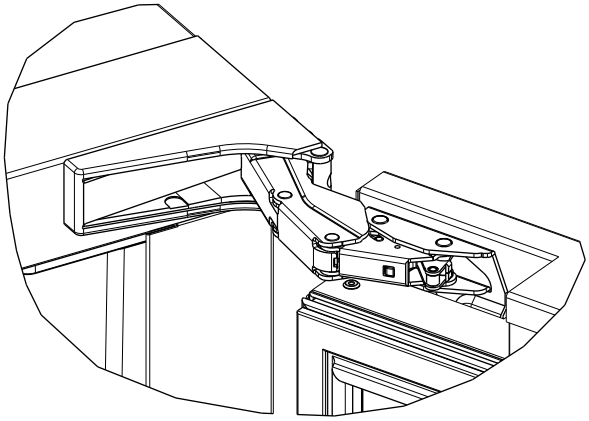

2. Remove hinge cover by lifting top and bottom of hinge cover and sliding the cover inwards to remove from hinge.

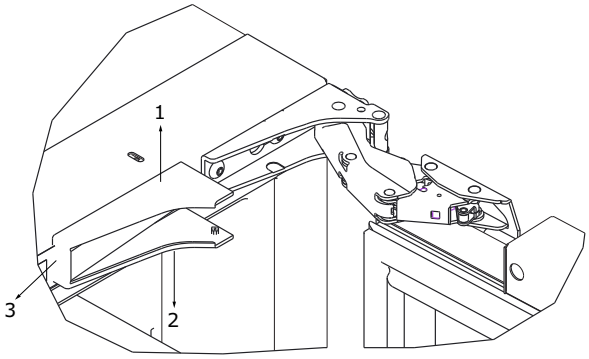


3. Once cover is removed, slide hinge pin into hole as shown. Pin should slide into place, stopping the door at 90°; if the pin does not go into the hole shown, hold the door less than 90° open and try again.

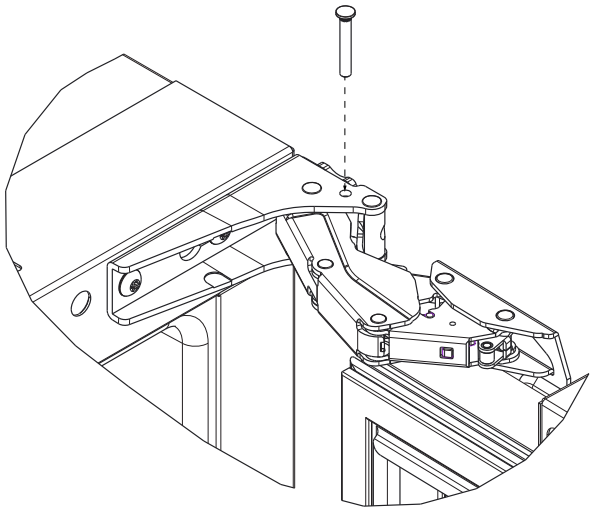

4. To fully seat the pin, tap it lightly with a hammer.

5. Carefully slide your unit back in place.

**NOTICE**

**The pin can be removed to return the door swing back to its original 115° swing by tapping the pin out from the bottom of the hinge.**

**CLOSER**

The door hinge has a self-closing feature that engages when the door is open approximately 6" (150 mm) (about 25°).

# Door Adjustments

### DOOR ALIGNMENT AND ADJUSTMENT

Align and adjust the door if it is not level or is not sealing properly. If the door is not sealed, the unit may not cool properly, or excessive frost or condensation may form in the interior.

### NOTICE

**Properly aligned, the door's gasket should be firmly in contact with the cabinet all the way around the door (no gaps). Carefully examine the door's gasket to ensure that it is firmly in contact with the cabinet. Also make sure the door gasket is not pinched on the hinge side of the door.**

**⚠ CAUTION**

**Do not attempt to use the door to raise or pivot your unit. This would put excessive stress on the hinge system.**

### Alignment and Adjustment Procedure

1. Open door and remove gasket near the hinges.
2. Using a T-25 Torx Bit, loosen each pair of Torx head screws on both the upper and lower hinge plates.
3. Square and align door as necessary.
4. Tighten Torx head screws on hinge.
5. Reinstall gasket into the channel starting at the corner.

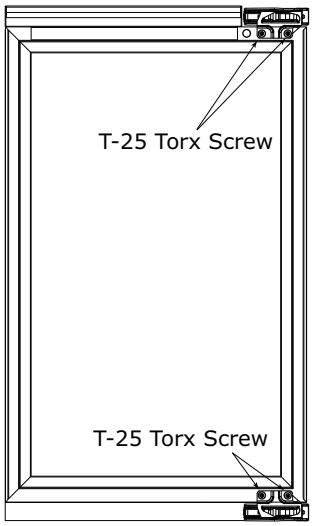


### REVERSING THE DOOR

1. Open door.
2. Remove top hinge cover by lifting top and bottom flaps and slide inwards. Repeat on bottom hinge.

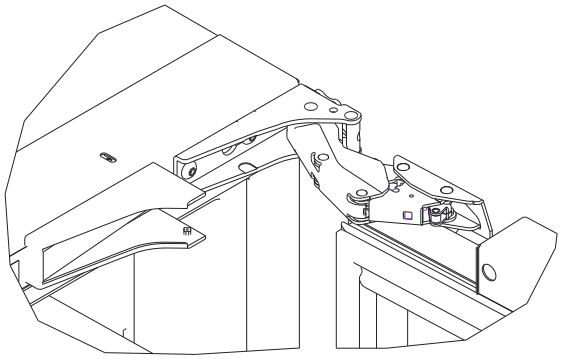

3. Using T-25 Torx bit loosen screw #1 and remove screw #2 on top and bottom hinge. Slide and remove the door from unit. Completely remove screw #1 on top and bottom.

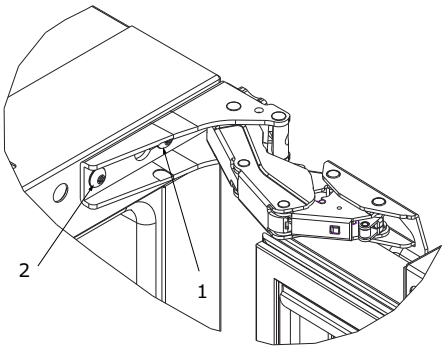


4. Remove caps from screw heads on opposite side (2 on top and 2 on bottom). Using #2 Phillips bit remove the 4 underlying screws. Reinstall the screws and caps on the opposite side.

5. Partially install screw #1 in the outer most holes on top and bottom. Rotate door 180°, align hinge over screw #1 and slide/seat into position. Reinstall screw #2 on top and bottom. Tighten both screws and install hinge cover.

**Align and adjust the door:**

Align and adjust the door (see DOOR ALIGNMENT AND ADJUSTMENT).

# First Use

All U-Line controls are preset at the factory. Initial startup requires no adjustments.

**NOTICE**

**U-Line recommends allowing the unit to run overnight before loading with product.**

When plugged in, the unit will begin operating under the factory default setting. Follow the on screen prompt for language selection and temperature units.

To turn the unit off, press ⏻ and hold for 5 seconds and release. The display will show a countdown to switching the unit off.

To power your unit on, simply press ⏻ and the unit will immediately switch on.

# Control Operation

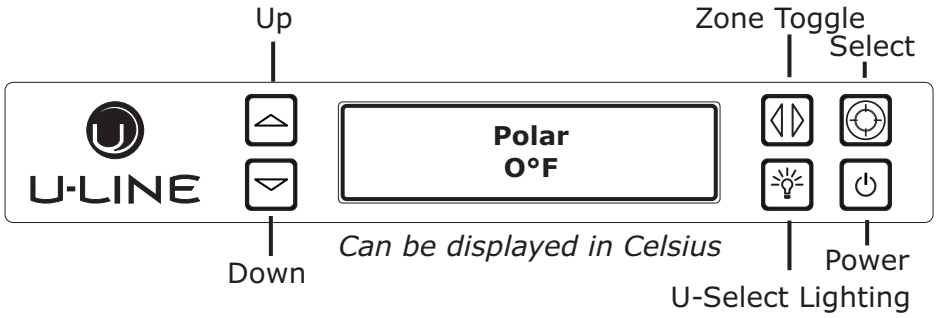


**CONTROL FUNCTION GUIDE**

| **FUNCTION** | **COMMAND** | **DISPLAY/OPTIONS** |
|---|---|---|
| OFF | Press ⏻ and hold | Display will count down from 5 to off. |
| ON | Press ⏻ and release | Unit will come on immediately. |
| Adjust temp | Press ▲ or ▼ to set temperature | Press ◀▶ to confirm temperature or wait 5 seconds. |
| Adjust lighting | Press 💡 to adjust lighting | Press ▲ or ▼ to set low, medium or high. |
| Light ON/OFF with door | Press 💡 to have light on/off with door | Press 💡 and release to scroll through timer settings. |
| Customer menu | Press ⚙ and hold for 5 seconds | Press ▲ or ▼ to scroll through menu. |

| **Mode** | **Set Point °F (°C)** | **Temperature Range °F (°C)** |
|---|---|---|
| Polar | 0 (-18) | (-5) - 5 ([-21] - [-15]) |

## U-SELECT® CONTROL

### Digital Display

The 3000 Series units are controlled by a feature rich, advanced OLED display control unit. The control panel allows adjustment to temperature set point, access to Energy Saver Mode, internal temperature readings, and many other features.

### ADJUSTING TEMPERATURE SETTINGS

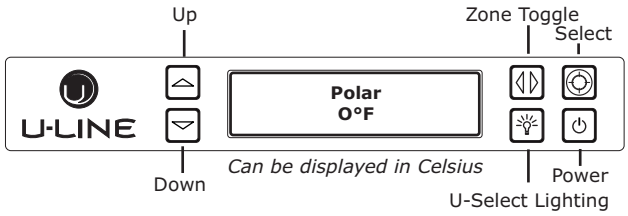


Each zone has a series of Mode Settings with a default value for each setting. Each Mode Setting can be further customized by fine tuning the temperature set point. See the chart below for a description of each mode and mode temperature ranges. Mode selection will vary by model.

### Mode Settings

| Setting | Default °F (°C) | Range °F (°C) |
|---|---|---|
| Polar | 0 (-18) | (-5) - 5 ([-21] - [- 15]) |

### Interior Lighting

Your U-Line 3000 Series unit uses a state of the art LED lighting system. The 3036 model dual zone's lighting can be independently controlled or set as a group.

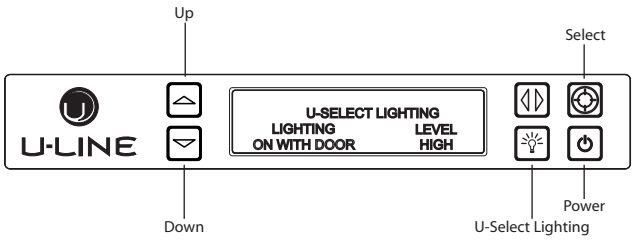


1. To begin, press to enter the lighting menu.

2. Press or to cycle through each available brightness setting (Low, Medium or High).

3. Press to cycle through each available timer setting. Selections include "On With Door", "On 3 Hours", "On 6 Hours", or "On 24 Hours".

4. To exit, press or simply wait for the menu to time out.

### Error Notification

The 3000 model series continuously monitors a series of inputs and parameters to ensure proper and efficient operation of your unit. Should the system detect a fault, an error notification will be displayed on the user interface. See below for a list of errors.

NOTE: Singe zone models will not use (L) left or (R) right zone indicators in error notification.

| ID | Description | Solution |
|---|---|---|
| No Comm | Unit lost communication to the display. | Disconnect and reconnect power to unit. Contact Customer Care if persistent. |
| (L) (R) Zone T Open | Left or right zone thermistor circuit open. | Contact Customer Care. |
| Amb Thrm Open | Ambient thermistor circuit open. | Contact Customer Care. |
| (L) (R) Zone T Short | Left or right zone thermistor circuit shorted. | Contact Customer Care. |
| Amb Thrm Short | Ambient thermistor circuit shorted. | Contact Customer Care. |
| (L) (R) Temp Hi 6H+ | Left or right zone temperature +10° over set point for over 6 hours. | Verify door is closed and sealing. Contact Customer Care if persistent. |
| (L) (R) Temp Hi 12H+ | Left or right zone temperature +10° over set point for over 12 hours. | Verify door is closed and sealing. Contact Customer Care if persistent. |
| (L) (R) Temp Lo 6H+ | Left or right zone temperature -10° under set point for over 6 hours. | Verify door is closed and sealing. Contact Customer Care if persistent. |
| (L) (R) Temp Lo 12H+ | Left or right zone temperature -10° under set point for over 12 hours. | Verify door is closed and sealing. Contact Customer Care if persistent. |
| (L) (R) Door Open 5M | Left or right door switch open for more then 5 minutes. | Verify door is closed and sealing. Contact Customer Care if persistent. |

## CUSTOMER MENU

The 3000 Series of U-Line undercounter refrigeration appliances contains a feature rich customer menu. The Customer Menu allows access to a series of advanced features including Energy Saver Mode, Sabbath Mode, actual temperature readings as well a method to restore factory defaults.

### 3000 Series - Customer Menu

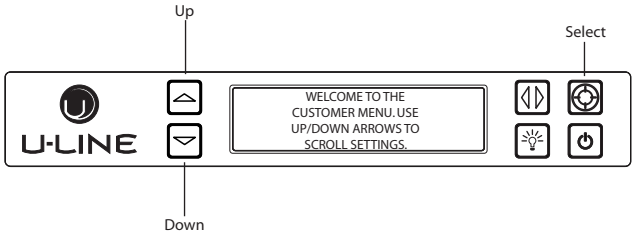


1. To access the Customer Menu hold ⊙ for 5 seconds.

2. Press ⌃ or ⌄ to scroll through available selections.

3. Press ⊙ to enter selected sub-menu.

4. To exit Customer Menu, press ⌄ to scroll to the bottom of the display and press ⊙ to select “Exit”.

### Actual Temps

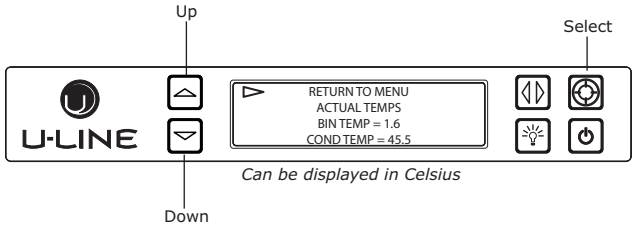


*Can be displayed in Celsius*

The Actual Temps option displays the actual temperature of each zone and evaporator, as well as ambient temperature.

1. To view actual temperature, press ⊙ and select “Actual Temps” from the Customer Menu.

2. Press ⌃ or ⌄ to scroll through available information.

3. To return to the Customer Menu, press ⊙ and select “Return to Menu”.

### Energy Saver Mode

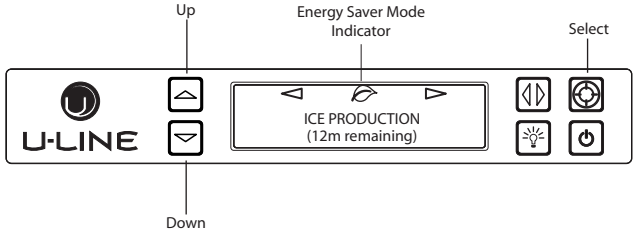


Energy Saver Mode reduces overall energy consumption by altering user set point, differential, lighting and tone settings. When in Energy Saver Mode a small leaf icon will be displayed on the main screen.

1. To enter Energy Saver Mode, first select Energy Saver from the Customer Menu.

2. Press ⌄ to select “Off” in the menu.

3. Press ⊙.

4. Press ⌃ or ⌄ to change the selection from Off to On.

5. Press ⊙ to confirm your selection.

6. To return to the Customer Menu, press ⊙ and select “Return to Menu”.

7. To cancel Energy Saver Mode simply return to the Customer Menu, select Energy Saver and change “On” to “Off”.

**Languages**

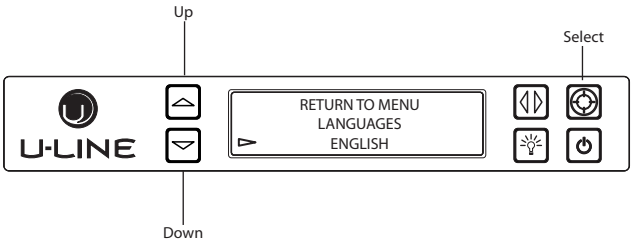


The U-Line 3000 Series of models supports a number of display languages including English, Spanish, French and German.

1. To change display language select Languages from the Customer Menu.
2. Press ▽ to select “English”.
3. Press ◎. “English” will begin to flash.
4. Press △ or ▽ to cycle through the available languages.
5. Press ◎ to confirm your choice.

**Sound Level**

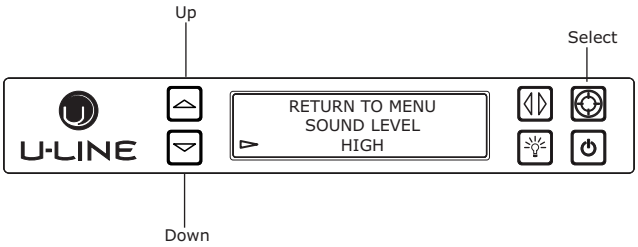


Audible alarms and alert tones support four different Sound Level settings, High, Medium, Low, and Off.

To select a new sound level, enter the Sound Level Menu from the Customer Menu.

1. Press ▽ to select the current sound level.
2. Press ◎. The current setting will begin to flash.
3. Press △ or ▽ to select a different level.
4. Press ◎ to confirm your choice.

**Fahrenheit/Celsius**

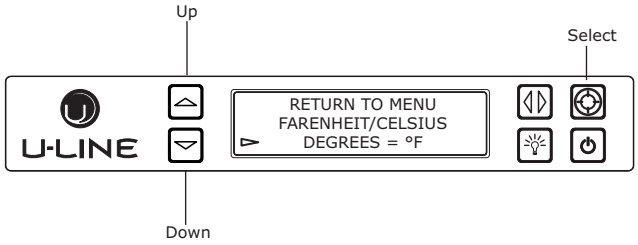


Temperature and set point information can be displayed in either Fahrenheit or Celsius.

To change from Fahrenheit to Celsius enter the Fahrenheit / Celsius Menu from within the Customer Menu.

1. Press ▽ to select “Degrees”.
2. Press ◎. The selection will begin to flash.
3. Press △ or ▽ to select between °F (Fahrenheit) or °C (Celsius).
4. Press ◎ to confirm your choice.

**Factory Default**

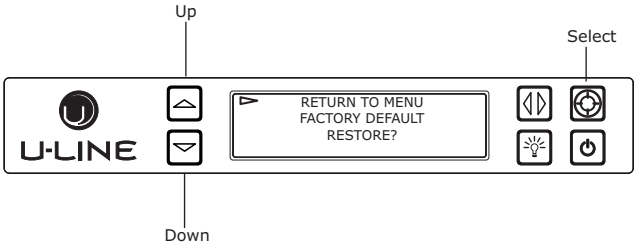


Factory Default will restore all settings to their factory default.

**To access Factory Default:**

1. Press ▽ to select “Factory Default”.

2. Press ◎.

**To restore settings to their factory default:**

3. Press ▽ to select “Restore?” and press ◎.

4. “Restore?” will change to “Restoring...” while settings are restored. When restoration is complete, “Restoring...” will return to “Restore?”.

To exit Factory Default, press △ to select “Return to Menu” and press ◎ to confirm.

**Help**

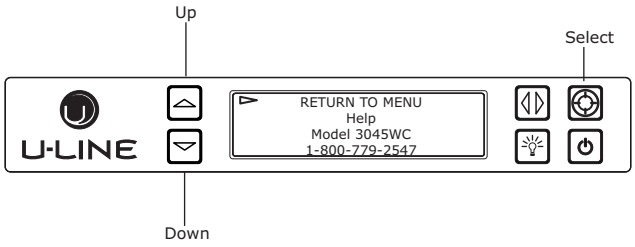


To access the Help Menu, select Help from the Customer Menu. Press △ or ▽ to scroll through available information. The Help screen displays the following:

- Model.
- U-Line contact information.
- Software version.
- Serial Number.

To exit the Help menu, press △ to select “Return to Menu” and press ◎ to confirm.

# Sabbath Mode

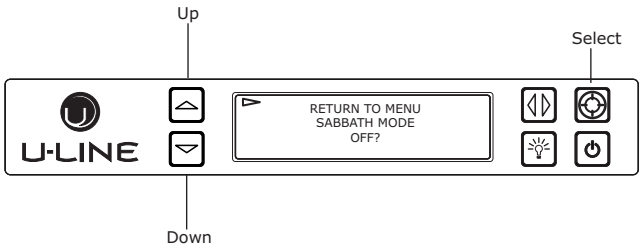


This unit offers a Sabbath mode for users who require this functionality during Sabbaths. Sabbath mode disables system responses to user initiated activities and all external functions, including lighting, display and audible alarms. The unit will still maintain internal temperatures and set points.

To enable Sabbath Mode:

1. Open the unit's door to activate the display.
2. To access the Customer Menu, hold ◎ for 5 seconds.
3. Press ⌃ or ⌄ to scroll through available selections.
4. Select Sabbath Mode from the Customer Menu by pressing ◎.
5. Press ⌄ to select "Off".
6. Press ◎. "Off" will begin to flash.
7. Press ⌃ or ⌄ to change "Off" to "On".
8. Press ◎ to confirm your selection.

The Display will fade out as the unit enters Sabbath Mode. Sabbath

Mode remains active until ⏻ is quickly pressed and released.

# Airflow and Product Loading

**NOTICE**

**The unit requires proper airflow to perform at its highest efficiency. Do not block the front grille, internal fans or vents at any time, or the unit will not perform as expected. Do not install the unit behind a door.**

Door Removed For Illustration Purposes

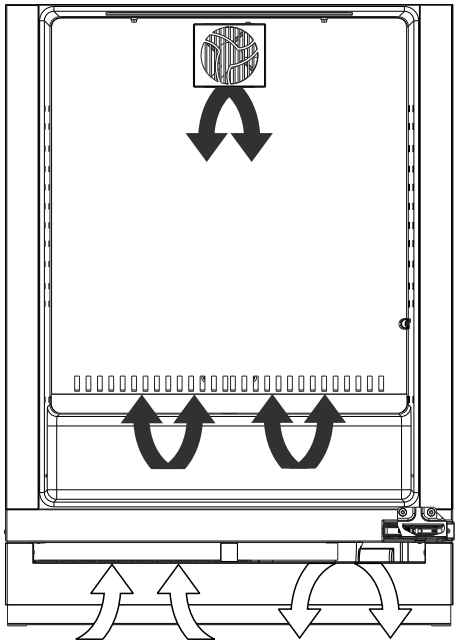

Internal Air Flow And Unit Ventilation Diagram

# Freezer Baskets

**FREEZER BASKET INSTALLATION & REMOVAL**

Freezer baskets are easily removed for cleaning. To remove the baskets follow the instructions below.

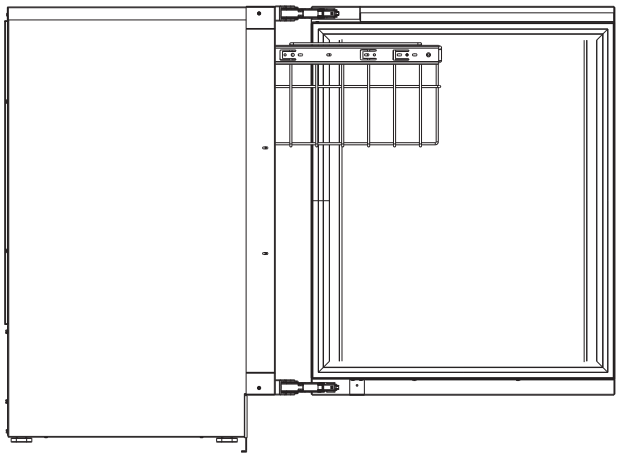

1. Fully extend the basket you wish to remove from the cabinet.

2. Lift the front lip of the basket and raise the basket off the racks.

3. Lift the rear of the basket off its seat on the rack.

4. Pull the basket up and away from the racks.

**To reinstall:**

1. Fully extend the empty rack from within the cabinet.

2. Set the rear of the basket over the rear of the slide.

3. Seat the front of the basket down and onto the slide rack.

4. Push the basket back into the cabinet.

**Cleaning**

Baskets may be cleaned in a soapy warm water solution. A general household disinfectant, safe for plastics, may be used if necessary. Be sure to completely dry your basket before reinstalling.

**NOTICE**

**Freezer baskets are NOT dishwasher safe.**

# Cleaning

### EXTERIOR CLEANING

#### Stainless Models

Stainless door panels and handles can discolor when exposed to chlorine gas, pool chemicals, saltwater or cleaners with bleach.

Keep your stainless unit looking new by cleaning with a good quality all-in-one stainless steel cleaner and polish monthly. For best results use Claire® Stainless Steel Polish and Cleaner. Comparable products are acceptable. Frequent cleaning will remove surface contamination that could lead to rust. Some installations may require cleaning weekly.

**Do not clean with steel wool pads.**

**Do not use stainless steel cleaners or polishes on any glass surfaces.**

Clean any glass surfaces with a non-chlorine glass cleaner.

**Do not use cleaners not specifically intended for stainless steel on stainless steel surfaces (this includes glass, tile and counter cleaners).**

If any surface discoloring or rusting appears, clean it quickly with Bon-Ami® or Barkeepers Friend Cleanser® and a nonabrasive cloth. Always clean with the grain. Always finish with Claire® Stainless Steel Polish and Cleaner or comparable product to prevent further problems.

**Using abrasive pads such as Scotchbrite™ will cause the graining in the stainless steel to become blurred.**

**Rust not cleaned up promptly can penetrate the surface of the stainless steel and complete removal of the rust may not be possible.**

#### Integrated Models

To clean integrated panels, use household cleaner per the cabinet manufacturer's recommendation.

### INTERIOR CLEANING

Disconnect power to the unit.

Clean the interior and all removed components using a mild nonabrasive detergent and warm water solution applied with a soft sponge or non-abrasive cloth.

Rinse the interior using a soft sponge and clean water.

**Do not use any solvent-based or abrasive cleaners.** These types of cleaners may transfer taste to the interior products and damage or discolor the lining.

### DEFROSTING

Under normal conditions this unit does not require manual defrosting. Minor frost on the rear wall or visible through the evaporator plate vents is normal and will melt during each off cycle.

If there is excessive build-up of 1/4" (6 mm) or more, manually defrost the unit.

Ensure the door is closing and sealing properly.

High ambient temperature and excessive humidity can also produce frost.

**⚠ CAUTION**

**DO NOT use an ice pick or other sharp instrument to help speed up defrosting. These instruments can puncture the inner lining or damage the cooling unit. DO NOT use any type of heater to defrost. Using a heater to speed up defrosting can cause personal injury and damage to the inner lining.**

**NOTICE**

**The drain pan was not designed to capture the water created when manually defrosting. To prevent water from overflowing the drain pan and possibly damaging water sensitive flooring, the unit must be removed from cabinetry.**

**To defrost:**

1. Disconnect power to the unit.
2. Remove all products from the interior.
3. Prop the door in an open position (2 in. [50 mm] minimum).
4. Allow the frost to melt naturally.
5. After the frost melts completely clean the interior and all removed components. (See INTERIOR CLEANING).
6. When the interior is dry, reconnect power and turn unit on.

# Cleaning Condenser

**INTERVAL - EVERY SIX MONTHS**

To maintain operational efficiency, keep the front grille (plinth strip/base fascia) free of dust and lint, and clean the condenser when necessary. Depending on environmental conditions, more or less frequent cleaning may be necessary.

**⚠ WARNING**

**Disconnect electric current to the unit before cleaning the condenser.**

**NOTICE**

**DO NOT use any type of cleaner on the condenser unit. Condenser may be cleaned using a vacuum, soft brush or compressed air.**

1. Remove the grille (plinth strip/base fascia). (See GRILLE-PLINTH INSTALLATION).

2. Clean the condenser coil using a soft brush or vacuum cleaner.

3. Install the grille (plinth strip/base fascia).

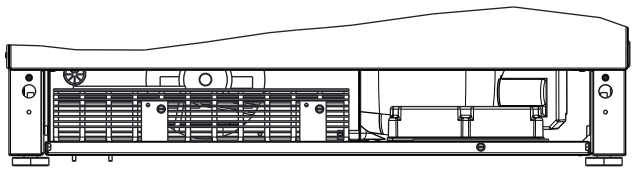

# Extended Non-Use

### VACATION/HOLIDAY, PROLONGED SHUTDOWN

The following steps are recommended for periods of extended non-use:

1. Remove all consumable content from the unit.

2. Disconnect the power cord from its outlet/socket and leave it disconnected until the unit is returned to service.

3. If ice is on the evaporator, allow ice to thaw naturally.

4. Clean and dry the interior of the unit. Ensure all water has been removed from the unit.

5. The door must remain open to prevent formation of mold and mildew. Open door a minimum of 2" (50 mm) to provide the necessary ventilation.

### WINTERIZATION

If the unit will be exposed to temperatures of 40°F (5°C) or less, the steps above must be followed.

**For questions regarding winterization, please call U-Line at +1.800.779.2547.**

**⚠ CAUTION**

**Damage caused by freezing temperatures is not covered by the warranty.**

# Troubleshooting

### BEFORE CALLING FOR SERVICE

If you think your U-Line product is malfunctioning, read the CONTROL OPERATION section to clearly understand the function of the control.

If the problem persists, read the NORMAL OPERATING SOUNDS and TROUBLESHOOTING GUIDE sections below to help you quickly identify common problems and possible causes and remedies. Most often, this will resolve the problem without the need to call for service.

### IF SERVICE IS REQUIRED

If you do not understand a troubleshooting remedy, or your product needs service, contact U-Line Corporation directly at +1.800.779.2547.

When you call, you will need your product Model and Serial Numbers. This information appears on the Model and Serial number plate located on the upper right or rear wall of the interior of your product.

### NORMAL OPERATING SOUNDS

All models incorporate rigid foam insulated cabinets to provide high thermal efficiency and maximum sound reduction for its internal working components. Despite this technology, your model may make sounds that are unfamiliar.

Normal operating sounds may be more noticeable because of the unit's environment. Hard surfaces such as cabinets, wood, vinyl or tiled floors and paneled walls have a tendency to reflect normal appliance operating noises.

Listed below are common refrigeration components with a brief description of the normal operating sounds they make. NOTE: Your product may not contain all the components listed.

- Compressor: The compressor makes a hum or pulsing sound that may be heard when it operates.
- Evaporator: Refrigerant flowing through an evaporator may sound like boiling liquid.
- Condenser Fan: Air moving through a condenser may be heard.
- Automatic Defrost Drain Pan: Water may be heard dripping or running into the drain pan when the unit is in the defrost cycle.

### TROUBLESHOOTING GUIDE

**⚠ DANGER**

**ELECTROCUTION HAZARD. Never attempt to repair or perform maintenance on the unit before disconnecting the main electrical power.**

Troubleshooting - What to check when problems occur:

| Problem | Possible Cause and Remedy |
|---|---|
| Interior Light Does Not Illuminate. | If the unit is cooling, it may be in Sabbath mode. |
| Light Remains on When Door Is Closed. | Turn off light switch if equipped.<br>Adjust light actuator bracket on bottom of door. |
| Unit Develops Frost on Internal Surfaces. | Frost on the rear wall is normal and will melt during each off cycle.<br>If there is excessive build-up of 1/4" or more, manually defrost the unit.<br>Ensure the door is closing and sealing properly.<br>High ambient temperature and excessive humidity can also produce frost. |
| Unit Develops Condensation on External Surfaces. | The unit is exposed to excessive humidity. Moisture will dissipate as humidity levels decrease. |
| Product Is Freezing. | Because product in contact with the rear wall may freeze, ensure no product is touching the rear wall.<br>Adjust the temperature to a warmer set point. |

| Problem | Possible Cause and Remedy |
|---|---|
| Product Is Not Cold Enough. | Air temperature does not indicate product temperature. See CHECKING PRODUCT TEMPERATURE below.<br>Adjust the temperate to a cooler set point.<br>Ensure unit is not located in excessive ambient temperatures or in direct sunlight.<br>Ensure the door is closing and sealing properly.<br>Ensure the interior light has not remained on too long.<br>Ensure nothing is blocking the front grille, found at the bottom of the unit.<br>Ensure the condenser coil is clean and free of any dirt or lint build-up. |

**CHECKING PRODUCT TEMPERATURE**

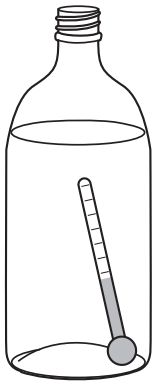

**To check the actual product temperature in the unit:**

1. Partially fill a plastic (nonbreakable) bottle with water.
2. Insert an accurate thermometer.
3. Tighten the bottle cap securely.
4. Place the bottle in the desired area for 24 hours.
5. Avoid opening the unit during the testing period.
6. After 24 hours, check the temperature of the water. If required, adjust the temperature control in a small increment (see CONTROL OPERATION).

**Causes which affect the internal temperatures of the cabinet include:**

- Temperature setting.
- Ambient temperature where installed.
- Installation in direct sunlight or near a heat source.
- The number of door openings and the time the door is open.
- The time the internal light is illuminated. (This mainly affects product on the top rack or shelf.)
- Obstruction of front grille or condenser.

# U-Line Corporation (U-Line) Limited Warranty

### One Year Limited Warranty

For one year from the date of original purchase, this U-Line product warranty covers all parts and labor to repair or replace any part of the product that proves to be defective in materials or workmanship. For products installed and used for normal residential use, material cosmetic defects are included in this warranty, with coverage limited to 60 days from the date of original purchase. All service provided by U-Line under the above warranty must be performed by U-Line factory authorized service, unless otherwise specified by U-Line. Service provided during normal business hours.

### Available Second Year Limited Warranty

Beyond the standard one year warranty outlined above, U-Line offers an extension of the one year warranty coverage for an additional second year from the date of purchase, free of charge. To take advantage of this second year warranty, you must register your product with U-Line within two months from the date of purchase at u-line.com providing proof of purchase.

### Five Year Sealed System Limited Warranty

For five years from the date of original purchase, U-Line will repair or replace the following parts, labor not included, that prove to be defective in materials or workmanship: compressor, condenser, evaporator, drier, and all connecting tubing. All service provided by U-Line under the above warranty must be performed by U-Line factory authorized service, unless otherwise specified by U-Line. Service provided during normal business hours.

### Terms

These warranties apply only to products installed in any one of the fifty states of the United States, the District of Columbia, or the ten provinces of Canada. The warranties do not cover any parts or labor to correct any defect caused by negligence, accident or improper use, maintenance, installation, service, repair, acts of God, fire, flood or other natural disasters. The product must be installed, operated, and maintained in accordance with the U-Line User Guide.

The remedies described above for each warranty are the only ones that U-Line will provide, either under these warranties or under any warranty arising by operation of law. U-Line will not be responsible for any consequential or incidental damages arising from the breach of these warranties or any other warranty, whether express, implied, or statutory. Some states do not allow the exclusion or limitation of incidental or consequential damages, so the above limitation or exclusion may not apply to you. These warranties give you specific legal rights, and you may also have other rights which vary from state to state.

Any warranty that may be implied in connection with your purchase or use of the product, including any warranty of *merchantability* or any warranty *fit for a particular purpose* is limited to the duration of these warranties, and only extends to five years in duration for the parts described in the section related to the five year limited warranty above. Some states do not allow limitations on how long an implied warranty lasts, so the above limitations may not apply to you.

- The warranties only apply to the original purchaser and are non-transferable.
- The second year and five year warranties cover products installed and used for normal residential or designated marine use only.
- The warranties apply to units operated outside only if designed for outdoor use by model and serial number.
- Replacement water filters, light bulbs, and other consumable parts are not covered by these warranties.
- The start of U-Line's obligation is limited to four years after the shipment date from U-Line.
- In-home instruction on how to use your product is not covered by these warranties.
- Food, beverage, and medicine loss are not covered by these warranties.
- If the product is located in an area where U-Line factory authorized service is not available, you may be responsible for a trip charge or you may be required to bring the product to a U-Line factory authorized service location at your own cost and expense.
- Units purchased after use as floor displays, and/or certified reconditioned units, are covered by the limited one year warranty only and no coverage is provided for cosmetic defects.
- Signal issues related to Wi-Fi connectivity are not covered by these warranties.

For parts and service assistance, or to find U-Line factory authorized service near you, contact U-Line:
8900 N. 55th Street, Milwaukee, WI 53223 • u-line.com • onlineservice@u-line.com • +1.800.779.2547

Copyright © 2014/2017 U-Line Corporation. All Rights Reserved. | Publication Number 30379 | 10/2017 Rev. L

# Wire Diagram

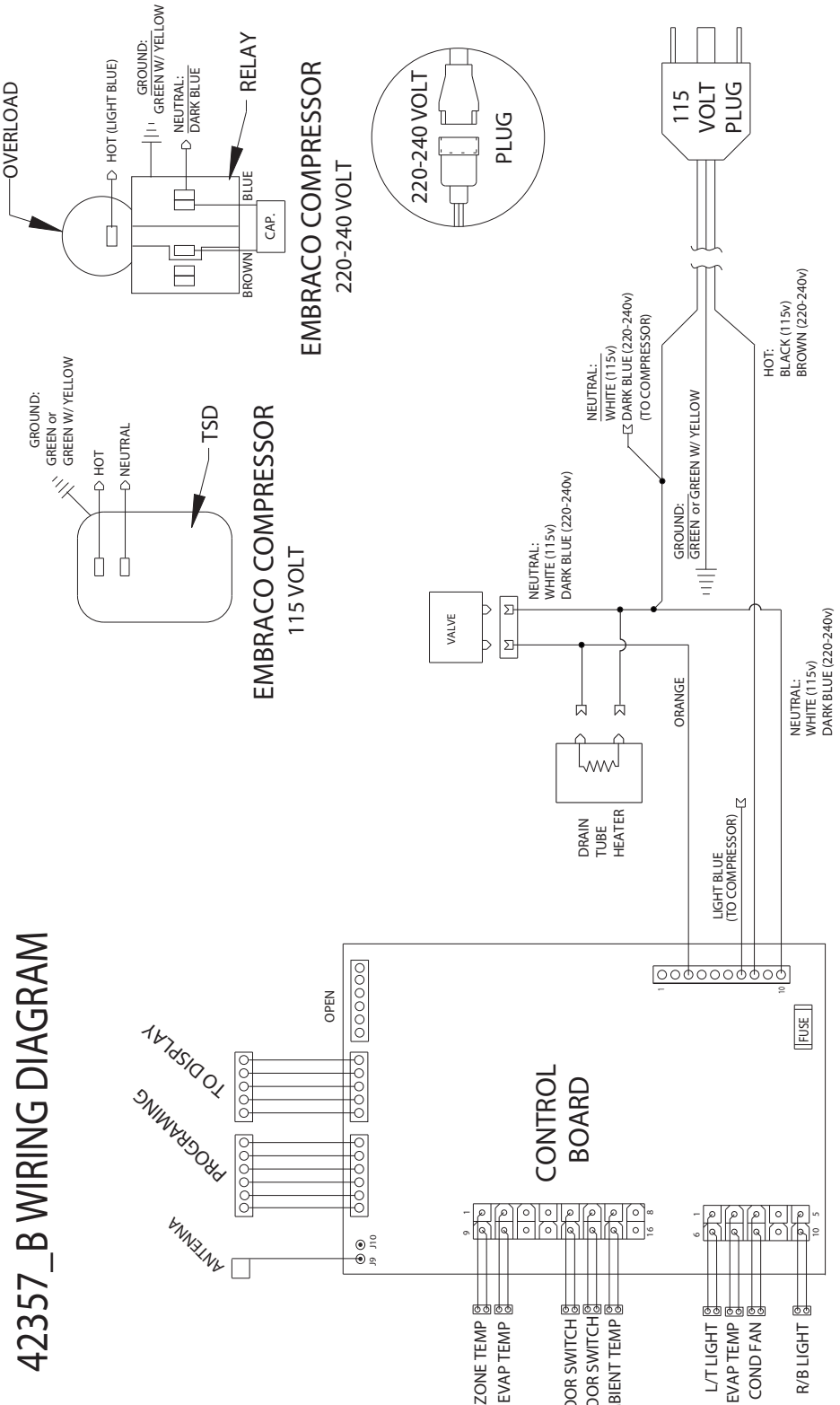

# Product Liability

Field service technicians are authorized to make an initial assessment in the event of reported damages. If there are any questions about the process involved, the technician should call U-Line for further explanation.

While inspecting for defects or installation issues, photos should be taken to document any damages or issues found.

During the assessment, if the service technician is able to find the source of the damage and it can be resolved by replacement of a part, the servicer is authorized to replace the part in question. The part that caused the damage must be returned to U-Line in its entirety. The part must be clearly labeled with the serial number of the unit it was removed from, the date, and the servicer who removed the part.

If the service technician determines the damage is the result of installation issues (water connection/drain, etc.), the consumer would be notified and the issues shall be resolved at the direction of the consumer.

If damage is evident and the service technician is unable to find the source, U-Line must be contacted at 1-800-799-2547 for further direction

8900 N. 55th Street • Milwaukee, WI 53223
T: +1.414.354.0300 • F: +1.414.354.354.5696
Website: www.u-line.com

**Right product. Right place.**
**Right temperature Since 1962.**

## Warranty Claims

The following information defines the parameters for filing a warranty claim:

- Valid serial number needed
- Valid model number needed
- Narda (or equivalent) form or submitted online at www.u-line.com
- 60 day submittal deadline from date of completed service
- Only one repair or unit per warranty claim
- Refrigerant should be labeled and included on the labor submittal
- Door and water level adjustments are covered 30 days from install date.

Serial Number Requirements:

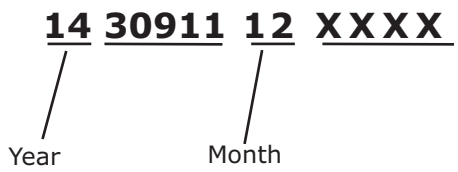


A typical serial number is shown above. The first two digits of the first segment, 14, represents the production year. The number between the dashes, 12, represents the production month. In most cases, warranty status can be verified by the production date information within the serial number.

- Alternatively, a Proof of Purchase (or equivalent) may submitted with the warranty claim to document warranty status. We also accept the following information to verify warranty status:
- New Construction Occupancy Documents
- Closing Paperwork
- Final Billing – Remodel

Noting all of the following on the warranty claim will be considered proof of purchase, hard copy will not be required:

- Name of the selling Dealer
- Date of purchase/installation
- Order or Invoice number (if available)
- Description of document reviewed (i.e. store receipt, closing paperwork, etc)

Parts and labor claims are paid separately. Indicate part numbers and description for parts used in the warranty repair. Include the purchase invoice and name of the parts supplier used to procure the parts.

# Parts

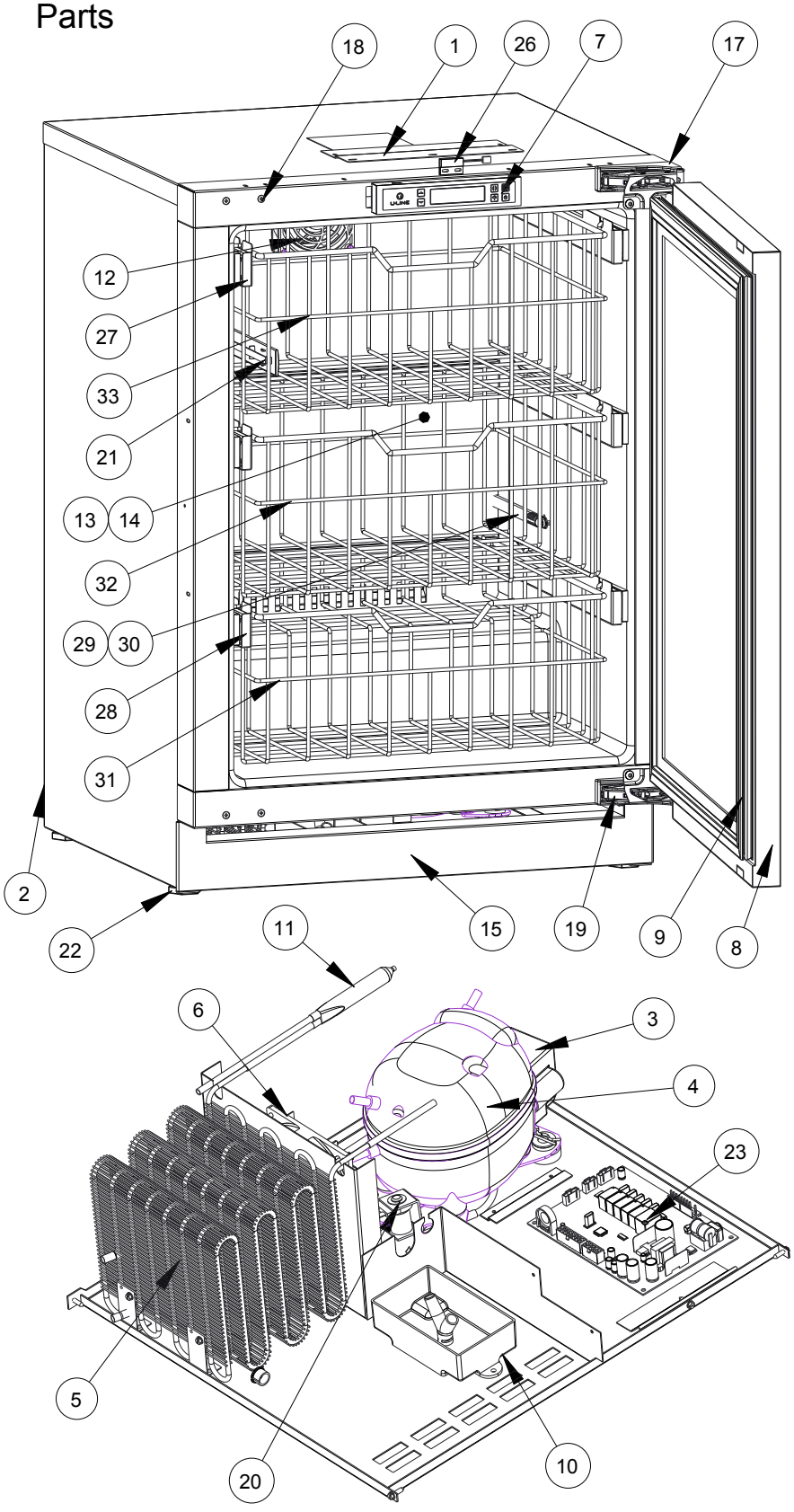


| U-3024FZRINT-00B | | |
|---|---|---|
| Item | Description | U-Line P/N |
| 1 | Anti tip bracket w/screws | 80-54012-00 |
| 2 | Back panel | 80-54107-00 |
| 3 | Compressor electricals only | 80-54167-00 |
| 4 | Compressor w/electricals | 80-54166-00 |
| 5 | Condenser | 80-54043-00 |
| 6 | Condenser fan w/screws | 80-54106-00 |
| 7 | Display module | 80-54032-00 |
| 8 | Door assembly w/o hinges | 80-54168-00 |
| 9 | Door gasket | 80-54039-00 |
| 10 | Drain pan w/double sided tape | 80-54002-00 |
| 11 | Drier | 80-54055-00 |
| 12 | Evap fan w/cover and screws | 80-54098-00 |
| 13 | Evaporator | 80-54099-00 |
| 14 | Evaporator cover | 80-54101-00 |
| 15 | Grille w/screws | 80-54052-00 |
| 16 | Heater Assy | 80-54116-00 |
| 17 | Hinge covers(2 pcs) | 80-54001-00 |
| 18 | Hinge mounting hole covers | 80-54024-00 |
| 19 | Hinges(2) w/screws and covers | 80-54013-00 |
| 20 | Hot gas valve and coil | 80-54169-00 |
| 21 | LED light strip and cover assy | 80-54000-00 |
| 22 | Leg Levelers (4) | 80-54019-00 |
| 23 | Main board(no wires or case) | 80-54008-00 |
| 24 | Packaging | 80-54159-00 |
| 25 | Power cord | 80-54172-00 |
| 26 | Reed switch | 80-54134-00 |
| 27 | Slide assembly | 80-54111-00 |
| 28 | Slide assembly, bottom | 80-54112-00 |
| 29 | Thermistor (1 piece) | 80-54006-00 |
| 30 | Thermistor cover and pin | 80-54023-00 |
| 31 | Wire bin, bottom | 80-54110-00 |
| 32 | Wire bin, middle | 80-54109-00 |
| 33 | Wire bin, top | 80-54108-00 |

# Ordering Replacement Parts

If you have a purchasing account, please utilize our service website to order parts.

Orders may also be placed by Fax or phone. See our contact information below:

www.U-LineService.com (with service login)
FAX Number: +1.414.354.5696
Phone Number: +1.800.779.2547

**NOTICE**

**Use only genuine U-Line replacement parts. The use of non-U-Line parts can reduce speed of ice production, cause water to overflow from ice maker mold, damage the unit, and void the warranty.**

Warranty parts will be shipped at no charge after U-Line confirms warranty status. Please provide the model, serial number, part number and part description. Some parts will require color or voltage information.

If U-Line requires the return of original parts, we will inform you when the parts order is taken. This requirement will be noted on your packing list. A prepaid shipping label will be included with the replacement part. Please enclose a copy of the parts packing list and any labor claims with your return. Please be sure the model and serial numbers are legible on the paperwork. Tag the part with the reported defect.

When ordering a non-warranty part, you will need an open account and tax exemption on file at U-Line. Another option would be to visit www.u-line.com to locate an authorized parts distributor in your area.

# System Diagnosis Guide

### REFRIGERATION SYSTEM DIAGNOSIS GUIDE

| System Condition | Suction Pressure | Suction Line | Compressor Discharge | Condenser | Capillary Tube | Evaporator | Wattage |
|---|---|---|---|---|---|---|---|
| **Normal** | Normal | Slightly below room temperature | Very hot | Very hot | Warm | Cold | Normal |
| **Overcharge** | Higher than normal | Very cold may frost heavily | Slightly warm to hot | Hot to warm | Cool | Cold | Higher than normal |
| **Undercharge** | Lower than normal | Warm-near room temperature | Hot | Warm | Warm | Extremely cold near inlet - Outlet below room temperature | Lower than normal |
| **Partial Restriction** | Somewhat lower than normal vacuum | Warm - near room temperature | Very hot | Top passes warm - Lower passes cool (near room temperature) due to liquid | Room temperature (cool) or colder | Extremely cold near inlet - Outlet below room temperature backing up | Lower than normal |
| **Complete Restriction** | In deep vacuum | Room temperature (cool) | Room temperature (cool) | Room temperature (cool) | Room temperature (cool) | No refrigeration | Lower than normal |
| **No Gas** | 0 PSIG to 25" | Room temperature (cool) | Cool to hot | Room temperature (cool) | Room temperature (cool) | No refrigeration | Lower than normal |

# Compressor Specifications

**⚠ DANGER**

**Electrocution can cause death or serious injury. Burns from hot or cold surfaces can cause serious injury. Take precautions when servicing this unit.**

**Disconnect the power source.**

**Do not stand in standing water when working around electrical appliances.**

**Make sure the surfaces you touch are not hot or frozen.**

**Do not touch a bare circuit board unless you are wearing an anti-static wrist strap that is grounded to an electrical ground or grounded water pipe.**

**Handle circuit boards carefully and avoid touching components.**

To measure the start winding resistance, measure across the C and S pins.

To measure the run winding resistance, measure across the C and R pins.

Also check S to R and you should get the sum of the run and start windings.

To ensure the windings are not shorted, check the S and R to ground.

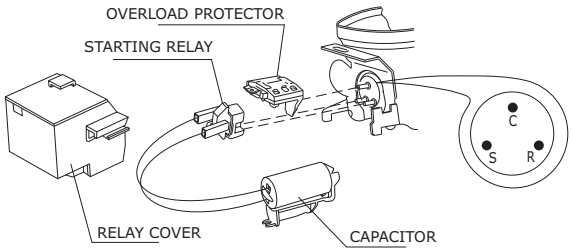


**Electrical Relay and Overload Protector**

| | **EM2Z60HLT** |
|---|---|
| Refrigerant | R134a |
| Voltage | 115 - 127 VAC |
| Frequency | 60 Hz |
| Run Cap | 12µF/180 VAC |
| Start Winding | 5.30 Ohm at 77°F/25°C |
| Run Winding | 4.25 Ohm at 77°F/25°C |
| LRA | 14.6 A |
| FLA | 2.10 A |
| Starting Device | 71053 |
| Overload | 71052 |

* All resistance readings are ±10%

# Troubleshooting - Extended

## SPECIFIC ERRORS AND ISSUES

The technically advanced diagnostic capabilities of the electronic controls utilized on the 3000 series units allows for easy and thorough trouble shooting.

Navigation of the control is the key and is explained in the CONTROL OPERATION section of the manual, along with control button layout, control function descriptions, a service mode menu and service menu selection explanations.

Verification of temperature and thermistor performance can be identified by directly viewing actual temperature readings in the service mode.

Component failure issues can be identified through service mode menu selection, “Relay Toggle” Individual components can be switched on and off to check for both proper function of a specific component and also delivery of supply voltage to the components through the relays and DC outputs located on the relay/power board.

Included in this section is some diagnostic tips and as always, if additional help is required please contact the U-Line Corp, “Customer Care Facility” at +1.800.779.2547 for assistance.

**⚠ CAUTION**

**Never attempt to repair or perform maintenance on the unit until the main electrical power has been disconnected from the unit.**

**TROUBLESHOOTING GUIDE**

| **Concern** | **Potential Causes** | **Suggested Remedy** |
|---|---|---|
| Not Cooling | Compressor overheating | Verify proper air flow through condenser (Refer to Airflow/General Information Section). |
| | | Confirm condenser fan operation (Refer to Airflow/General Information Section). |
| | | Confirm proper compressor operating voltage (Refer to Toggle/ Compressor Information Section). |
| | Compressor not operating | Confirm proper compressor operating voltage (Refer to Toggle/ Compressor Information Section to initiate power to the compressor). |
| | | Test overload and relay, replace as needed. |
| | Compressor operating - no cooling | Refer to System Diagnosis Guide. |
| | Evaporator fan not operating | Refer to Convection Cooling Section. |
| Frozen Product | Ensure proper use of Quick Chill mode | Refer to Control Operation Section. |
| | Control set too cold | Refer to Adjusting Temperature Settings Section |
| | Review logged error codes | Refer to Fault System Diagnosis Guide. |
| | Thermistor failure | Refer to Thermistor Failure Section |
| Frost Buildup Inside Unit | Door Ajar or Restricted from Closing | Check door clearance to adjoining cabinetry. Check distribution of product in unit. |
| | Evaporator fan not operating | Use #19, Component Testing in Service Mode. |
| | Thermistor failure | Refer to Thermistor Failure Section. |
| Display Not Working | Unit placed in Sabbath mode? | Refer to Sabbath Mode Section. |
| | Display unplugged | Verify that both ends of the display wiring are firmly connected. |
| | Display wiring broken or damaged | Perform continuity test of wiring and replace as needed. |
| Internal Lights Not Working | Control Setting | Refer to the Interior Lighting Section. |
| | | Unit set to Sabbath Mode. Refer to the Sabbath Mode Section. |
| | Door switch misaligned or defective | Refer to Reed Switch Section. |
| Noisy | Refrigeration tubing touching cabinet | Carefully reposition tubing. |
| | Fan blade obstruction (wiring, foam insulation, packaging material) | Remove obstruction. |

## MAIN CONTROL

The main control board is very robust and is rarely the cause of system issues. It is important to fully diagnose the board for any suspected failures before attempting to remove the board for replacement or service. Follow the guidelines below to fully test and diagnose the main control.

### Power Fault

If the unit does not (or seems to not) power on, follow the flow chart below to help diagnose the issue. Before beginning it is important to first verify the unit is not simply set to sabbath mode.

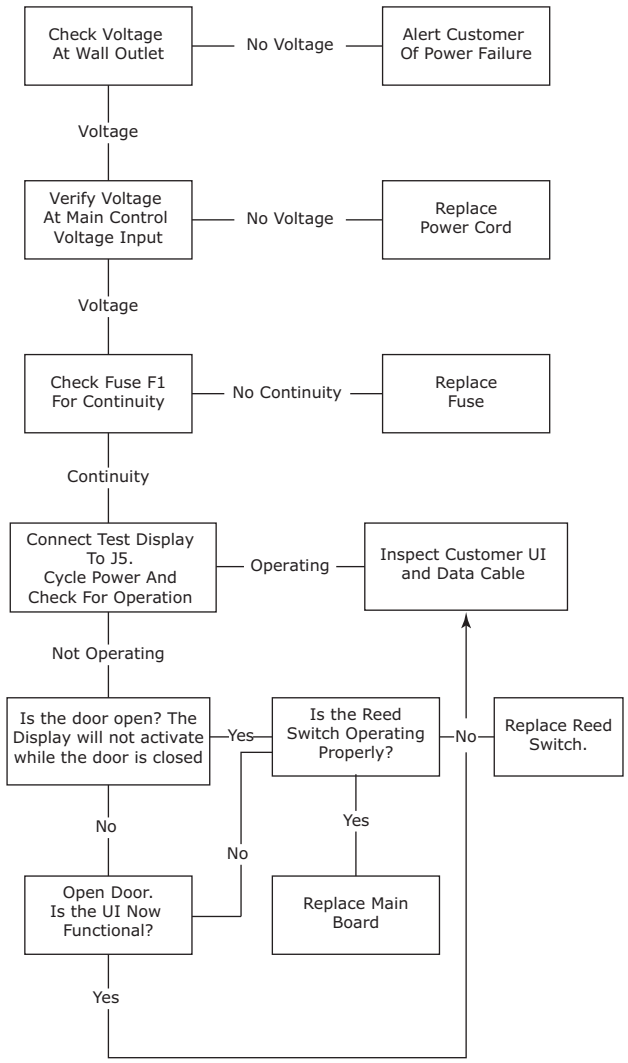


### Testing The Main Control

If the main control is suspected of being faulty, the following procedure should be performed to verify main control for functionality.

### Relay & DC Outputs

One of the primary functions of the main control is to operate the multiple relay and DC outputs during each cycle. Verify proper operation of these relays using the following procedure.

1. Enter “Relay Toggle” through the service menu.

**NOTICE**

**Frequently toggling the compressor relay could force the compressor into overload. The compressor will automatically deactivate during an overload and will remain deactivated until the overload switch cools. This could take some time. It is important to allow the compressor at least 5 minutes off time between relay cycles.**

2. Toggle the relay. Its related component should activate / deactivate with the switching of the relay. If it does not, see “Component Testing.”

### Inputs

The main control monitors a number of thermistor inputs and switch states during operation. It would be unlikely that an error in reading an input would be at the board level. Always attempt to replace the faulty switch or thermistor input with a known working sample to verify proper board operation.

**Other Suspected Main Control Faults**

If other components have been ruled out as being faulty but the unit continues to have operating issues, it is most likely due to a configuration error. Configuration errors can be cleared by restoring the unit to its factory default setting. Factory defaults may be restored through the service menu.

**⚠ CAUTION**

**Precautions must be taken while working with live electrical equipment. Be sure to follow proper safety procedures while performing tests on live systems.**

**CONVECTION COOLING**

All 3000 series units are equipped with an advanced convection cooling system. Convection cooling stabilizes cabinet temperature, cools product faster and increases energy efficiency.

**Evaporator Fan**

The evaporator fan is responsible for circulating warm air from the refrigeration zone, past the evaporator and back into the refrigerated zone.

The evaporator fan is factory set to have a 1 minute delay at the beginning of a cooling cycle. This delay gives the evaporator time to cool properly before warm air is passed over it. The fan will continue to run for an additional 2 minutes at the end of a cooling cycle. Fan delay times can be modified through the service menu.

Evaporator fan operation is also determined by door switch state. If the door switch circuit opens the fan will stop. When the door switch circuit is closed the fan will either continue running with the cooling cycle, or if not currently cooling, the fan will run for 1 minute to circulate air and clear any condensation that may have appeared on glass doors and shelves.

NOTE: If the unit is set to sabbath mode the evaporator fan will no longer respond to the state of the door switch.

In order to operate efficiently the evaporator fan blade and vents should be unobstructed and free of any dust buildup.

**FAULT SYSTEM DIAGNOSIS GUIDE**

| Error | Solution 1 | Solution 2 | Solution 3 |
|---|---|---|---|
| No Comm | Inspect Customer UI and Data Cable (if defective replace entire door) | | |
| Zone T Open | Inspect zone thermistor connection. Replace if necessary. | Inspect main control wire harness for splits or breaks. Repair split or cut cabling. | |
| Evap T Open | Inspect evaporator thermistor connection. Replace if necessary. | Inspect main control wire harness for splits or breaks. Repair split or cut cabling. | |
| Amb Thrm Open | Inspect ambient thermistor connection. Replace if necessary. | Inspect main control wire harness for splits or breaks. Repair split or cut cabling. | |
| Zone T Short | Inspect thermistor cable for pinch points or damage. Replace if necessary. | Inspect wire harness from main control board for pinch points or damage. Repair split or pinched cabling. | |
| Evap T Short | Inspect thermistor cable for pinch points or damage. Replace if necessary. | Inspect wire harness from main control board for pinch points or damage. Repair split or pinched cabling. | |
| Amb Thrm Short | Inspect thermistor cable for pinch points or damage. Replace if necessary. | Inspect wire harness from main control board for pinch points or damage. Repair split or pinched cabling. | |
| Temp Hi 6H+ | If excessive frost is also noted, inspect door and door gasket for proper seal and alignment. | Inspect evaporator fan for proper operation. | Inspect refrigeration system. Reference the System Diagnosis Guide. |
| Temp Hi 12H+ | If excessive frost is also noted, inspect door and door gasket for proper seal and alignment. | Inspect evaporator fan for proper operation. | Inspect refrigeration system. Reference the System Diagnosis Guide. |
| Temp Lo 6H+ | Inspect main control for proper relay operation. | Inspect refrigeration system. Reference the System Diagnosis Guide. | |
| Temp Lo 12H+ | Inspect main control for proper relay operation. | Inspect refrigeration system. Reference the System Diagnosis Guide. | |
| Door Open 5M | Verify door closes properly. | Inspect cable arm, verify presence of magnet, verify proper operation and movement or arm. | Inspect reed switch wiring. |

**THERMISTORS**

Thermistors are used for various temperature readings. Thermistors provide reliable temperature readings using a resistance which varies based on surrounding temperatures. If a faulty thermistor is suspected it may be tested using an accurate ohmmeter. In an ice water bath (32°F) resistance should measure 16.1 kilohms.

**5K OHMS @ 77°**
**16.1K OHMS - 32°F ambient**

**THERMISTOR FAILURE**

**Limp Mode Data Table**

| Mode | ON | OFF |
|---|---|---|
| Beverage/Drinks | 10 min. | 45 min. |
| Market/Fresh | 10 min. | 45 min. |
| Root | 5 min. | 90 min. |
| Pantry | 10 min. | 45 min. |
| Deli | 10 min. | 45 min. |

**Zone Thermistor**

If the zone thermistor fails, the unit will continue to operate in a timed limp mode which varies by model. The unit will otherwise operate normally. The error will be displayed in the error log.

**Evaporator Thermistor**

If the evaporator thermistor fails, the unit will rely on a preset defrost time during defrost cycles. The unit will otherwise operate normally. Evaporator thermistor errors will be displayed in the error log.

Always assure that all thermistor connections are clean and dry. Whenever opening a thermistor connection be sure to apply a fresh dab of die electric grease.

**REED SWITCH**

A reed switch is used to monitor door state. When the door is closed magnetic force pulls the reed to its contact and closes the circuit which turns the light and display off. When the door is open the reed pulls away from the contact and opens the circuit. If the door is left open for longer than 5 minutes, the switch will trigger an error code and set an audible warning.

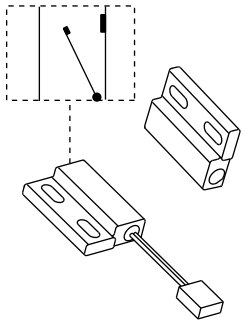

Magnet Away From Switch
(Door Open)
(Switch Open)

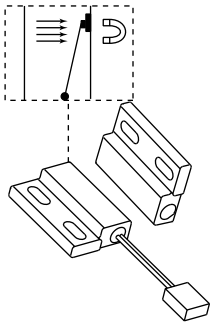

Magnet Close To Switch
(Door Closed)
(Switch Closed)

## Control Operation - Service

TO ENTER THE MAIN SERVICE MENU

PRESS AND HOLD FOR 5 SECONDS AND

TO GO TO NEXT SUB-MENU ITEM
YOU MUST ARROW UP TO "RETURN TO MENU"

TOUCH AND RELEASE TO RETURN TO THE MAIN MENU

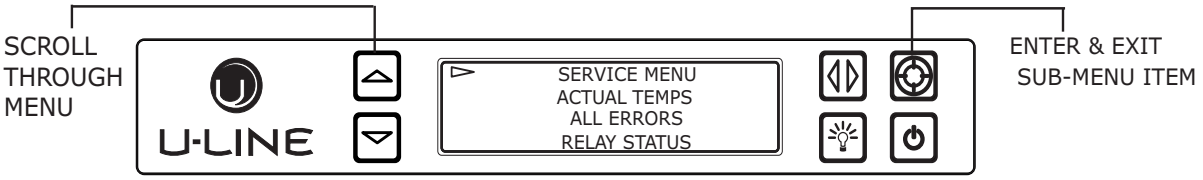


| | | |
|---|---|---|
| ACTUAL TEMPS | SHOWS TEMPERATURES WITHOUT OFFSETS. EACH ZONE HAS AN EVAP AND AIR THERMISTOR. EACH UNIT HAS AN AMBIENT THERMISTOR | RETURN TO MENU<br>ACTUAL TEMPS<br>LEFT ZONE = 52°<br>LEFT EVAP = 52° |
| ALL ERRORS | DISPLAYS THE NUMBER OF TIMES AN ERROR HAS OCCURRED<br>SCROLL TO THE END TO ERASE THE ERROR CODES | RETURN TO MENU<br>ALL ERRORS<br>NO COMM 3<br>L ZONE T OPEN 0 |
| RELAY STATUS | DISPLAYS THE CURRENT STATUS OF THE RELAYS ON THE BOARD<br>(not all relays are used on all models) | RETURN TO MENU<br>RELAY STATUS<br>MULL COND DEF LVLV<br>OFF OFF OFF ON |
| RELAY TOGGLE | ALLOWS THE RELAYS TO BE TOGGLED ON/OFF TO CHECK RELAY & COMPONENT<br>YOU CAN TURN ON MULTIPLE RELAYS TO CHECK A ZONE, (COMP FAN ETC) | RETURN TO MENU<br>RELAY TOGGLE<br>MULL OFF<br>COND OFF |
| INPUT STATUS | DISPLAYS DOOR SWITCH STATE, TEST INPUT, AND USB STATE | RETURN TO MENU<br>INPUT STATUS<br>LEFT DOOR CLOSED<br>RIGHT DOOR OPEN |
| OUTPUTS | MONITORS THE STATE OF DC OUTPUTS<br>(evap & condenser fans 0 - 100% and lighting off - low - med - high) | RETURN TO MENU<br>OUTPUTS<br>L EVAP FAN = 0%<br>R EVAP FAN = 0% |
| OFFSETS | OFFSETS ARE USED TO ADJUST OR CORRECT THERMISTOR READINGS<br>CORRECTED VALUES MAY BE VIEWED THROUGH THE CUSTOMER MENU | RETURN TO MENU<br>OFFSETS<br>RIGHT ZONE = -18°C<br>RIGHT EVAP = -17°C |
| SELF TEST | SELF TEST IS USED TO DIAGNOSE THE BOARD IF NO ERRORS ARE PRESENT<br>"NO ERRORS" WILL BE DISPLAYED, THE MAIN BOARD IS FUNCTIONING PROPERLY | RETURN TO MENU<br>SELF TEST<br>NO ERRORS |
| DIFFERENTIALS | DIFFERENTIALS ARE USED TO DETERMINE AT WHAT TEMPERATURE THE UNIT CYCLES. "O" SETTING IS +/- 2° DIFFERENTIAL | RETURN TO MENU<br>DIFFERENTIALS<br>LEFT = -16°C<br>RIGHT = -16°C |
| EVAP FAN | THIS MENU IS USED TO SET THE DURATION THE EVAPORATOR FAN WILL RUN AFTER THE COMPRESSOR CYCLES OFF | RETURN TO MENU<br>EVAP FAN<br>EVAP FAN ON = 1<br>EVAP FAN OFF = 60 |
| MULLION | THIS MENU IS USED TO SET THE DURATION THE MULLION HEATER WILL BE ON AFTER THE COMPRESSOR CYCLES OFF | RETURN TO MENU<br>MULL<br>MULL ON=5<br>MULL OFF=30 |
| FACTORY DEFAULT | FACTORY DEFAULT IS USED TO RESTORE ALL SETTINGS TO THE FACTORY DEFAULT FOR THE SELECTED MODEL | RETURN TO MENU<br>FACTORY DEFAULT<br>RESTORE? |
| RE-SELECT MODEL # | RE-SELECT MODEL IS USED TO MODIFY THE MODEL INFORMATION CHANGING THE MODEL COMPLETELY REPROGRAMS AVAILABLE ZONES | RETURN TO MENU<br>RE-SELECT MODEL<br>3090WCWC |
| FACTORY Wi-Fi | THIS SETTING IS FOR FACTORY USE ONLY AND SHOULD REMAIN OFF | RETURN TO MENU<br>FACTORY Wi-Fi<br>OFF |
| SET POINTS | THE SET POINTS MENU IS USED TO MODIFY BOTH THE ZONE AND EVAP SET POINTS<br>THE EVAP SET POINT IS USED DURING DEFROST, IT MUST REACH 42°F (6°C) | RETURN TO MENU<br>SET POINTS<br>LEFT ZONE = 12°C<br>LEFT EVAP = 7°C |
| FAN DELAY | FAN DELAY ALLOWS MODIFICATION OF FAN RUN TIMES BOTH AT THE START OF A COOLING CYCLE AND AT THE END AFTER THE COMPRESSOR STOPS | RETURN TO MENU<br>FAN DELAY<br>FAN 1 DELAY OFF = 1<br>FAN 2 DELAY ON = 2 |
| SHOWROOM MODE | RANDOMLY SCROLLS THROUGH ZONES, MODES, TEMPERATURES AND OTHER FEATURES. TOUCH AND HOLD TO EXIT SHOWROOM MODE | RETURN TO MENU<br>SHOWROOM MODE<br>OFF |
| EXIT | SCROLL DOWN TO "EXIT". TOUCH AND RELEASE TO EXIT SERVICE MODE | FAN DELAY<br>USB PORT<br>SHOWROOM MODE<br>EXIT |

## SERVICE MENU

In addition to a feature rich customer menu, the 3000 series also offers a service menu with the ability to fine tune and monitor unit operation.

To initiate the Service menu hold both ⌃ and ⌄ for 5 seconds.

### Actual Temps

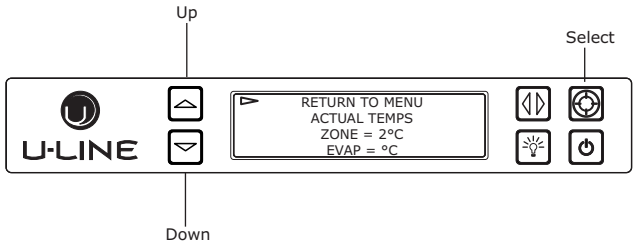


The Actual Temp option in the service menu will display raw thermistor readings without calculating offsets.

1. Press ⌄ to select “Actual Temps”.
2. Press ◎.
3. Use ⌃ and ⌄ to scroll through available thermistor readings.

To exit the Actual Temps menu press ⌃ to select “Return to Menu” and press ◎ to confirm.

### All Errors

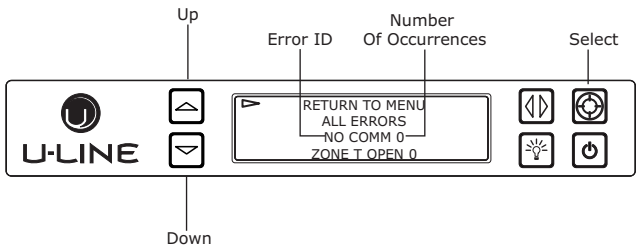


The All Errors option keeps record of any system errors. When an error occurs it is recorded to all errors. The number next to the error indicates the number of recorded instances. Errors in the log may not be currently active. The error log memory is non volatile and is persistent should power be lost and restored to the unit. See below for a list of logged errors and their respective descriptions.

| ID | Description | Solution |
|---|---|---|
| No Comm | Unit lost communication to the display. | Unplug the communication cable from the user interface. Check the black to red conductors looking for 5 VDC. If voltage is present replace the user interface. If no voltage is present check for 5 VDC at the main board where the communication cable plugs onto the pins for the red and black conductors. If 5 VDC is not present replace the main control board. If 5 VDC is present replace the communication cable. |
| Zone T Open | Zone thermistor circuit open. | Check thermistor connection to harness for moisture or corrosion. Also check connection where thermistor harness attaches to main board. If connections are valid replace the thermistor. |
| Evap T Open | Evaporator thermistor circuit open. | Check thermistor connection to harness for moisture or corrosion. Also check connection where thermistor harness attaches to main board. If connections are valid replace the thermistor. |
| Amb Thrm Open | Ambient thermistor circuit open. | Check thermistor connection to harness for moisture or corrosion. Also check connection where thermistor harness attaches to main board. If connections are valid replace the thermistor. |
| Zone T Short | Zone thermistor circuit shorted. | Check thermistor connection to harness for moisture or corrosion. Also check connection where thermistor harness attaches to main board. If connections are valid replace the thermistor. |
| Evap T Short | Evaporator thermistor circuit short. | Check thermistor connection to harness for moisture or corrosion. Also check connection where thermistor harness attaches to main board. If connections are valid replace the thermistor. |

| ID | Description | Solution |
|---|---|---|
| Amb Thrm Short | Ambient thermistor circuit shorted. | Check thermistor connection to harness for moisture or corrosion. Also check connection where thermistor harness attaches to main board. If connections are valid replace the thermistor. |
| Temp Hi 6H+ | Zone temperature +10°F over set point for over 6 hours. | Is condenser coil clean? Is condenser fan operating? Check zone thermistor for correct resistance. Verify thermistor connections are clean and intact. Check zone valve operation. Sealed system issue? |
| Temp Hi 12H+ | Zone temperature +10°F over set point for over 12 hours. | Is condenser coil clean? Is condenser fan operating? Check zone thermistor for correct resistance. Verify thermistor connections are clean and intact. Check zone valve operation. Sealed system issue? |
| Temp Lo 6H+ | Zone temperature -10°F under set point for over 6 hours. | Verify thermistor connections are clean and dry. Verify thermistor resistance. Verify correct operation of zone valve. |
| Temp Lo 12H+ | Zone temperature -10°F under set point for over 12 hours. | Verify thermistor connections are clean and dry. Verify thermistor resistance. Verify correct operation of zone valve. |
| Door Open 5M | Door switch open for more then 5 minutes. | Check door switch magnet reed switch alignment when door is in closed position. Check reed switch connection at the harness and the main board. |

To access All Errors follow the steps below.

1. Press ▽ to select “All Errors”.
2. Press ◎.
3. Press △ and ▽ to scroll through available information.

To clear the error log press ▽ to select “Clear Errors” and press ◎ to confirm.

To exit the Actual Temps menu press △ to select “Return to Menu” and press ◎ to confirm.

### Relay Status

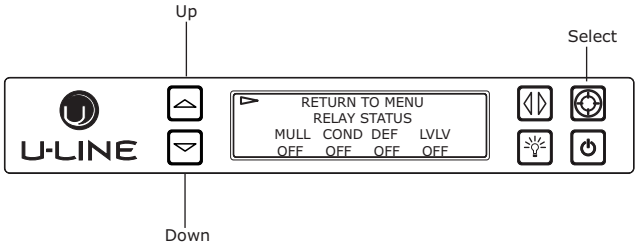


Relay status displays the current state of each relay. While all available relays are displayed, only a portion are used.

| ID | Description | Availability |
|---|---|---|
| Mull | Mullion Heater | Not Used |
| Cond | Condenser Fan | Not Used |
| Def | Defrost Valve | Not Used |
| Pan | Pan heater | Not Used |
| Comp | Compressor | Used |

NOTE: The Cond (Condenser Fan) will switch state with the compressor relay, however the condenser fan is actually powered through a DC output. Condenser fan status can be viewed through the “Output” service menu option.

### To access Relay Status

1. Use ▽ to select “Relay Status”.
2. Press ◎.
3. Press △ and ▽ to scroll through available information.

To exit the Relay Status simply press ◎ to exit.

### Relay Toggle

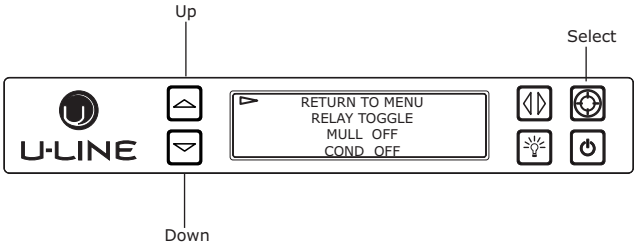


Relay toggle is used to manually switch the state of each relay to test for proper operation. In addition to the AC relays, DC switches may also be toggled. Relay toggle can also be used to force the unit into a particular state.

| ID | Description | Voltage |
|---|---|---|
| Mull | Mullion Heater (Not Used) | AC |
| Cond | Fan (Not Used) | AC |
| Def | Defrost Valve (45cm models) | AC |
| Pan | Pan heater (Not Used) | AC |
| Comp | Compressor | AC |
| F1 | Evaporator Fan | DC |
| F3 | Condenser Fan | DC |
| L1 | Zone Lighting | DC |

### To access Relay Toggle

4. Press ▽ to select “Relay Toggle”.

5. Press ◎.

6. Press △ and ▽ to scroll through each relay and DC output.

7. Press ◎ to toggle.

To exit the Relay Toggle menu press △ to select “Return to Menu” and press ◎ to confirm.

### Input Status

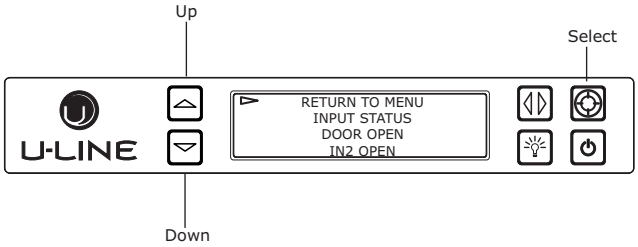


Input status displays the current state of each available input.

| ID | Description | State |
|---|---|---|
| Door | Door Switch | Open - Closed |

### To access Input Status

1. Press ▽ to select “Input Status”.

2. Press ◎.

3. Press △ and ▽ to scroll through available information.

To exit the Input Status menu press △ to select “Return to Menu” and press ◎ to confirm outputs.

### Outputs

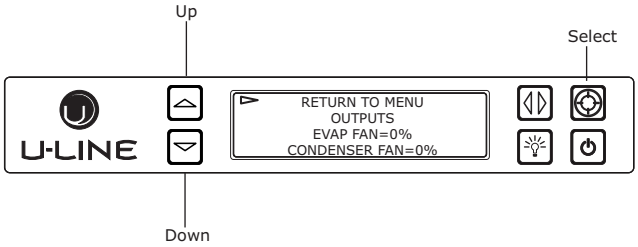


Outputs is used to monitor the state of DC outputs.

| ID | Description | Value |
|---|---|---|
| Evap Fan | Evaporator Fan | 0 or 100% |
| Condenser Fan | Condenser Fan | 0 or 100% |
| Light | Zone Lighting | Off - Low - Med - High |

**To access Outputs**

1. Press ▽ to select “Outputs”.
2. Press ◎.
3. Press △ and ▽ to scroll through available information.

To exit the Input Status menu, press △ to select “Return to Menu” and press ◎ to confirm.

**Offsets**

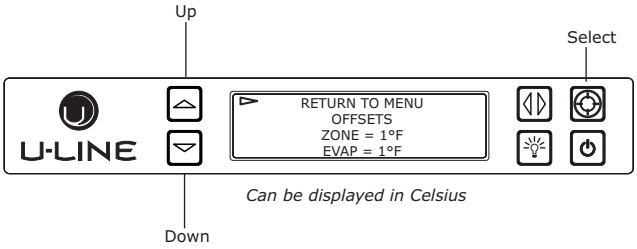


*Can be displayed in Celsius*

**NOTICE**

**Customer care MUST be notified and approve of any changes to the differential before they are made. Failure to notify customer care will void the warranty.**

Offsets are used to adjust or correct thermistor readings. Offset values are added to the current thermistor reading and are then used by the control board to determine cooling and defrost cycle times. Offsets have a range of +/- 10°F. Corrected values may be viewed through the customer “All Temps” menu.

**To access Offsets**

1. Press ▽ to select “Offsets”.
2. Press ◎.
3. Press △ and ▽ to scroll through available thermistors.

**To change offsets**

4. Press ◎, the selected thermistor will begin to flash.
5. Press △ or ▽ to modify offset value.
6. Press ◎ to confirm setting.

To exit the Offset menu, press △ to select “Return to Menu” and press ◎ to confirm.

**Self Test**

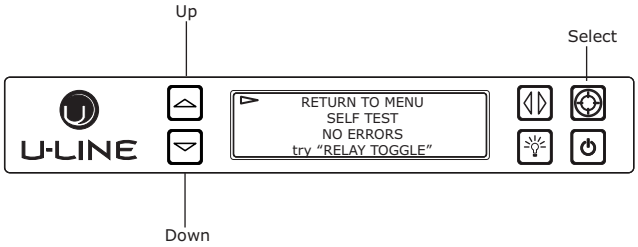


Self test is used to initiate a self diagnostic report. Any system faults will be displayed under Self test. If no errors are present “no errors” will be displayed and the main control board is functioning properly. The main control board is extremely robust and should rarely require service. Most issues are external to the control. Reference troubleshooting for more information.

**To access Self Test**

1. Press ▽ to select “Self Test”.
2. Press ◎.
3. Press △ and ▽ to scroll through available information.

To exit the Self Test, Press △ to select “Return to Menu” and press ◎ to confirm.

**Differentials**

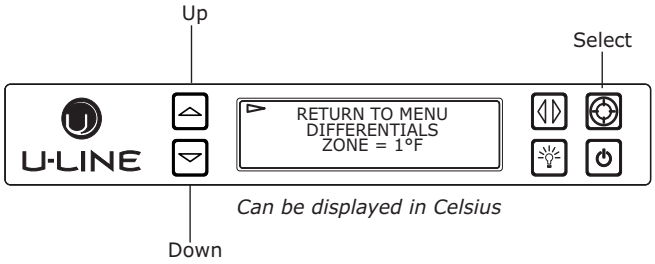


*Can be displayed in Celsius*

(DO NOT MAKE AN ADJUSTMENT TO THIS WITHOUT CONTACTING TECH LINE: 800-779-2955)

Differentials are used to determine the maximum variation from set point and have a range of 0 through 10. The table below shows the effect of differentials on cooling cycles with a set point of 45°F (7°C).

NOTE: Air temperature does not reflect product temperatures.

| Differential | Cycle Start °F (°C) | Cycle End °F (°C) |
|---|---|---|
| 0 | 45° (7°) | 43° (6°) |
| 1 | 46° (8°) | 43° (6°) |
| 2 | 47° (8°) | 41° (5°) |
| 3 | 48° (9°) | 41° (5°) |
| 4 | 49° (10°) | 39° (4°) |
| 5 | 50° (10°) | 37° (3°) |

The graph below shows a unit's cooling cycle over time with various differentials.

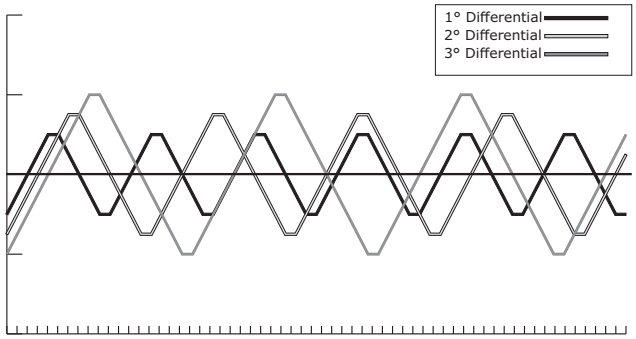


**Evap Fan**

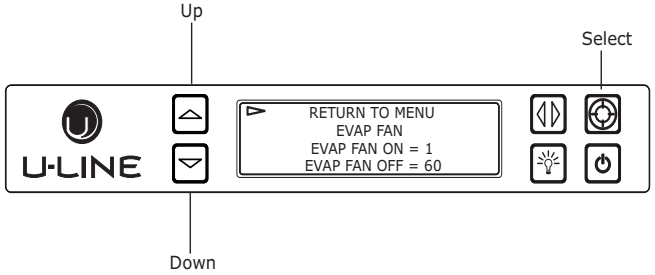


The Evap Fan option in the service menu allows servicers to change the Evaporator Fan runtime (in minutes) from 0 to 98 and OFF cycle time 0 to 98.

**To access Evap Fan**

1. Press ▽ to select "Evap Fan".

2. Press ◎.

3. Press △ and ▽ to scroll through available settings.

To exit the Evap Fan menu, press △ to select "Return to Menu" and press ◎ to confirm.

**Mullion**

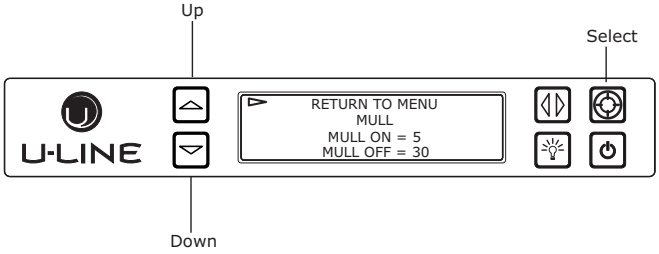


The MULL option in the service menu allows servicers to change the ON/OFF time in minutes of the mullion heater (DWR only) from 0 to 98.

**To access Mullion**

1. Press ▽ to select "MULL".

2. Press ◎.

3. Press △ and ▽ to scroll through available settings.

**Factory Default**

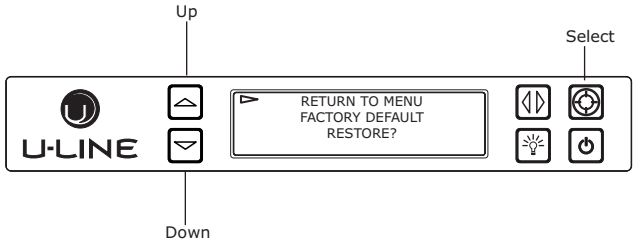


Factory Default will restore all settings to their factory default.

**To access Factory Default**

1. Press ▽ to select “Factory Default”.
2. Press ◎.

**To restore settings to their factory default.**

3. Press ▽ to select “Restore?” and press ◎
4. “Restore?” will change to “Restoring...” while settings are restored. When restoration is complete, “Restoring...” will return to “Restore?”.

To exit Factory Default, press △ to select “Return to Menu” and press ◎ to confirm.

**Re-Select Model**

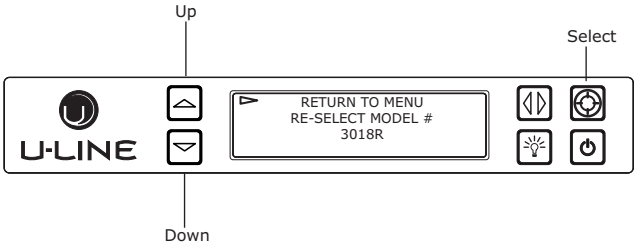


**NOTICE**

**Before altering model selection U-Line customer service must be notified. Failure to notify customer service will result in voiding of the manufacturer warranty.**

Re-Select Model allows the units model information to be modified. Changing the units model completely reprograms available zones, relay assignments, DC output assignments etc.

**To access Re-Select Model**

1. Press ▽ to select “Re-Select Model”.
2. Press ◎.

**To change model setting**

3. Press ▽ to select “Model=” and press ◎. “Model” will begin to flash.
4. Press △ or ▽ to scroll through each available model.
5. Press ◎ to confirm. While processing, the ▶ will momentarily change to ✳ .

To exit Re-Select Model, press △ to select “Return to Menu” and press ◎ to confirm. (Power cycling unit is recommended after re-selecting model.)

**Factory Wi-Fi**

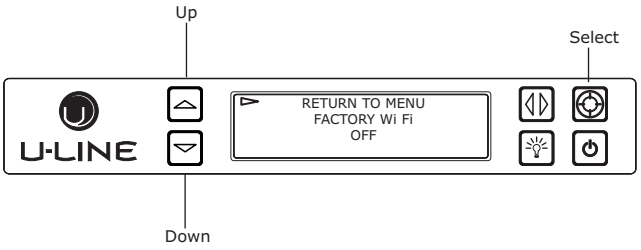


The Factory Wi-Fi option is only used in manufacturing and should always be OFF.

1. Press ▽ to select “Factory Wi-Fi”.
2. Press ◎.
3. Press △ or ▽ select “OFF”.

To exit the Factory Wi-Fi menu press △ to select “Return to Menu” and press ◎ to confirm outputs.

**Set Points**

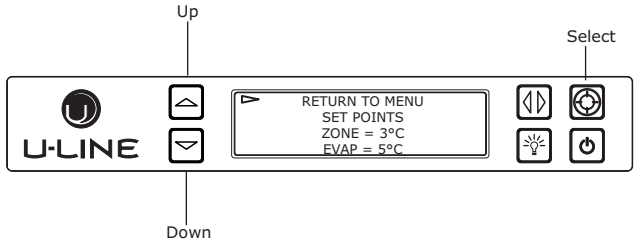


The Set points menu contains options to modify both the Zone and Evap set points. Changes to the zone set point will be reflected on the main screen. Changes to the evap set point alter the temperature the evaporator needs to meet during a defrost cycle.

**To access Set Points**

1. Press ▽ to select “Set Points”.
2. Press ◎.
3. Press △ and ▽ to scroll through available set points.

**To change set points**

4. Press ◎, the selected set point will begin to flash.
5. Press △ or ▽ to modify the value.
6. Press ◎ to confirm setting.

To exit the Set Points menu, press △ to select “Return to Menu” and press ◎ to confirm.

**Fan Delay**

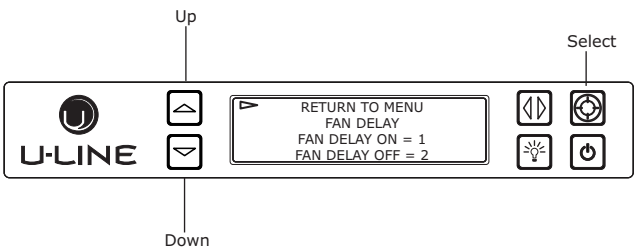


The Fan Delay menu option allows the modification of fan run times during and after a cooling cycle. In order to allow time for the evaporator to properly cool, the evaporator fan is delayed from starting with the cooling cycle for a given amount of time. In order to remove as much warmth as possible from the cabinet the evaporator fan will continue to run at the end of the cooling cycle for a given amount of time.

**Fan Delay On=**

“Fan Delay On” is the amount of time in minutes the fan will be delayed from starting from the beginning of a cooling cycle.

**Fan Delay Off=**

“Fan Delay Off” is the amount of time in minutes the fan will continue to run at the end of a cooling cycle.

**To access Fan Delay**

1. Press ▽ to select “Fan Delay”.
2. Press ◎.

**To change fan delay**

3. Press ▽ to select either “Fan Delay On” or “Fan Delay Off” and press ◎. The chosen option will begin to flash.
4. Press △ or ▽ to change settings.
5. Press ◎ to confirm.

To exit Fan Delay, press △ to select “Return to Menu” and press ◎ to confirm.

**Showroom Mode**

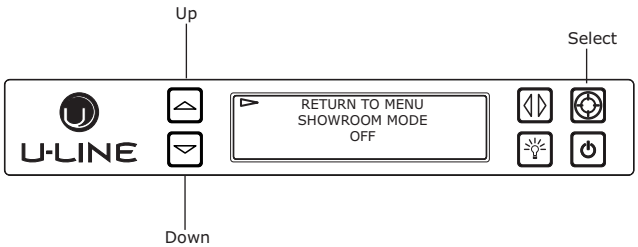


Showroom displays a number of features and allows the unit to be powered on without running the cooling system.

**To toggle showroom mode**

1. Press ▽ to select “Showroom Mode”.
2. Press ◎.
3. Press ▽ to select “Off” and press ◎. “Off” will begin to flash.
4. Press △ or ▽ to toggle between off and on.
5. Press ◎ to confirm.

If set to “on” showroom mode will begin immediately. To exit showroom mode press ⏻ and hold for 5 seconds and release. The display will show a countdown to switching the unit off. Press ⏻ again and the unit will immediately switch on retaining the presets from before it entered showroom mode.

To exit the showroom mode menu, press △ to select “Return to Menu” and press ◎ to confirm.

# Thermistors

Thermistors are used for various temperature readings. Thermistors provide reliable temperature readings using a resistance which varies based on surrounding temperatures. If a faulty thermistor is suspected it may be tested using an accurate ohmmeter.

All thermistors in the unit are identical. If a thermistor is suspected of being defective the resistance can be verified. Place the thermistor in an ice water bath, the resistance should read 16.1k OHMs +/-5% on your meter.

Thermistor connections must be kept clean. A thermistor connection that has become corroded can cause resistance values from the thermistor to change as they pass through a dirty connection to the board.

It is for that reason that we apply dielectric grease to all of our thermistor connections. Dielectric grease will help to keep thermistor connections clean and dry.

If you change a thermistor in the unit please re-apply dielectric grease to the connection. If you encounter a dirty thermistor connection, you should replace the thermistor and the thermistor harness.

Thermistor error information can be found in the Control Operations - Service section.

This unit has **three** thermistors.

**Thermistor one (Zone):**

Located along the right hand side wall. It is used to maintain the operating temperature within that zone.

**Thermistor two (Evaporator):**

Located on the evaporator. It is used for defrost.

**Thermistor three (Ambient):**

Located in the base of the unit (secured to the condenser). It is used to monitor the ambient temperature within the base compartment. It is used for diagnostics.

**THERMISTOR FAILURE**

**Zone Thermistors**

If a zone thermistor(s) in the unit fails the unit will continue to cool in a backup mode (Self Preservation Mode) to preserve the integrity of the contents. The unit will otherwise operate normally.

2000 Series Self Preservation Mode:
The unit will cycle on for 10 minutes then off for 40 minutes.

3000 Series Self Preservation Mode:
Cycle times determined by zone - see chart. The error will be displayed on the main display, “Self Test” and logged in “All Errors.”

Self Preservation Mode Data Table - 3000 Series

| Mode | ON | OFF |
|---|---|---|
| Beverage/Drinks | 10 | 45 |
| Market/Fresh | 10 | 45 |
| Root | 5 | 90 |
| Pantry | 10 | 45 |
| Deli | 10 | 45 |
| White Wine | 5 | 60 |
| Red Wine | 5 | 60 |
| Sparkling Wine | 10 | 60 |
| Polar | 55 | 5 |

**Evaporator Thermistors**

If an evaporator thermistor fails the unit will rely on a preset defrost timer during defrost cycles. The unit will otherwise operate normally. Refer to defrost section.

**Ambient Thermistor**

If the thermistor fails the unit will operate normally.

Thermistor Resistance Data

| Temp (F) | Temp (C) | Nominal Resistance (OHMS)* |
|---|---|---|
| -40 | -40 | 169157 |
| -31 | -35 | 121795 |
| -22 | -30 | 88766 |
| -13 | -25 | 65333 |
| -4 | -20 | 48614 |
| 5 | -15 | 36503 |
| 14 | -10 | 27681 |
| 23 | -5 | 21166 |
| 32 | 0 | 16330 |
| 41 | 5 | 12696 |
| 50 | 10 | 9951 |
| 59 | 15 | 7855 |
| 68 | 20 | 6246 |
| 77 | 25 | 5000 |
| 86 | 30 | 4029 |
| 95 | 35 | 3266 |
| 104 | 40 | 2665 |
| 113 | 45 | 2186 |
| 122 | 50 | 1803 |
| 131 | 55 | 1495 |
| 140 | 60 | 1247 |
| 149 | 65 | 1044 |
| 158 | 70 | 879 |
| 167 | 75 | 743 |
| 176 | 80 | 631 |

* (+/-5%)

# Defrost

The models below have automatic or frost free design and do not require manual defrosting under normal conditions.

| **Defrost Settings** | | | | |
|---|---|---|---|---|
| **Base Model** | **Variant(s)** | **Compressor Run Time Between Defrost (Hours)** | **Duration in Minutes (Maximum)** | **Stop Temperature °F (°C)** |
| 1224 | RF | 12 | 45 | 15 (-9) |
| 1215/1224/2218/2245/ 2224/2260 | WC, ZWC | 12 | 45 | 45 (7) |
| 1215/1224/2218/2245/ 2224/2260 | R, RSOD, RDC, BEV, DC, DWR, RGL | 12 | 45 | 42 (6) |
| CO29 | F | 12 | 18 | n/a |
| CO1224 | F | 12 | 18 | 45 (7) |
| 1224FZR | Freezer Mode | 6 | 45 | 42(6) |
| 1224FZR | Refrigerator Mode | 12 | 45 | 42(6) |

The defrost settings for 3000 series models are determined by zone.

| **Defrost Settings by Zone (3000 Series)** | | | | |
|---|---|---|---|---|
| **Zones** | **Compressor Run Time Between Defrost (Hours)** | **Duration in Minutes (Minimum)** | **Duration in Minutes (Maximum)** | **Stop Temperature °F (°C)** |
| Beverage/Drinks | 12 | 5 | 60 | 42 (6) |
| Market/Fresh | 12 | 5 | 60 | 42 (6) |
| Root/Root Cellar | 12 | 5 | 60 | 45 (7) |
| Pantry | 12 | 5 | 60 | 42 (6) |
| White Wine | 12 | 5 | 60 | 45 (7) |
| Red Wine | 12 | 5 | 60 | 45 (7) |
| Sparkling Wine | 12 | 5 | 60 | 45 (7) |
| Polar | 6 | 5 | 20 | 42 (6) |
| Deli | 12 | 5 | 60 | 42 (6) |

# Remove Fan and Cover

**CONVECTION COOLING**

This unit is equipped with an advanced convection cooling system. Convection cooling stabilizes cabinet temperature, cools product faster and increases energy efficiency.

**Evaporator Fan**

The evaporator fan is responsible for circulating warm air from the refrigeration zone, past the evaporator and back into the refrigerated zone.

The evaporator fan is factory set to have a 1 minute delay at the beginning of a cooling cycle. This delay gives the evaporator time to cool properly before warm air is passed over it. The fan will continue to run for an additional 2 minutes at the end of a cooling cycle. Fan delay times can be modified through the service menu.

Evaporator fan operation is also determined by door switch state. If the door switch circuit opens, the fan will stop. When the door switch circuit is closed the fan will either continue running with the cooling cycle, or if not currently cooling, the fan will run for 1 minute to circulate air and clear any condensation that may have appeared on glass doors and shelves.

*Note:* If the unit is set to sabbath mode, the evaporator fan will no longer respond to the state of the door switch.

In order to operate efficiently, the evaporator fan blade and vents should be unobstructed and free of any dust buildup.

**Evaporator Fan Replacement**

Should the evaporator fan need to be replaced follow the steps below.

1. Remove any product from the unit.
2. Uninstall unit.
3. Disconnect power to the unit.
4. Remove rear cover from unit.
5. Disconnect fan electrical connection.
6. Remove insulating foam from refrigerant line pass-through hole as needed to gain clearance for fan plug.
7. Remove internal bins and bin holders from slide assemblies.
8. Remove the mounting screws from the rear only of the slid assemblies. The slides can pivot down from the front mounting screws providing ample space to remove evaporator cover.
9. Remove thermistor cover.
10. Remove two evaporator cover screws from top of evaporator cover.

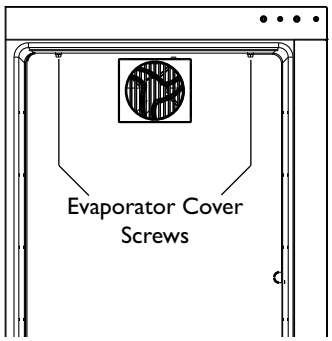

11. Grasp evaporator cover, pull the top forward and up as bottom of cover is installed behind the front edge of the drain trough.

12. While pulling the evaporator cover clear of the unit, it may be necessary to use your free hand to manipulate the fan plug end through the pass-through hole.

13. Remove the 4 screws mounting the fan shroud to the evaporator plate.

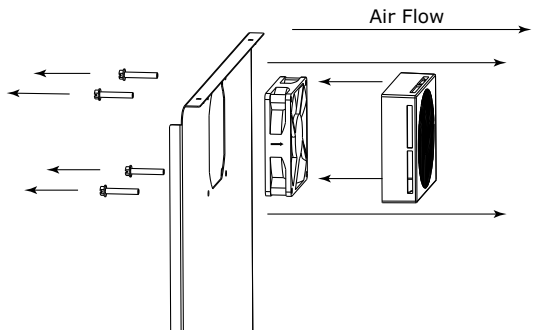


14. Remove and replace fan. Take special care to properly route fan wire.

**NOTICE**

**Fan must be oriented to pull air in through lower evaporator cover vents and push air out at fan mounting location.**

15. Installation is the reverse of removal.

16. Care must be taken to assure the bottom of the evaporator cover is reinstalled behind the front edge of the drain trough.

17. Use sealant gum to seal any openings at the rear of the unit before replacing rear cover.

18. Reinstall unit taking care to level, space and secure as found.