INSTALLATION INSTRUCTIONS

DCS Surround Kit

RF201ACJSX and RF201ACUSX models

US CA

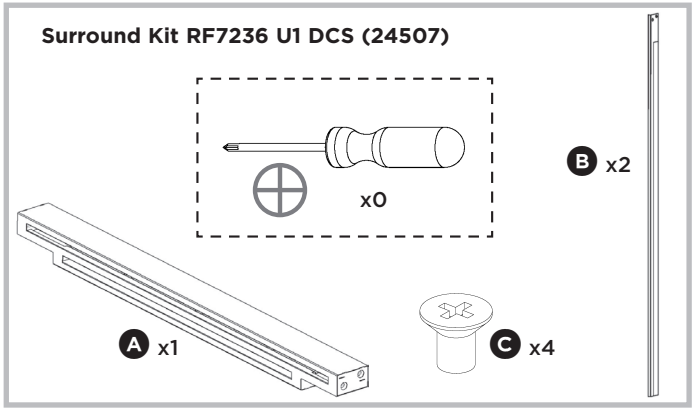

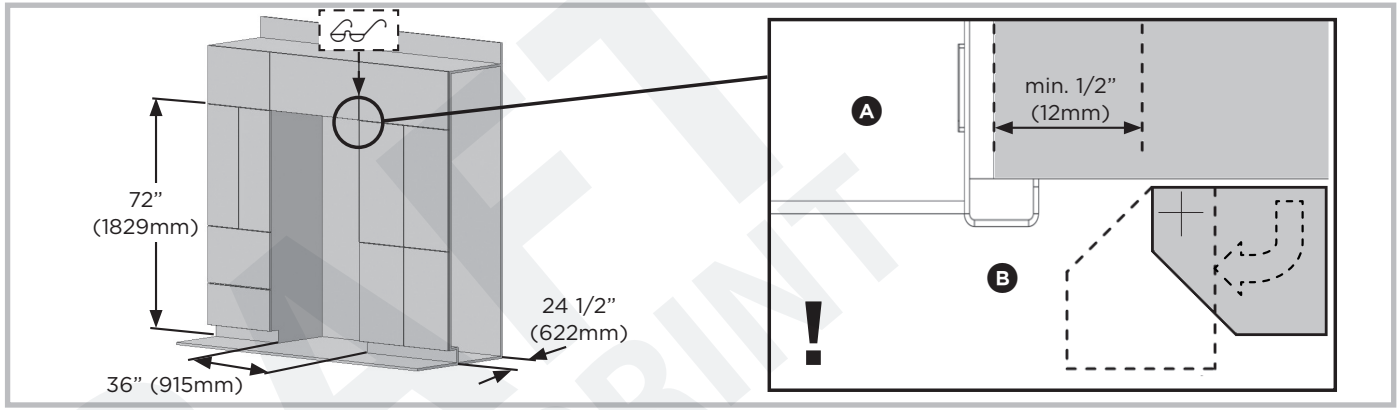

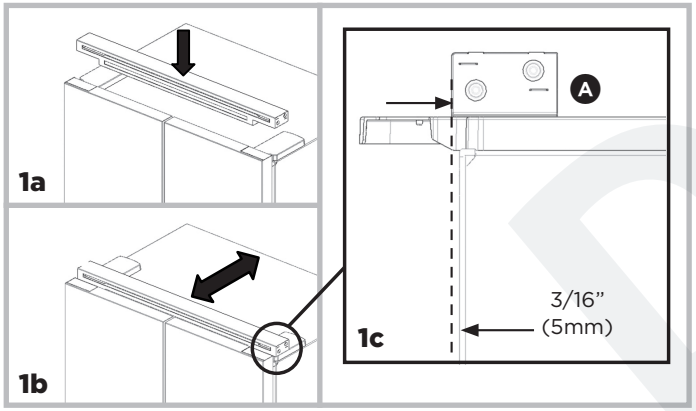

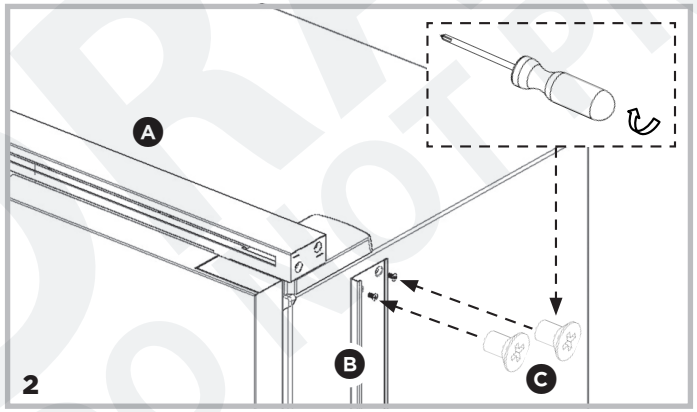

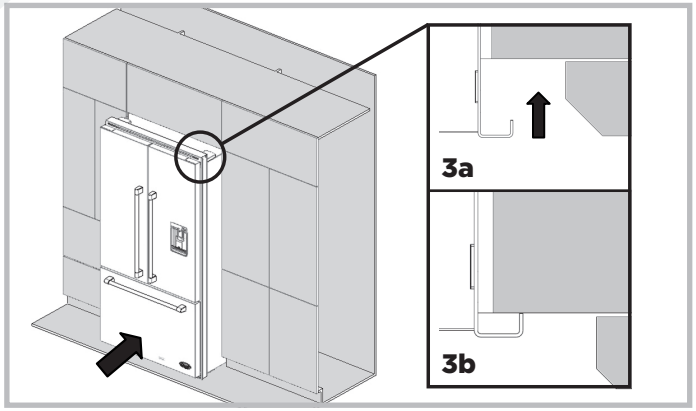

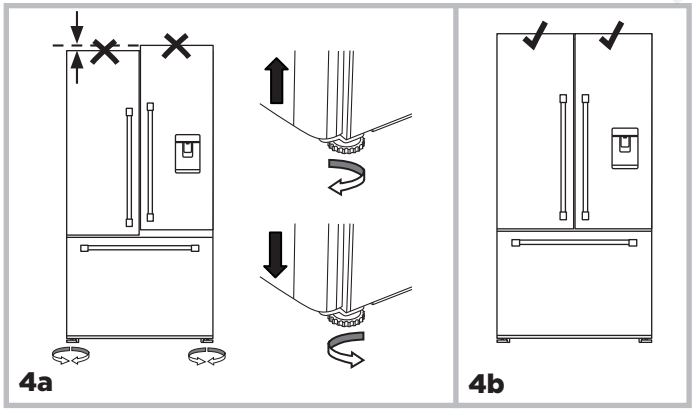

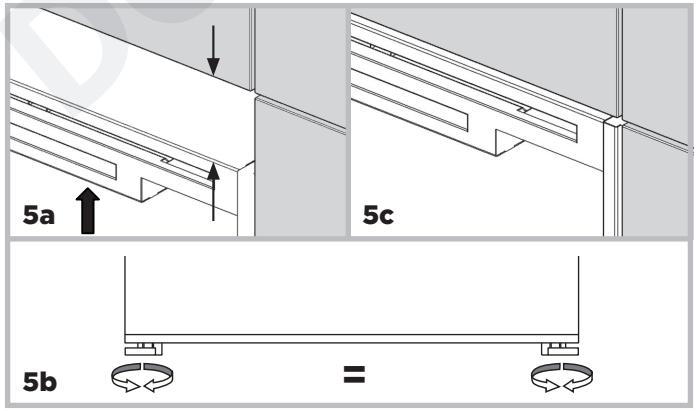

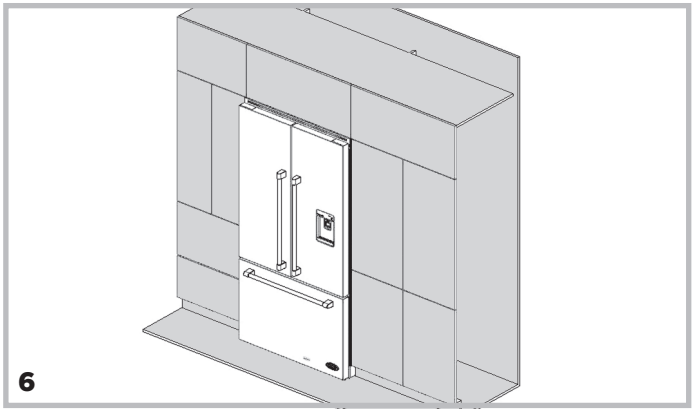

DRAFT DO NOT PRINT