Data sheet

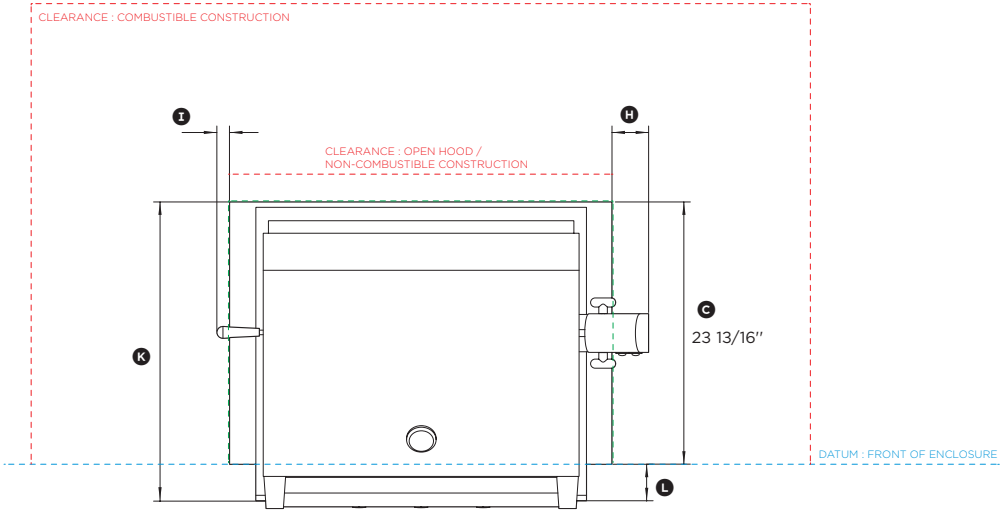

PLAN VIEW

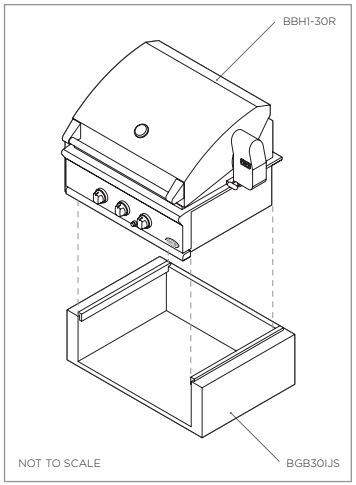

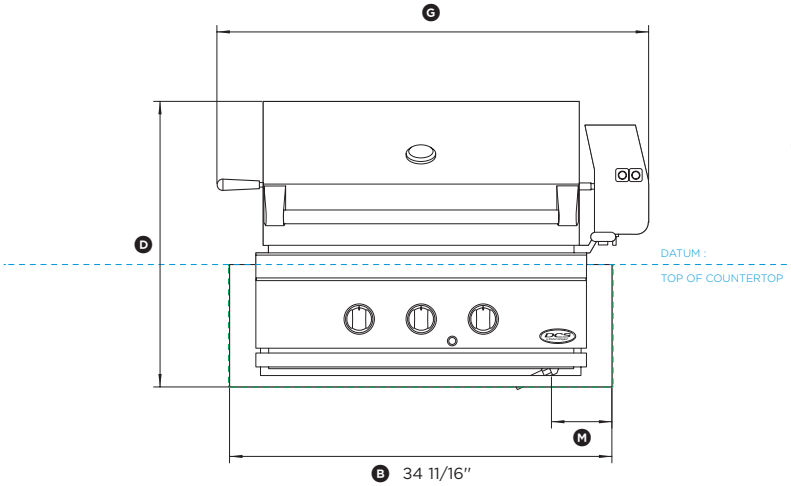

FRONT VIEW

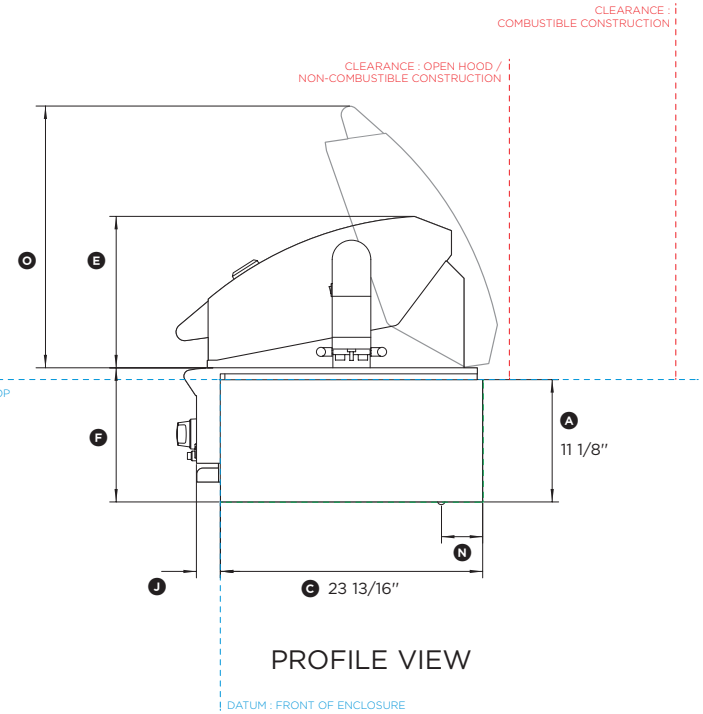

PROFILE VIEW

0 5 10 20 inches

30″ Outdoor Grill with Insulation Jacket

Model no:

BH1-30R with BGB30IJS

(refer page 2 for metric measurements)

Dimensions	**in**
Ⓐ Height of insulation jacket	11 1/8″
Ⓑ Overall width of insulation jacket	34 11/16″
Ⓒ Depth from front datum to rear of insulation jacket	23 13/16″
Ⓓ Overall height of grill with insulation jacket	25 15/16″
Ⓔ Height from top of hood to top of chassis	13 3/4″
Ⓕ Height from top of chassis to bottom of insulation jacket	12 3/16″
Ⓖ Overall width of grill with insulation jacket	39 1/8″
Ⓗ Width from right side of jacket to right side of motor cover	3 5/16″
Ⓘ Width from left side of jacket to end of skewer handle	1 1/8″
Ⓙ Depth from control panel to front datum	2 3/16″
Ⓚ Overall depth of grill with insulation jacket (excluding handle and dials)	27 1/16″
Ⓛ Depth from front of product to front datum (excluding handle and dials)	3 3/8″
Ⓜ DIstance from gas inlet to right side of insulation jacket	5 1/2″
Ⓝ Distance from gas inlet to rear of insulation jacket	3 3/4″
Ⓞ Height from top of open hood to top of chassis	24 5/8″

Minimum Clearances	**in**
Overall width of cavity	34 7/8″
Overall depth of cavity	23 3/4″
Overall height of cavity	11 1/8″
Clearance for open hood / non-combustible construction	3″
Clearance to adjacent vertical combustible construction from sides and rear of grill above countertop level	18″

INDICATES CUTOUT
INDICATES PRODUCT DATUM
INDICATES CLEARANCES

DATE: **15.01.2016**

IMPORTANT NOTE: Throughout this guide, dimensions may vary by ±2mm (3/32″). Please read the installation manual for detailed information on installing the product. www.dcsappliances.com

DCS by Fisher&Paykel

Data sheet

30″ Outdoor Grill with Insulation Jacket

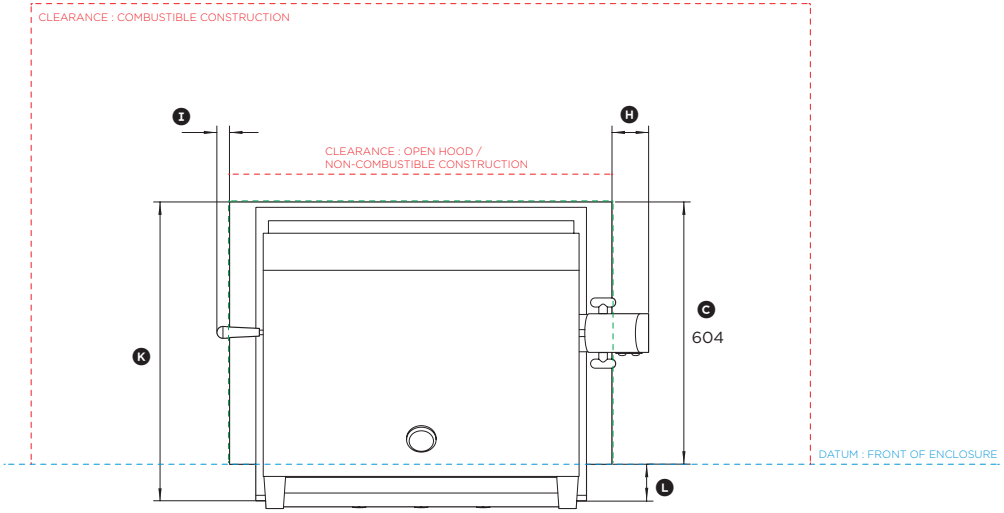

PLAN VIEW

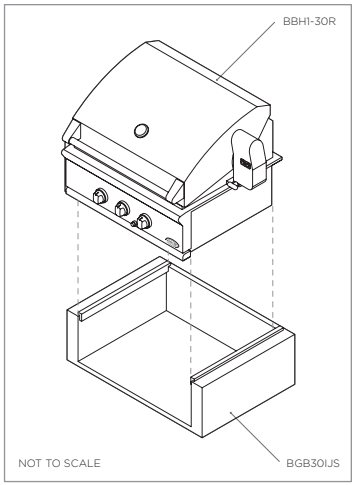

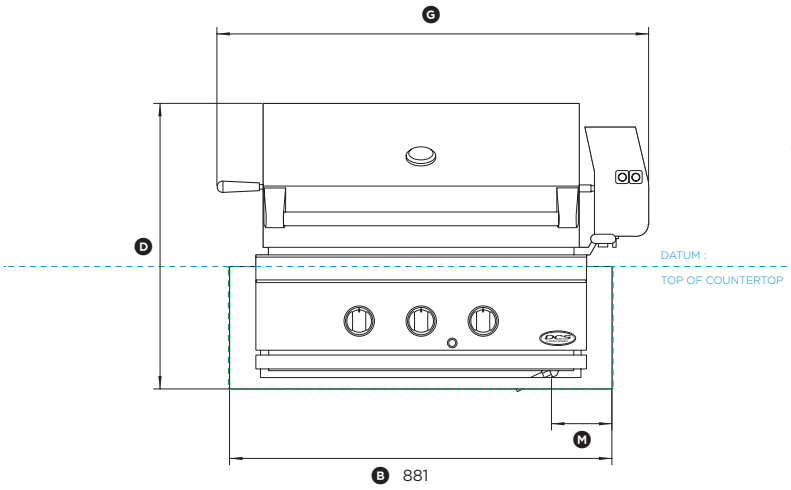

FRONT VIEW

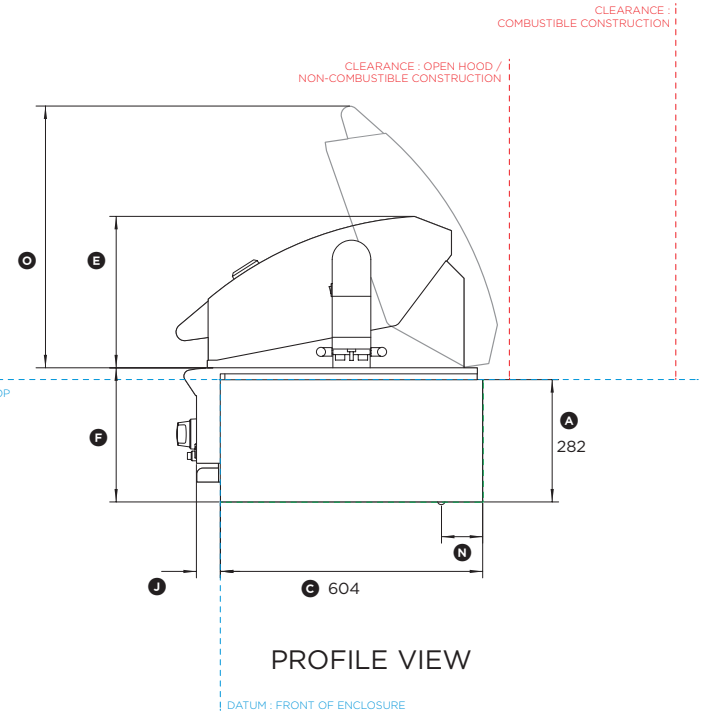

PROFILE VIEW

0 100 200 400 millimetres

Model no:

BH1-30R with BGB30IJS

(refer page 1 for imperial measurements)

Dimensions	**mm**
Ⓐ Height of insulation jacket	282
Ⓑ Overall width of insulation jacket	881
Ⓒ Depth from front datum to rear of insulation jacket	604
Ⓓ Overall height of grill with insulation jacket	658
Ⓔ Height from top of hood to top of chassis	349
Ⓕ Height from top of chassis to bottom of insulation jacket	309
Ⓖ Overall width of grill with insulation jacket	995
Ⓗ Width from right side of jacket to right side of motor cover	85
Ⓘ Width from left side of jacket to end of skewer handle	29
Ⓙ Depth from control panel to front datum	55
Ⓚ Overall depth of grill with insulation jacket (excluding handle and dials)	688
Ⓛ Depth from front of product to front datum (excluding handle and dials)	85
Ⓜ DIstance from gas inlet to right side of insulation jacket	139
Ⓝ Distance from gas inlet to rear of insulation jacket	95
Ⓞ Height from top of open hood to top of chassis	626

Minimum Clearances	**mm**
Overall width of cavity	886
Overall depth of cavity	603
Overall height of cavity	283
Clearance for open hood / non-combustible construction	76
Clearance to adjacent vertical combustible construction from sides and rear of grill above countertop level	457

INDICATES CUTOUT
INDICATES PRODUCT DATUM
INDICATES CLEARANCES

DATE: **15.01.2016**

IMPORTANT NOTE: Throughout this guide, dimensions may vary by ±2mm (3/32″). Please read the installation manual for detailed information on installing the product. www.dcsappliances.com

DCS by Fisher&Paykel