Alfresco™

Open Air Culinary Systems

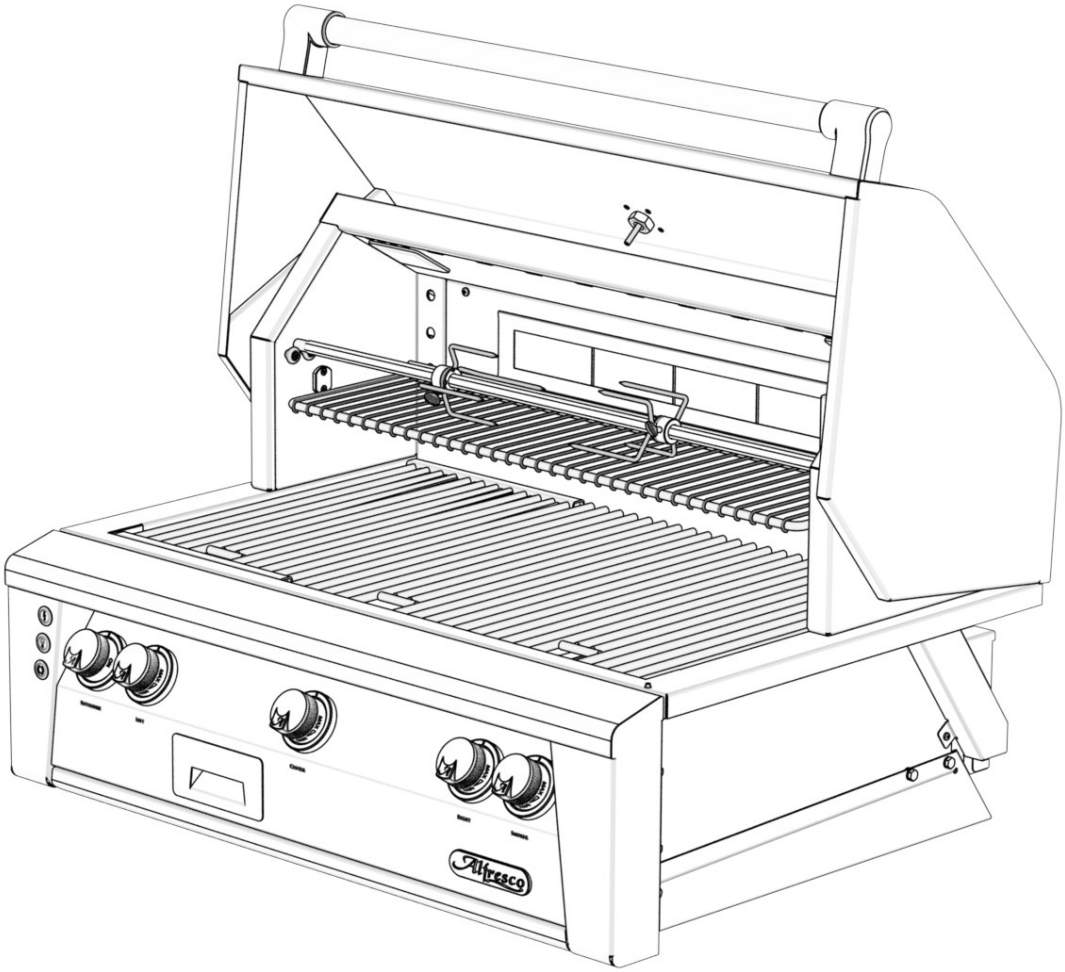

ALXE-36 & 36SZ Parts Manual

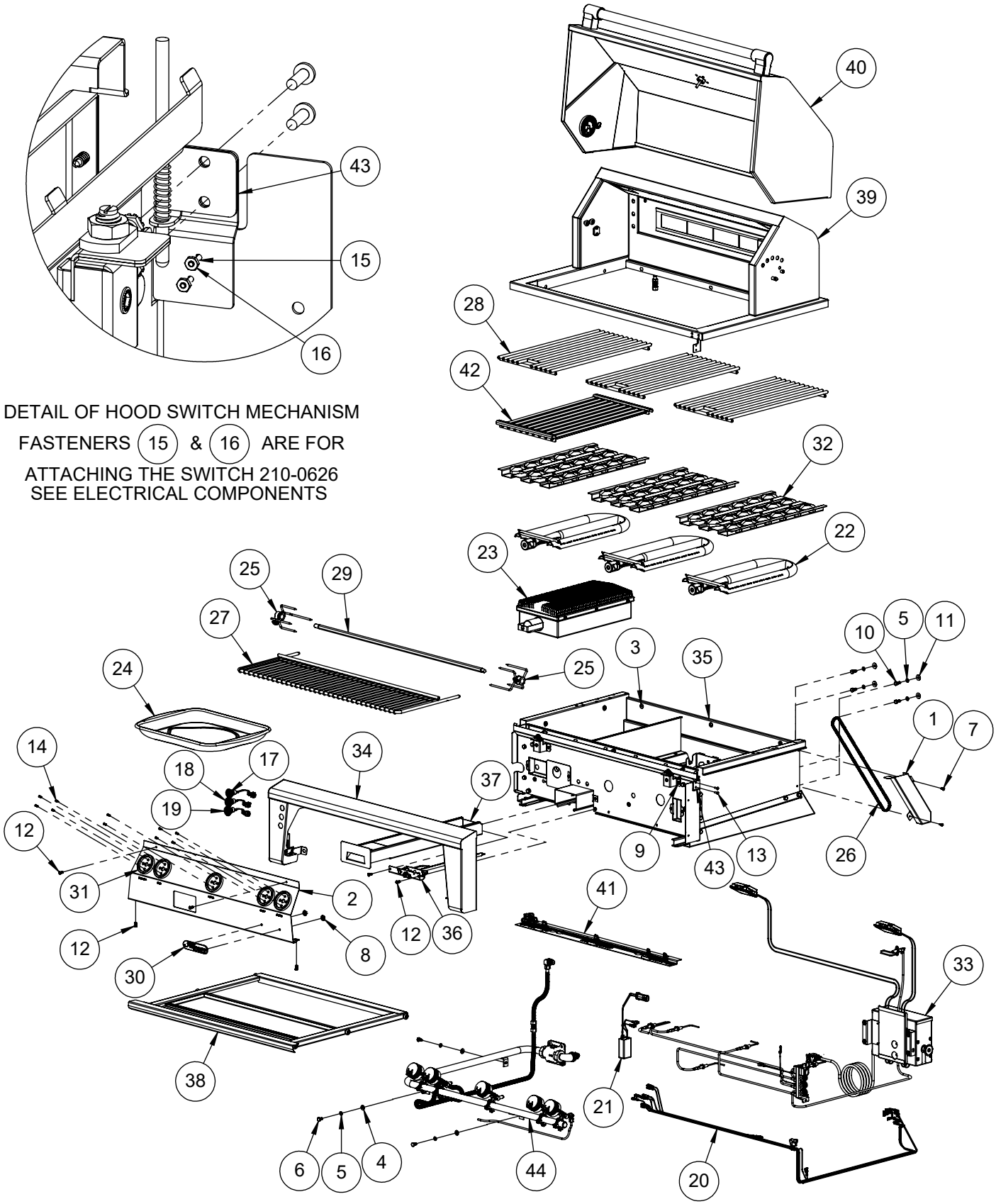

DETAIL OF HOOD SWITCH MECHANISM

FASTENERS (15) & (16) ARE FOR

ATTACHING THE SWITCH 210-0626
SEE ELECTRICAL COMPONENTS

NOTE:

SEARZONE™ BURNER (23) AND GRILL (42) USED ON ALXE-36SZ

OTHERWISE, ONLY BURNER (22), GRILL (28) AND BRIQUETTE (32) USED ON ALXE-36

Alfresco™ SUPERIOR EQUIPMENT SOLUTIONS 7039 EAST SLAUSON AVENUE COMMERCE, CA. 90040	THE INFORMATION CONTAINED IN THIS DRAWING IS THE SOLE PROPERTY OF SUPERIOR EQUIPMENT SOLUTIONS INC. ANY REPRODUCTION IN PART OR AS A WHOLE WITHOUT WRITTEN PERMISSION FROM SUPERIOR EQUIPMENT SOLUTIONS, INC. IS PROHIBITED.	PROJECT TITLE: **ALXE-36 AND 36SZ**	DRAWING NO.: **500-0159M**
			SHEET 1 OF 2
	DRAWN BY: N SILCOCK **CREATED:** 2/5/2016 12:38:01 PM	DRAWING TITLE: **ALXE-36 AND 36SZ BUILT-IN**	

ITEM	PART NUMBER	DESCRIPTION	QTY
1	100-1877	ALX2 - ROTISSERIE CHAIN COVER	1
2	130-3069	FRONT PANEL	1
3	200-0057	SCREW 1/4-20 X 1/2 - TRUSS HEAD - PHILLIPS	10
4	200-0074	FLAT WASHER 1/4 TYPE A NARROW	3
5	200-0087	WASHER - 1/4" SPRING LOCK- REGULAR - SS	11
6	200-0089	BOLT - HEX HEAD 1/4-20 x 1/2" L	7
7	200-0111	SCREW 8-18 X ½ - SELF TAP - 410 SS	2
8	200-0125	NUT THREAD CUTTER FOR 1/4" Ø STUD -SPEED NUT	2
9	200-0206	8-32 KEP NUT 18-8 STAINLESS	2
10	200-0219	HEX HD MACHINE SCREW 1/4-20 UNC X 5/8 LONG SS	4
11	200-0244	WASHER, FLAT 1/4 TYPE B - REGULAR, SS	4
12	200-0267	10-32 X 1/2 - PAN HEAD - PHILLIPS SCREW	6
13	200-0270	8-32 PAN HD X 1/2 PHILLIPS 18-8 SS	2
14	200-0348	Screw 6-32 x 3/8 Flat Head (82°) phillips - Thread Cutter - #2 Drive - SS 410	10
15	200-0362	18-8 SS PAN HEAD SCREW 2-56 X 3/8	2
16	200-0363	18-8 SS HEX NUT 2-56	2
17	210-0583	SWITCH - IGNITION - MOMENTARY [ON]/OFF	1
18	210-0584	SWITCH - LIGHT - LATCHING [ON/OFF]	1
19	210-0585	SWITCH - ROTISSERIE - LATCHING [ON/OFF]	1
20	210-0606	ALXE-36 WIRING HARNESS	1
21	210-0623	TRANSFORMER ASSY FOR ALXE	1
22	290-0038	BURNER - GRILL - "U" SHAPE	3
23	290-0052	ALFRESCO SEAR ZONE™ BURNER ASSEMBLY	1
24	290-0059	ROTISSERIE DRIP PAN	1
25	290-0096	FORK ASSEMBLY	2
26	290-0116	CHAIN - ANSI # 25 - ¼" PITCH - .13" Ø X 1/8" ROLLER	1
27	290-0347	ALX2-36 WARMING RACK - SS	1
28	290-0348	GRILL ALX2-36 BBQ - 10-7/16" WIDE - SS	3
29	290-0349	SPEAR - ROTISSERIE - ALX2-36	1
30	290-0377	ALFRESCO RANGE LOGO	1
31	290-0388	ALFRESCO RANGE KNOB - BEZEL RING	5
32	510-0677	ALXE-36 - BRIQUETTE TRAY ASSEMBLY	3
33	510-0678	ALX2-36 / 36SZ - ELECTRICAL COMPONENTS	1
34	510-0944	ALXE-36 FRONT PANEL PERIMETER (ANGLED)	1
35	510-0945	ALXE-36 - FIRE BOX ASSEMBLY	1
36	510-0947	ALXE-36 SMOKER BURNER ASSEMBLY	1
37	510-0949	ALXE-36 - SMOKER TRAY ASSEMBLY	1
38	510-0951	ALXE-36 GREASE TRAY ASSEMBLY	1
39	510-0954	ALXE-36 REAR HOOD & RIM ASSEMBLY	1
40	510-0960	FRONT HOOD ALXE-36	1
41	510-0962	ALXE-36 BULLNOSE LIGHT ASSEMBLY	1
42	510-0981	ALXE-36 - SEARZONE™ GRILL ASSEMBLY	1
43	510-1026	ALXE HOOD SWITCH MECHANISM	1
44	510-1038	ALXE-36 GAS MANIFOLD ASSEMBLY	1

THE INFORMATION CONTAINED IN THIS DRAWING IS THE SOLE PROPERTY OF SUPERIOR EQUIPMENT SOLUTIONS INC. ANY REPRODUCTION IN PART OR AS A WHOLE WITHOUT WRITTEN PERMISSION FROM SUPERIOR EQUIPMENT SOLUTIONS, INC. IS PROHIBITED.

NOTE:
UNIQUE PARTS USED ON ALXE-36 MODEL

4 6 8

UNIQUE PARTS USED ON ALXE-36SZ MODEL

5 7 9 12

ITEM 1 IS USED FOR "U" BURNERS ONLY
THEREFORE, ALXE-36SZ ONLY HAS TWO.

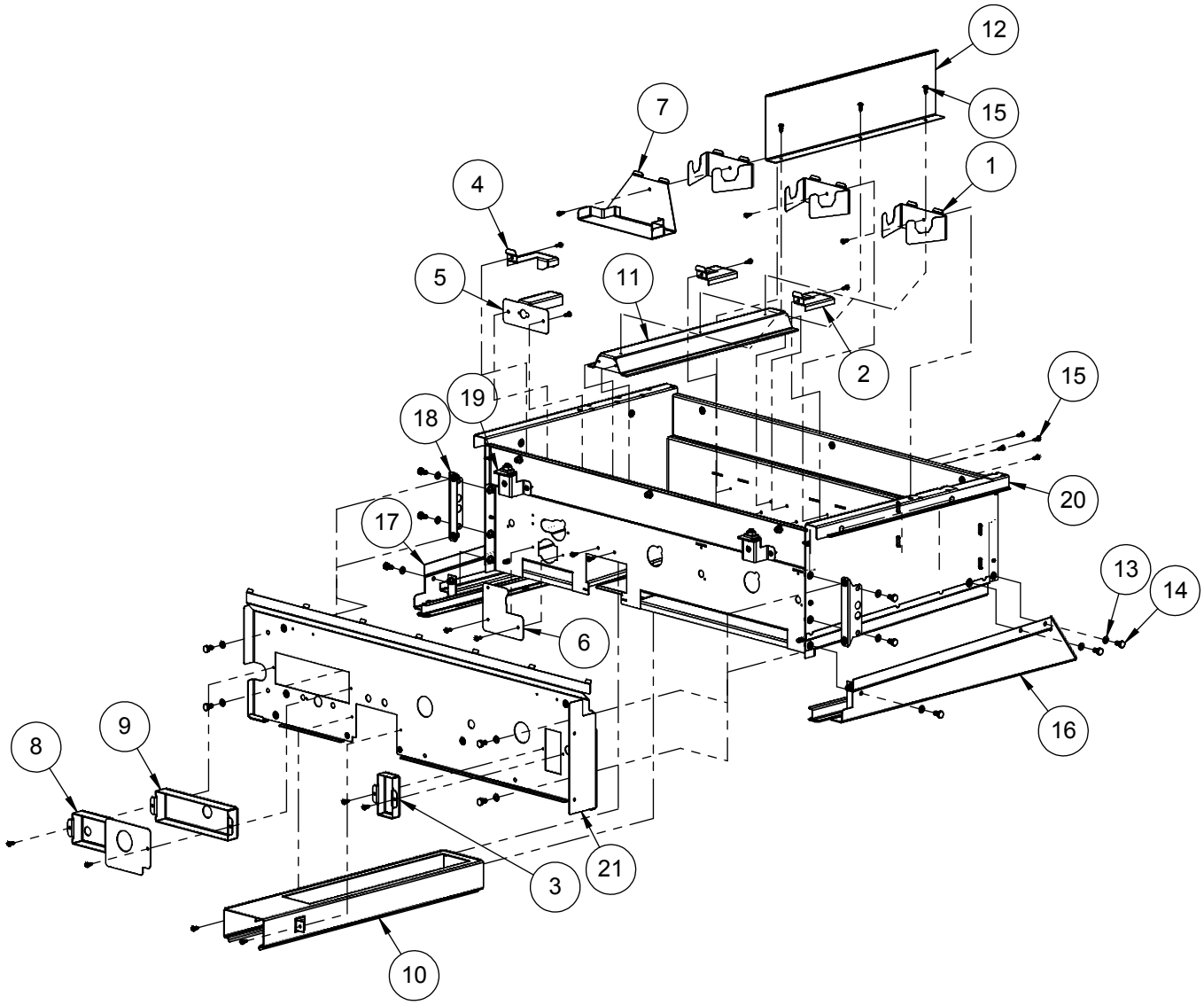

THE INFORMATION CONTAINED IN THIS DRAWING IS THE SOLE PROPERTY OF SUPERIOR EQUIPMENT SOLUTIONS INC. ANY REPRODUCTION IN PART OR AS A WHOLE WITHOUT WRITTEN PERMISSION FROM SUPERIOR EQUIPMENT SOLUTIONS, INC. IS PROHIBITED.

Alfresco™
SUPERIOR EQUIPMENT SOLUTIONS
7039 EAST SLAUSON AVENUE
COMMERCE, CA. 90040

DRAWN BY: N SILCOCK
CREATED: 2/8/2016 1:26:30 PM

PROJECT TITLE:
ALXE-36 AND 36SZ

DRAWING NO.: **510-0945M**

SHEET 1 OF 2

DRAWING TITLE:
ALXE-36 - FIRE BOX ASSEMBLY

ITEM	PART NUMBER	DESCRIPTION	QTY
1	100-1846	ALX2 - U-BURNER BRACKET	3
2	100-1848	ALX2 - IGNITER SHIELD	2
3	100-1888	ALX2 - SINGLE VALVE FIREWALL COVE	1
4	100-2202	ALX2-36 - IGNITER SHIELD - LEFT SIDE	1
5	100-2210	ALX2-36 - SEAR-ZONE IGNITER BRACKET / SHIELD	1
6	100-2211	ALX2-36 - SEARZONE™ OPENING FIREBOX COVER	1
7	100-2212	ALX2-36 - SEAR-ZONE™ BURNER BRACKET	1
8	100-2213	ALX2-36 - DUAL VALVE FIREWALL COVER FOR U-BURNER	1
9	100-2214	ALX2-36 - DUAL VALVE FIREWALL COVE	2
10	100-2632	ALXE-36 - SMOKER BOX BODY	1
11	100-2653	ALXE-36 SMOKER BOX TOP DIFUSSER	1
12	130-3042	ALX4 SEAR ZONE BURNER SHIELD	1
13	200-0087	WASHER - 1/4" SPRING LOCK- REGULAR - SS	17
14	200-0089	BOLT - HEX HEAD 1/4-20 x 1/2" L	17
15	200-0111	SCREW 8-18 X ½ - SELF TAP - 410 SS	29
16	510-0502	ALX2 - GREASE TRAY SUPPORT - RIGHT SIDE	1
17	510-0503	ALX2 - GREASE TRAY SUPPORT - LEFT SIDE	1
18	510-0520	ALX2 - FIREWALL SUPPORT BRACKET ASSEMBLY	2
19	510-0904	ALXE FRONT PANEL MNTG BRKT	2
20	510-0946	ALXE-36 FIREBOX - WELDED PARTS	1
21	510-0948	ALXE-36 FIREWALL ASSEMBLY	1

THE INFORMATION CONTAINED IN THIS DRAWING IS THE SOLE PROPERTY OF SUPERIOR EQUIPMENT SOLUTIONS INC. ANY REPRODUCTION IN PART OR AS A WHOLE WITHOUT WRITTEN PERMISSION FROM SUPERIOR EQUIPMENT SOLUTIONS, INC. IS PROHIBITED.

DRAWN BY: N SILCOCK
CREATED: 2/8/2016 1:26:30 PM

PROJECT TITLE:
ALXE-36 AND 36SZ

DRAWING TITLE:

DRAWING NO.: **510-0945M**

SHEET 2 OF 2

ITEM	PART NUMBER	DESCRIPTION	QTY
1	100-2642	ALXE-36 GREASE TRAY INSERT	1
2	200-0148	SCREW 10-32 X 3/4" - FLAT HEAD - PHILLIPS - 82° - SS	6
3	290-0119	ROLLER WHEEL - STAINLESS STL - ¾" Ø -	6
4	510-0952	ALXE-36 GREASE TRAY - WELDED PARTS	1

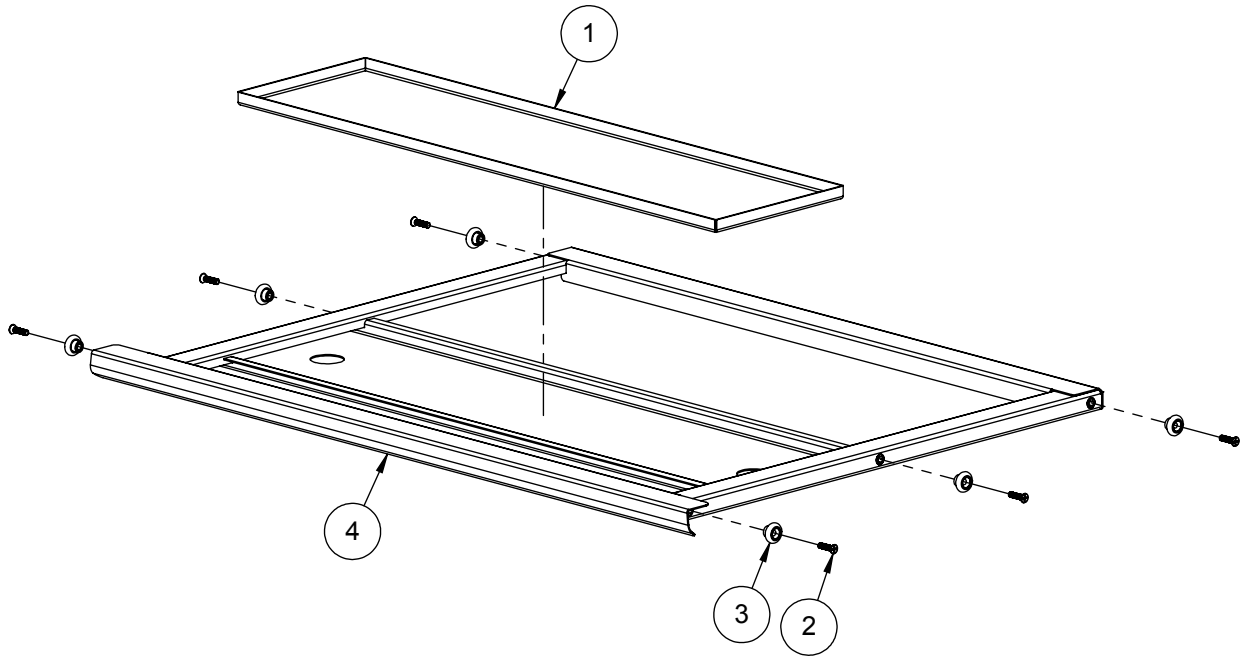

Alfresco™
SUPERIOR EQUIPMENT SOLUTIONS
7039 EAST SLAUSON AVENUE
COMMERCE, CA. 90040

THE INFORMATION CONTAINED IN THIS DRAWING IS THE SOLE PROPERTY OF SUPERIOR EQUIPMENT SOLUTIONS INC. ANY REPRODUCTION IN PART OR AS A WHOLE WITHOUT WRITTEN PERMISSION FROM SUPERIOR EQUIPMENT SOLUTIONS, INC. IS PROHIBITED.

DRAWN BY: N SILCOCK
CREATED: 2/9/2016 8:38:34 AM

PROJECT TITLE:
ALXE-36 AND 36SZ

DRAWING NO.: **510-0951M**
SHEET 1 OF 1

DRAWING TITLE:
ALXE-36 GREASE TRAY ASSEMBLY

ITEM	PART NO.	DESCRIPTION	QTY
1	100-1092	ALX2 - ROTISSERIE GEAR COVER	1
2	130-2985	PIVOT PIN	2
3	200-0057	SCREW 1/4-20 X 1/2 - TRUSS HEAD - PHILLIPS	2
4	200-0062	10-32 X 3/4 - PAN HEAD - PHILLIPS SCREW	2
5	200-0087	WASHER - 1/4" SPRING LOCK- REGULAR - SS	4
6	200-0089	BOLT - HEX HEAD 1/4-20 x 1/2" L	4
7	200-0111	SCREW 8-18 X ½ - SELF TAP - 410 SS	1
8	200-0148	SCREW 10-32 X 3/4" - FLAT HEAD - PHILLIPS - 82° - SS	2
9	200-0361	SCREW 8-32 X 5/8" - FLAT HEAD 82° - PHILLIPS	4
10	290-0119	ROLLER WHEEL - STAINLESS STL - ¾" Ø -	2
11	510-0139	ALX2 - ROTISSERIE GEAR ASSEMBLY	1
12	510-0511	ALX2 - WARMING RACK BRACKET ASSEMBLY - LEFT SIDE	1
13	510-0519	ALX2 - WARMING RACK BRACKET ASSEMBLY- RIGHT SIDE	1
14	510-0673	ALXE-36 & 36SZ ROTISSERIE PANEL ASSY	1
15	510-0955	ALXE-36 - BACK HOOD AND RIM - WELDED PARTS	1

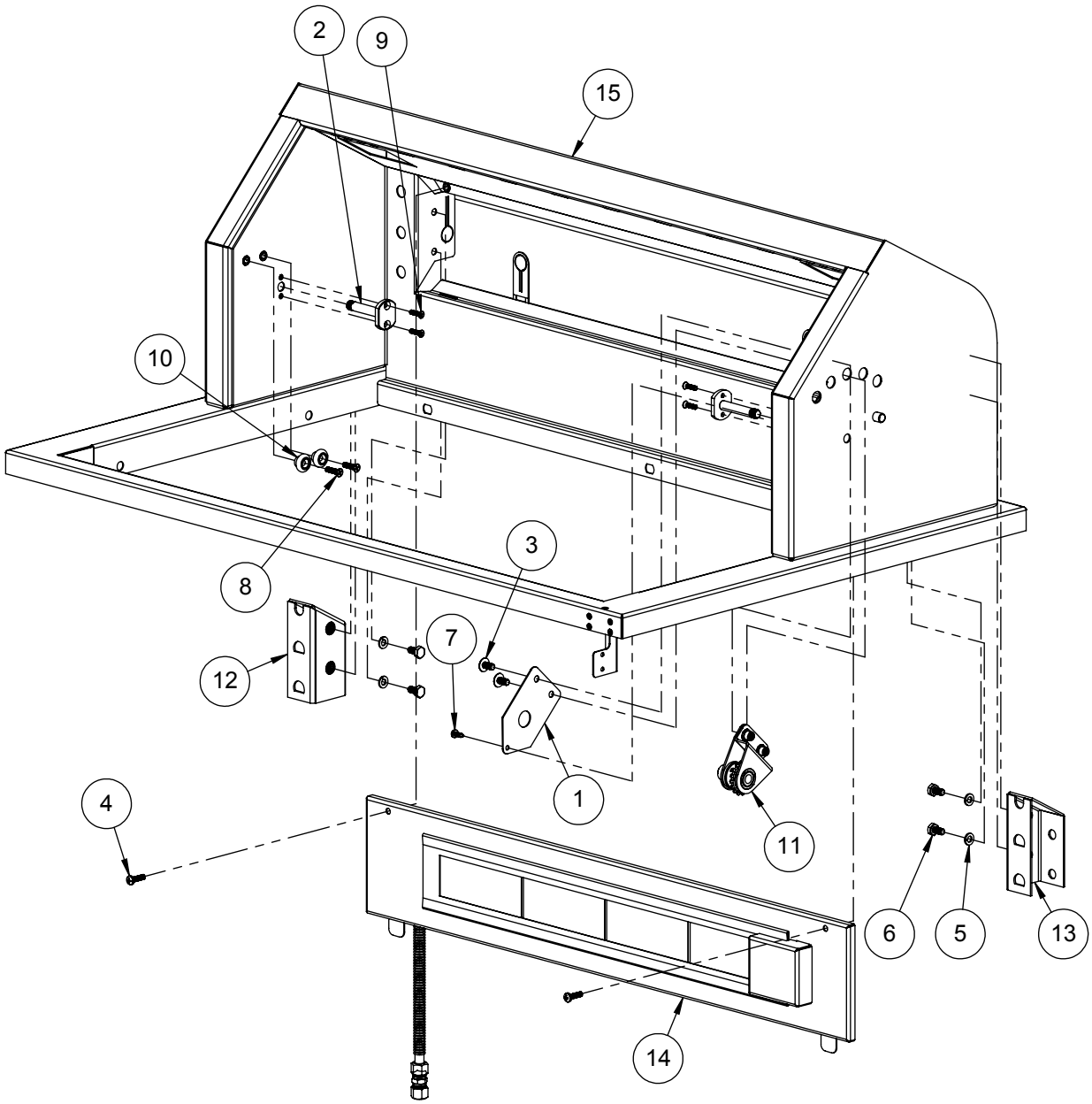

Alfresco™
SUPERIOR EQUIPMENT SOLUTIONS
7039 EAST SLAUSON AVENUE
COMMERCE, CA. 90040

THE INFORMATION CONTAINED IN THIS DRAWING IS THE SOLE PROPERTY OF SUPERIOR EQUIPMENT SOLUTIONS INC. ANY REPRODUCTION IN PART OR AS A WHOLE WITHOUT WRITTEN PERMISSION FROM SUPERIOR EQUIPMENT SOLUTIONS, INC. IS PROHIBITED.

DRAWN BY: N SILCOCK
CREATED: 2/10/2016 7:38:45 AM

PROJECT TITLE:
ALXE-36 AND 36SZ

DRAWING NO.: **510-0954M**
SHEET 1 OF 1

DRAWING TITLE:
ALXE-36 REAR HOOD & RIM ASSEMBLY

ITEM	PART NO.	DESCRIPTION	QTY
1	100-1226	ROTISSERIE ELECTRODE BRACKET	1
2	100-1882	ALX2 - ROTISSERIE ELECTRODE COVER	1
3	200-0111	SCREW 8-18 X ½ - SELF TAP - 410 SS	3
4	210-0240	ELECTRODE - DUAL TIP "L" SHAPE- ROTISSERIE	1
5	510-0469	ALX2 - ROTISSERIE PIPING SUBASSEMBLY	1
6	510-0674	ALX2-36 - ROTISSERIE PANEL - WELDED PARTS	1

ELECTRODE SHOWN FOR ASSEMBLY PURPOSE ONLY
REFER TO ASSEMBLY DRAWING 510-0678 FOR ALL
ELECTRICAL COMPONENTS

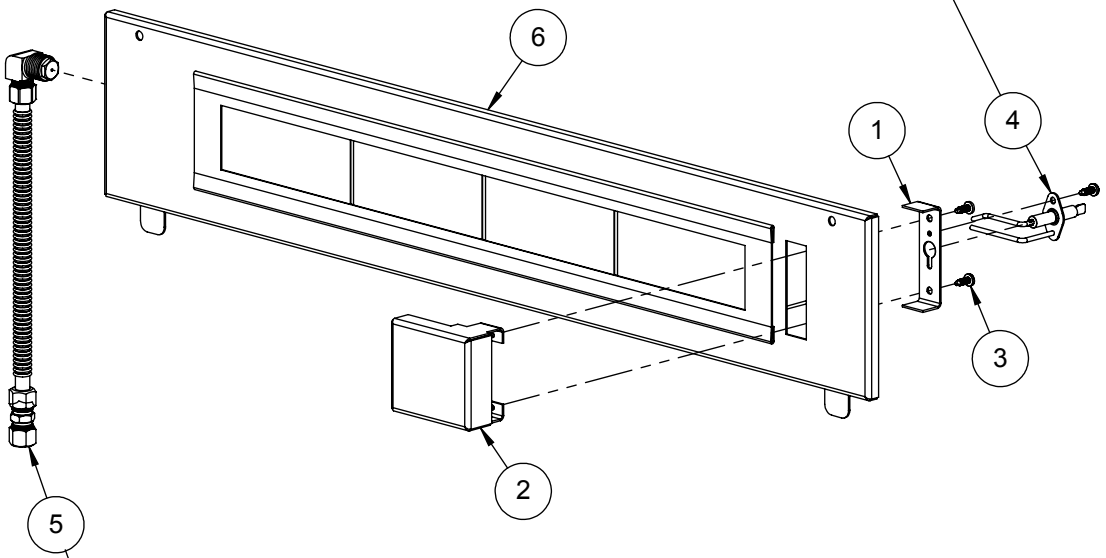

THESE PARTS ARE SHOWN FOR ASSEMBLY PURPOSES ONLY
REFER TO ASSEMBLY DRAWING 510-1038 FOR COMPLETE
PARTS BREAKDOWN AND ORIFICE INFORMATION

Alfresco™
SUPERIOR EQUIPMENT SOLUTIONS
7039 EAST SLAUSON AVENUE
COMMERCE, CA. 90040

THE INFORMATION CONTAINED IN THIS DRAWING IS THE SOLE PROPERTY OF SUPERIOR EQUIPMENT SOLUTIONS INC. ANY REPRODUCTION IN PART OR AS A WHOLE WITHOUT WRITTEN PERMISSION FROM SUPERIOR EQUIPMENT SOLUTIONS, INC. IS PROHIBITED.

DRAWN BY: N SILCOCK
CREATED: 2/10/2016 8:33:32 AM

PROJECT TITLE:
ALXE-36 & 36SZ

DRAWING NO.: **510-0673M**
SHEET 1 OF 1

DRAWING TITLE:
ALXE-36 & 36SZ ROTISSERIE PANEL ASSY

ITEM	PART NO.	DESCRIPTION	QTY
1	200-0087	WASHER - 1/4" SPRING LOCK- REGULAR - SS	4
2	200-0219	HEX HD MACHINE SCREW 1/4-20 UNC X 5/8 LONG SS	4
3	200-0361	SCREW 8-32 X 5/8" - FLAT HEAD 82° - PHILLIPS	4
4	210-0571	ALFRESCO 3-1/8 DIA ALXE THERMOMETER	1
5	290-0400	ALFRESCO BBQ / RANGE HANDLE END CAP	2
6	290-0440	ALXE-36 BBQ HANDLE BAR	1
7	510-0924	SPIRAL TORSION SPRING LT	1
8	510-0925	SPIRAL TORSION SPRING RT	1
9	510-0961	ALXE-36 - FRONT HOOD - WELDED PARTS	1

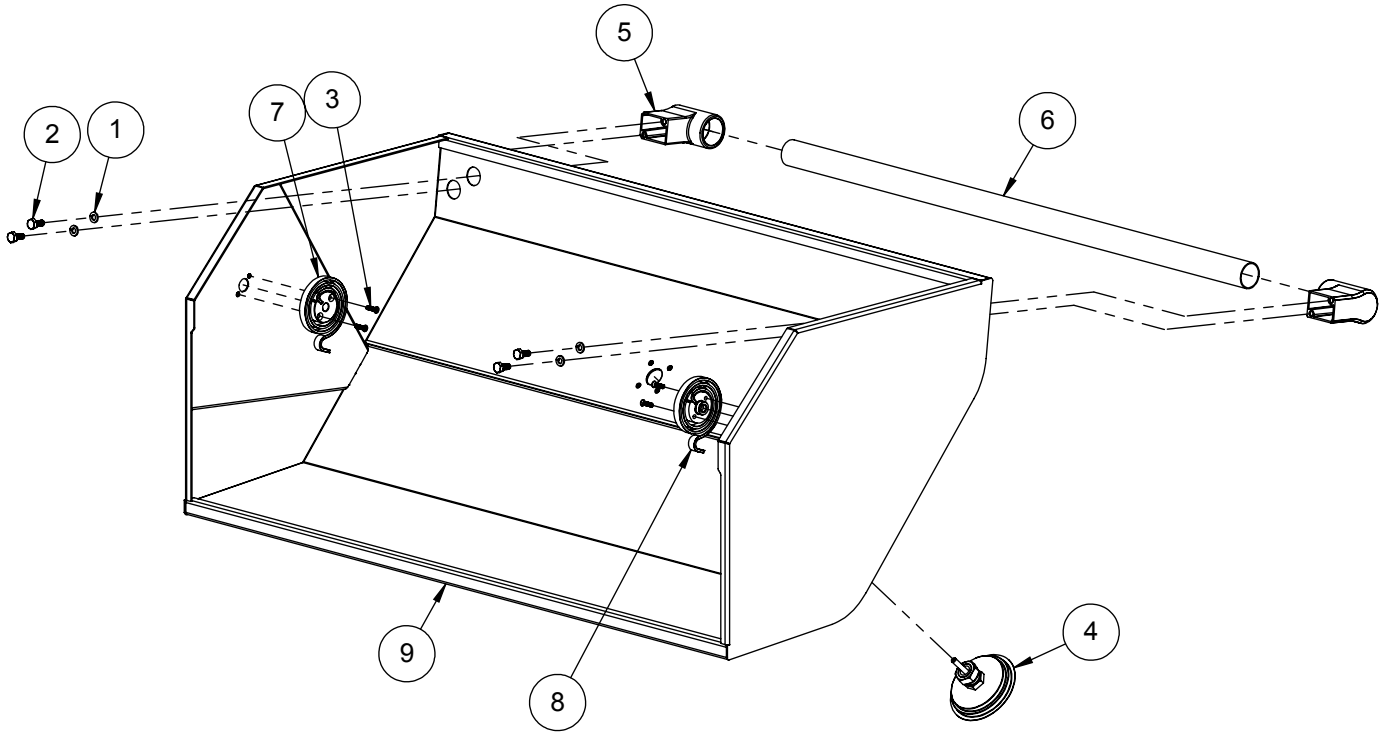

Alfresco™

SUPERIOR EQUIPMENT SOLUTIONS
7039 EAST SLAUSON AVENUE
COMMERCE, CA. 90040

THE INFORMATION CONTAINED IN THIS DRAWING IS THE SOLE PROPERTY OF SUPERIOR EQUIPMENT SOLUTIONS INC. ANY REPRODUCTION IN PART OR AS A WHOLE WITHOUT WRITTEN PERMISSION FROM SUPERIOR EQUIPMENT SOLUTIONS, INC. IS PROHIBITED.

DRAWN BY: N SILCOCK
CREATED: 2/10/2016 10:54:14 AM

PROJECT TITLE:
ALXE-36 & 36SZ

DRAWING NO.: **510-0960M**

SHEET 1 OF 1

DRAWING TITLE:
FRONT HOOD ALXE-36

ITEM	PART NO.	DESCRIPTION	QTY
1	100-2220	ALX2-36 - BRIQUETTE TRAY BASE	1
2	100-2221	ALX2-36 - BRIQUETTE LOCK BAR	2
3	200-0312	SCREW 8-32 x 3/4"- PAN HEAD - PHILLIPS - THREAD CUTTER TYPE F	6
4	265-0005	BRIQUETTE - ALFRESCO CUSTOM	18

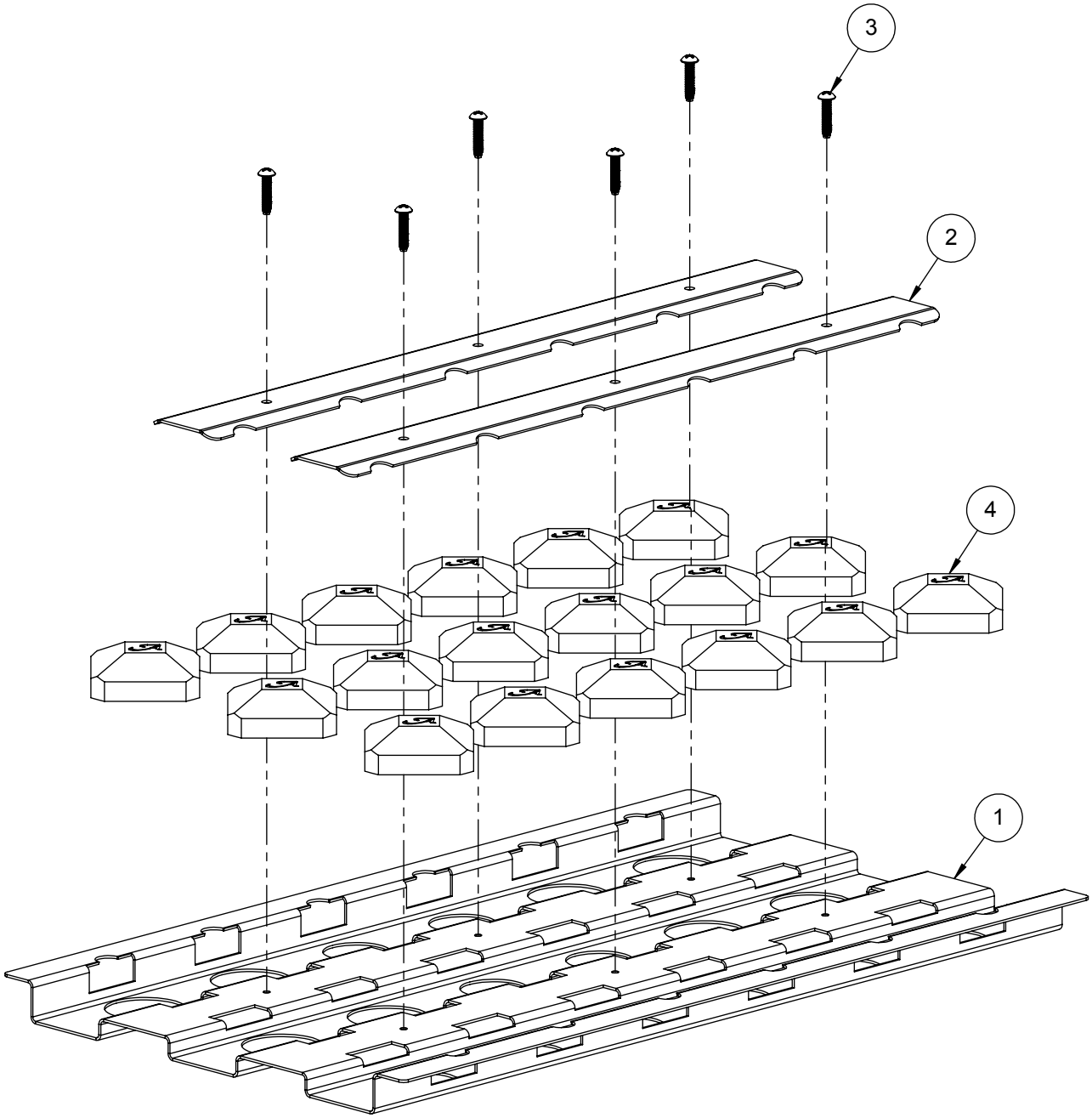

Alfresco™
SUPERIOR EQUIPMENT SOLUTIONS
7039 EAST SLAUSON AVENUE
COMMERCE, CA. 90040

THE INFORMATION CONTAINED IN THIS DRAWING IS THE SOLE PROPERTY OF SUPERIOR EQUIPMENT SOLUTIONS INC. ANY REPRODUCTION IN PART OR AS A WHOLE WITHOUT WRITTEN PERMISSION FROM SUPERIOR EQUIPMENT SOLUTIONS, INC. IS PROHIBITED.

DRAWN BY: N SILCOCK
CREATED: 2/10/2016 1:14:18 PM

PROJECT TITLE:
ALXE-36 & 36SZ

DRAWING NO.: **510-0677M**
SHEET 1 OF 1

DRAWING TITLE:
ALXE-36 - BRIQUETTE TRAY ASSEMBLY

ITEM	PART NO.	DESCRIPTION	QTY
1	100-0917	SEAR ZONE™ GAS LINE (8"L x 3/8" Ø - SS. FLEX TUBE)	1
2	100-0917	ROTISSERIE GAS LINE EXTENSION - 3/8"Ø X 8" - SS	1
3	100-1067	ALX2- SMOKER & SZ™ ORIFICE BRACKET	1
4	100-1949	ROTISSERIE GAS LINE (36"L x 3/8" Ø - SS. FLEX TUBE)	1
5	100-2217	ALX2-36 SMOKER GAS LINE	1
6	200-0274	ELBOW 90°- CAST IRON - 1/2" FPT x 1/2" MPT	1
7	220-0151	COUPLING 3/8" x 3/8" - COMPRESSION - BRASS	1
8	220-0273	ELBOW 90° - 1/8" FPT x 3/16" COMP	1
9	220-0275	NIPPLE - 1/2" MPT X 3/8" OD FL	1
10	220-0276	ELBOW 3/8" MPT x 1/8" FPT x 3/8" COMP	1
11	220-0277	NIPPLE 1/8"MPT x 1/16"MPT	1
12	220-0280	REGULATOR GAS - MAXITROL RV48CL440002	1
13	220-0293	ELBOW 3/8-27 UNS x 3/8" COMP	1
14	220-0416	ALX2-36 GAS MANIFOLD	1
15	290-0041	GAS VALVE - STRAIGHT - WITHOUT ORIFICES	2
16	290-0066	GAS VALVE - ANGLED - ORIFICE: INT= 0.95 mm / EXT=NONE	1
17	290-0433	ALFRESCO - BBQ KNOB	4
18	290-0434	ALFRESCO -ROTISSERIE / SEAR ZONE™ KNOB	1
19	SEE NOTE	GAS VALVE - ANGLED WITH ORIFICE >>> SEE NOTE	3
20	SEE NOTE	ORIFICE - IR ROTISSERIE UNIT (SEE NOTE FOR SIZING)	1
21	SEE NOTE	ORIFICE - SEAR ZONE™ >>> SEE NOTE	1

NOTE: ORIFICE OR VALVE ASSEMBLY TO CHANGE ACCORDING TO FUEL SUPPLY: NATURAL GAS OR LIQUID PROPANE

ITEM	NG GAS PART #	LP GAS PART #
19	290-0310	290-0311
20	220-0285	220-0286
21	220-0289	220-0290

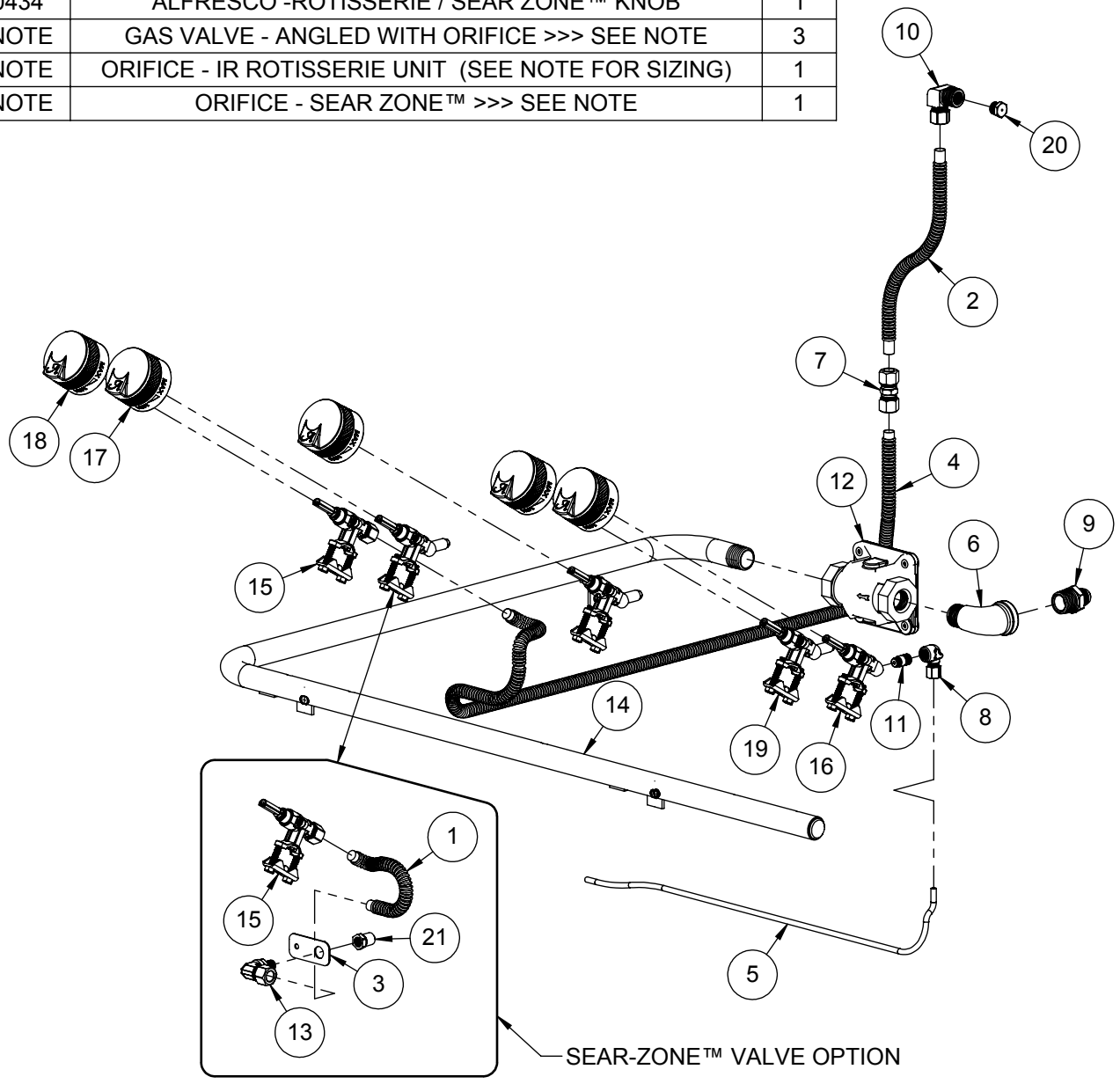

Alfresco™
SUPERIOR EQUIPMENT SOLUTIONS
7039 EAST SLAUSON AVENUE
COMMERCE, CA. 90040

THE INFORMATION CONTAINED IN THIS DRAWING IS THE SOLE PROPERTY OF SUPERIOR EQUIPMENT SOLUTIONS INC. ANY REPRODUCTION IN PART OR AS A WHOLE WITHOUT WRITTEN PERMISSION FROM SUPERIOR EQUIPMENT SOLUTIONS, INC. IS PROHIBITED.

DRAWN BY: N SILCOCK
CREATED: 2/11/2016 7:58:42 AM

PROJECT TITLE:
ALXE-36 AND 36SZ

DRAWING NO.: **510-1038M**
SHEET 1 OF 1

DRAWING TITLE:
ALXE-36 GAS MANIFOLD ASSEMBLY

ITEM	PART NUMBER	DESCRIPTION	QTY
1	100-2633	ALXE-36 - SMOKER BURNER MOUNTING BRACKET	1
2	200-0111	SCREW 8-18 X ½ - SELF TAP - 410 SS	3
3	210-0189	ELECTRODE - "L" SHAPED - MAIN BURNER	1
4	220-0273	ELBOW 90° - 1/8" FPT x 3/16" COMP	1
5	510-0504	ALX2 - SMOKER BURNER ASSEMBLY	1
6	SEE NOTE	ORIFICE - SMOKER UNIT >>> SEE NOTE	1

NOTE: ORIFICE OR VALVE ASSEMBLY TO CHANGE ACCORDING TO FUEL SUPPLY: NATURAL GAS OR LIQUID PROPANE

ITEM	NG GAS PART #	LP GAS PART #
6	220-0313	220-0314

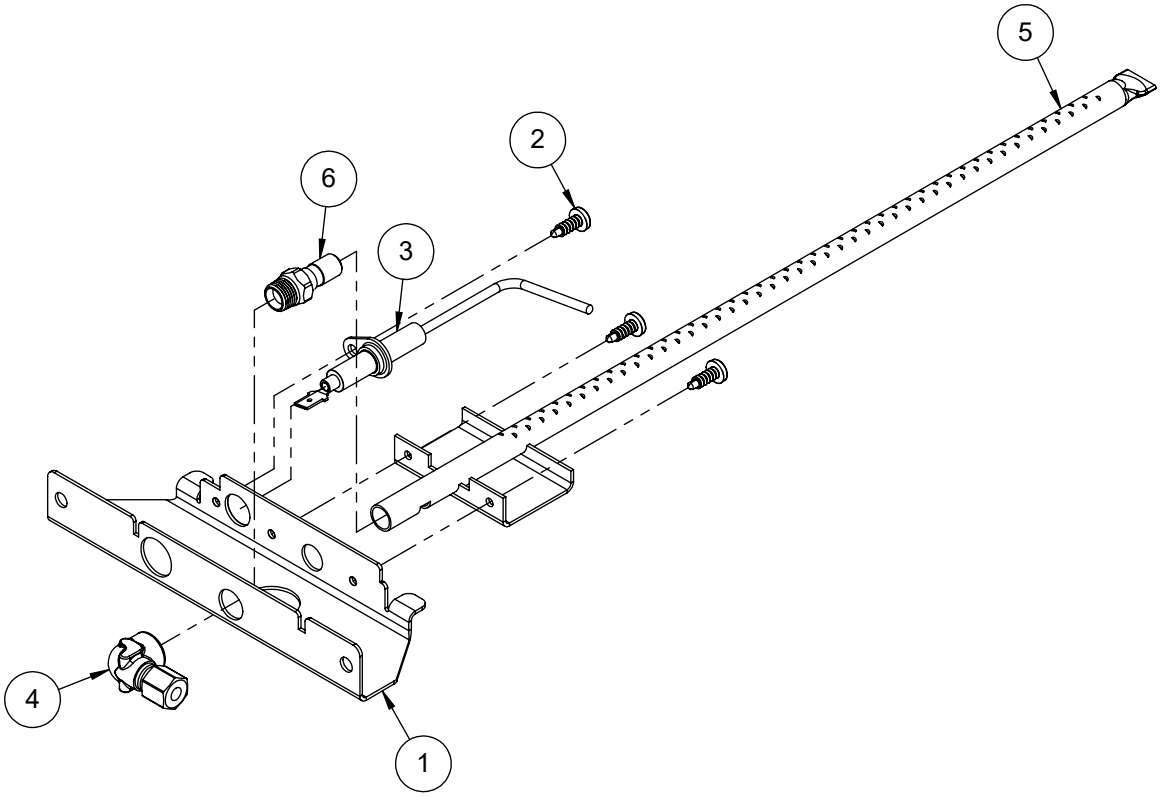

Alfresco™
SUPERIOR EQUIPMENT SOLUTIONS
7039 EAST SLAUSON AVENUE
COMMERCE, CA. 90040

THE INFORMATION CONTAINED IN THIS DRAWING IS THE SOLE PROPERTY OF SUPERIOR EQUIPMENT SOLUTIONS INC. ANY REPRODUCTION IN PART OR AS A WHOLE WITHOUT WRITTEN PERMISSION FROM SUPERIOR EQUIPMENT SOLUTIONS, INC. IS PROHIBITED.

DRAWN BY: N SILCOCK
CREATED: 11/8/2016 11:34:55 AM

PROJECT TITLE:
ALXE BARBECUES

DRAWING NO.: **510-0947M**
SHEET 1 OF 1

DRAWING TITLE:
ALXE-36 SMOKER BURNER ASSEMBLY

ITEM	PART NO.	DESCRIPTION	QTY
1	210-0189	ELECTRODE - "L" SHAPED - U-BURNER / SMOKER	3
2	210-0192	ELECTRODE - DUAL TIP - SEARZONE™	1
3	210-0240	ELECTRODE - DUAL TIP "L" SHAPE- ROTISSERIE	1
4	210-0466	IGNITER MODULE (6 POINTS)	1
5	210-0509	LAMP ASSEMBLY (32" WIRE LENGTH)	1
6	210-0510	LAMP ASSEMBLY (56" WIRE LENGTH)	1
7	210-0543	ALX2-36 / 36SZ - IGNITER WIRE KIT	1
8	210-0626	ALXE PERIMETER LIGHT SWITCH	1
9	510-0514	ALX2 - ROTISSERIE MOTOR BOX ASSEMBLY	1

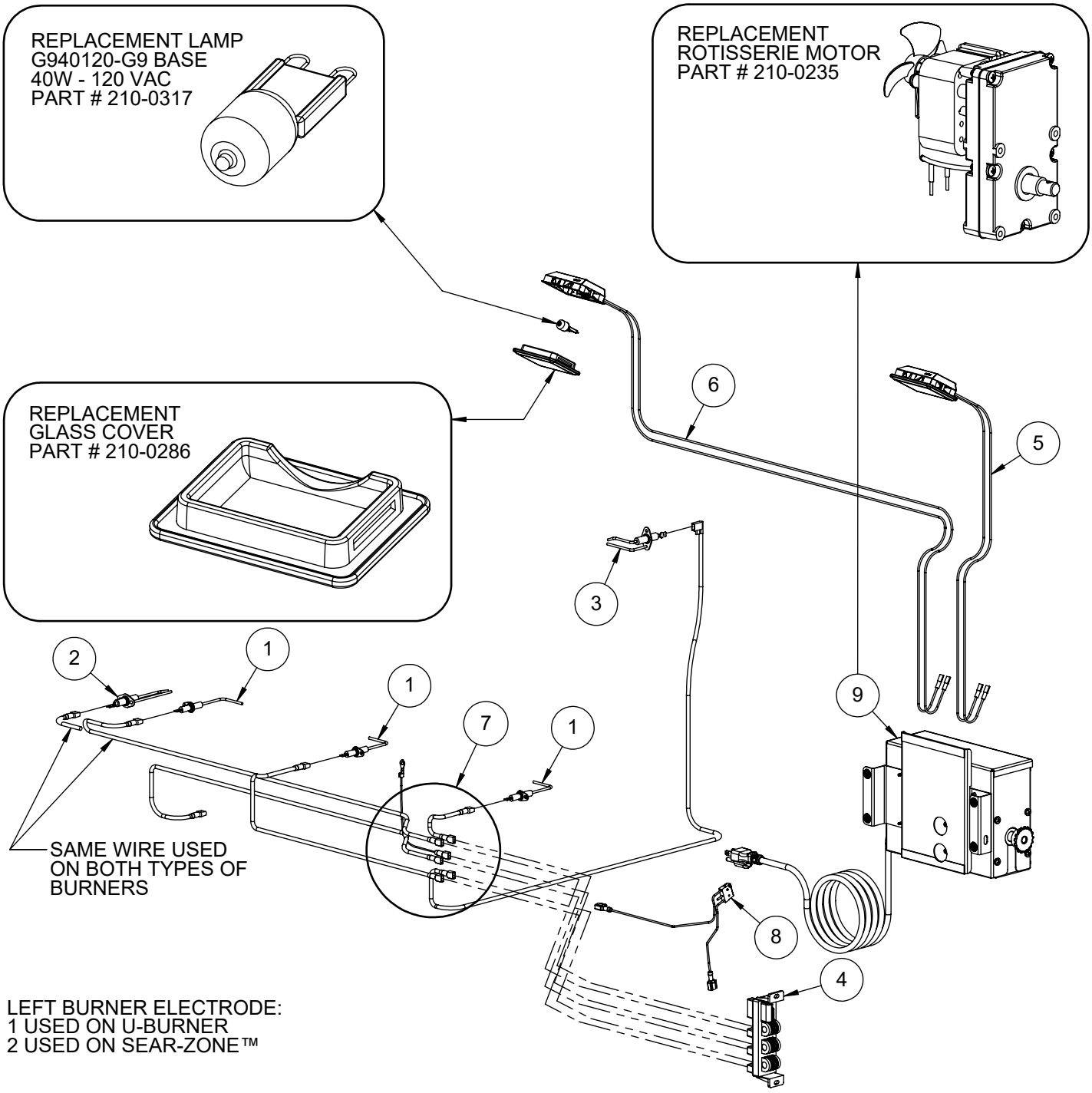

LEFT BURNER ELECTRODE:
1 USED ON U-BURNER
2 USED ON SEAR-ZONE™

Alfresco™
SUPERIOR EQUIPMENT SOLUTIONS
7039 EAST SLAUSON AVENUE
COMMERCE, CA. 90040

THE INFORMATION CONTAINED IN THIS DRAWING IS THE SOLE PROPERTY OF SUPERIOR EQUIPMENT SOLUTIONS INC. ANY REPRODUCTION IN PART OR AS A WHOLE WITHOUT WRITTEN PERMISSION FROM SUPERIOR EQUIPMENT SOLUTIONS, INC. IS PROHIBITED.

DRAWN BY: N SILCOCK
CREATED: 2/11/2016 10:23:37 AM

PROJECT TITLE:
ALXE-36 AND 36SZ

DRAWING NO.: **510-0678M**
SHEET 1 OF 1

DRAWING TITLE:
ALX2-36 / 36SZ - ELECTRICAL COMPONENTS

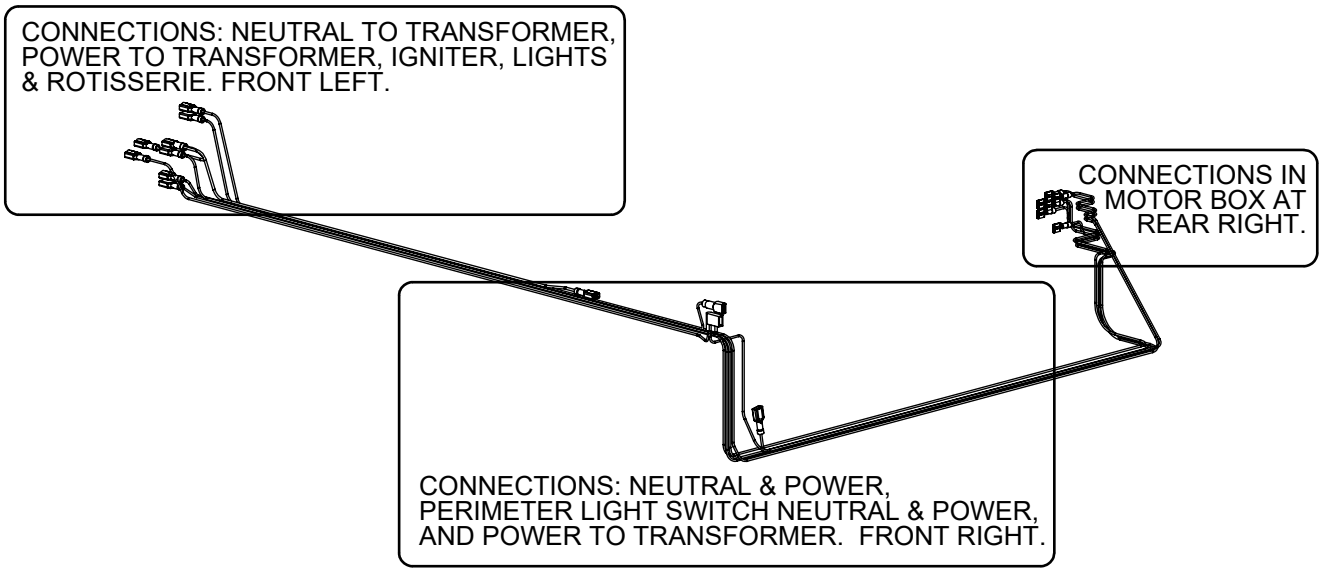

WIRING HARNESS PART NUMBER 210-0606

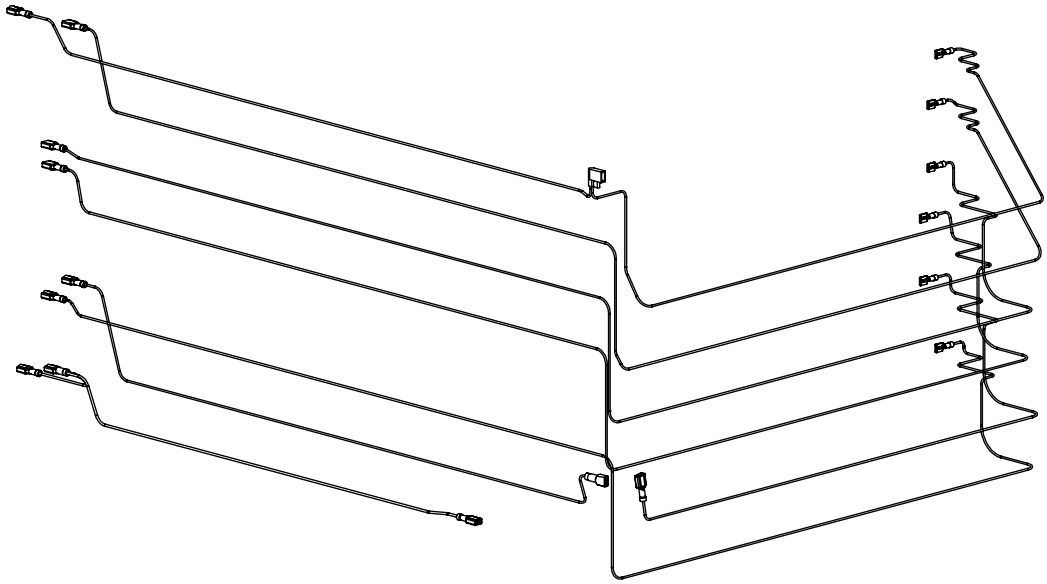

EXPLODED VIEW OF WIRING HARNESS

NOTE: INDIVIDUAL WIRES ARE NOT SOLD SEPARATELY

Alfresco™
SUPERIOR EQUIPMENT SOLUTIONS
7039 EAST SLAUSON AVENUE
COMMERCE, CA. 90040

THE INFORMATION CONTAINED IN THIS DRAWING IS THE SOLE PROPERTY OF SUPERIOR EQUIPMENT SOLUTIONS INC. ANY REPRODUCTION IN PART OR AS A WHOLE WITHOUT WRITTEN PERMISSION FROM SUPERIOR EQUIPMENT SOLUTIONS, INC. IS PROHIBITED.

DRAWN BY: N SILCOCK
CREATED: 2/11/2016 12:42:35 PM

PROJECT TITLE:
ALXE-36 AND 36SZ

DRAWING NO.: **210-0606M**
SHEET 1 OF 1

DRAWING TITLE:
ALXE-36 WIRING HARNESS

ALXE-36 PARTS MANUAL

ALFRESCO™ GOURMET GRILLS

ALL RIGHTS RESERVED 02/2016