best®

SPECIFICATION SHEET

IEX102 SERIES RANGE HOODS

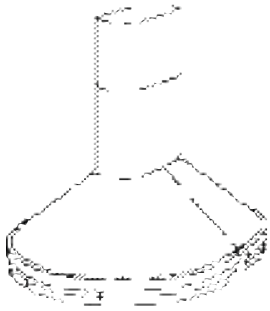

For use with external blowers.

The graceful curvature of the free-hanging flue and canopy dramatizes the appearance of this hand-rolled, masterpiece.

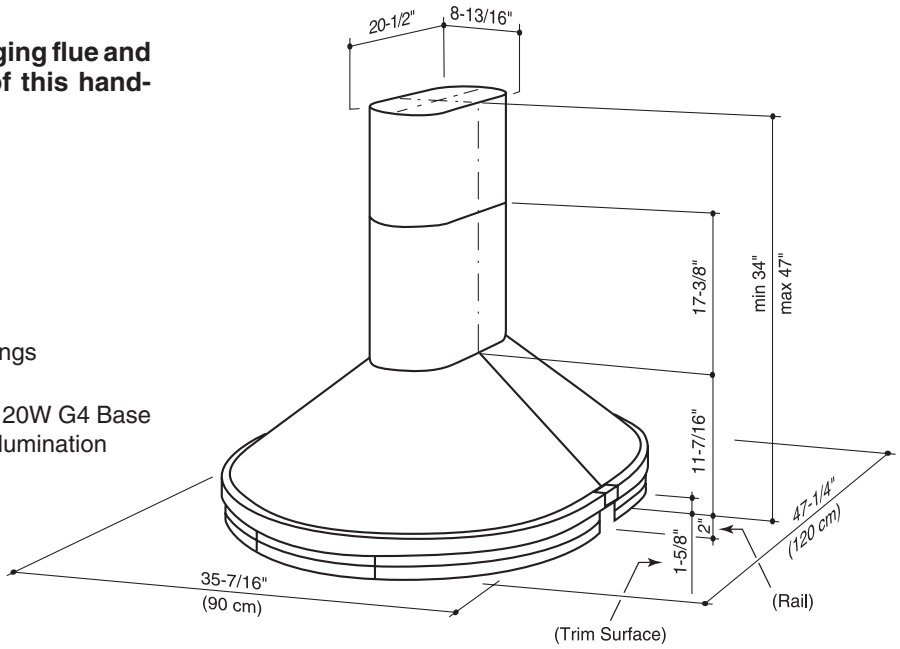

Mount range hood so bottom of hood is 24” minimum above cooking surface.

FEATURES

- Italian design
- Island ceiling mount
- Finish: 304 Stainless Steel #4 Brushed
- Size: 90cm x 120cm (35-7/16” x 47-1/4”)
- Telescopic flue accommodates 8’ to 9’ ceilings
- 8” round duct connector/backdraft damper
- Halogen lighting (4 x 20 watt, Type JC 12V 20W G4 Base - bulbs included) provides bright cooktop illumination
- 0.86 Amps - Hood lighting only
- Slide controls: on-off, variable speed
- External mounted blowers available from 280 CFM to 1500 CFM
- Dishwasher-safe filter features a quick-release latch and decorative cover plate
- Heat Sentry™ - automatically turns blower to high speed when excess cooking heat is detected
- For indoor use only

OPTIONS

- 8” to 10” transition (Model 414)
- Flue extension for 10’ ceiling (Model FEXTIS102)
- Replacement grease filters available
- Replacement bulb (Part No. SB02300891)
- Internal blower version available (IS102)

c UL US

BEST Hartford, Wisconsin www.BestRangeHoods.com 800-558-1711
BEST Drummondville, QC, Canada www.BestRangeHoods.com 866-737-7770

REFERENCE	QTY.	REMARKS	Project
			Location
			Architect
			Engineer
			Contractor
			Submitted by Date

BLOWER SPECIFICATIONS (purchase blower separately)

	IN-LINE BLOWERS				EXTERNAL BLOWERS			
MODEL	**ILB3**	**ILB6**	**ILB9**	**ILB11**	**EB6**	**EB9**	**EB12**	**EB15**
VOLTS	120	120	120	120	120	120	120	120
AMPS	2.6	2.9	3.0	3.0	2.3	5.7	3.0	3.8
CFM	260 (H)	600 (H)	700 (H)	1000 (H)	600	900	1200	1500
CFM	280 (V)	600 (V)	800 (V)	1100 (V)				
DUCT	8” Rd.*	4½” x 18½”	8” x 12”	8” x 12”	10” Rd.*	10” Rd.*	10” Rd.*	10” Rd.*

* 8” Round Duct connects to hood. 10” Round Duct connects to External Blower. Use Model 414 (8” to 10” Transition).

IEX102 SERIES WIRING

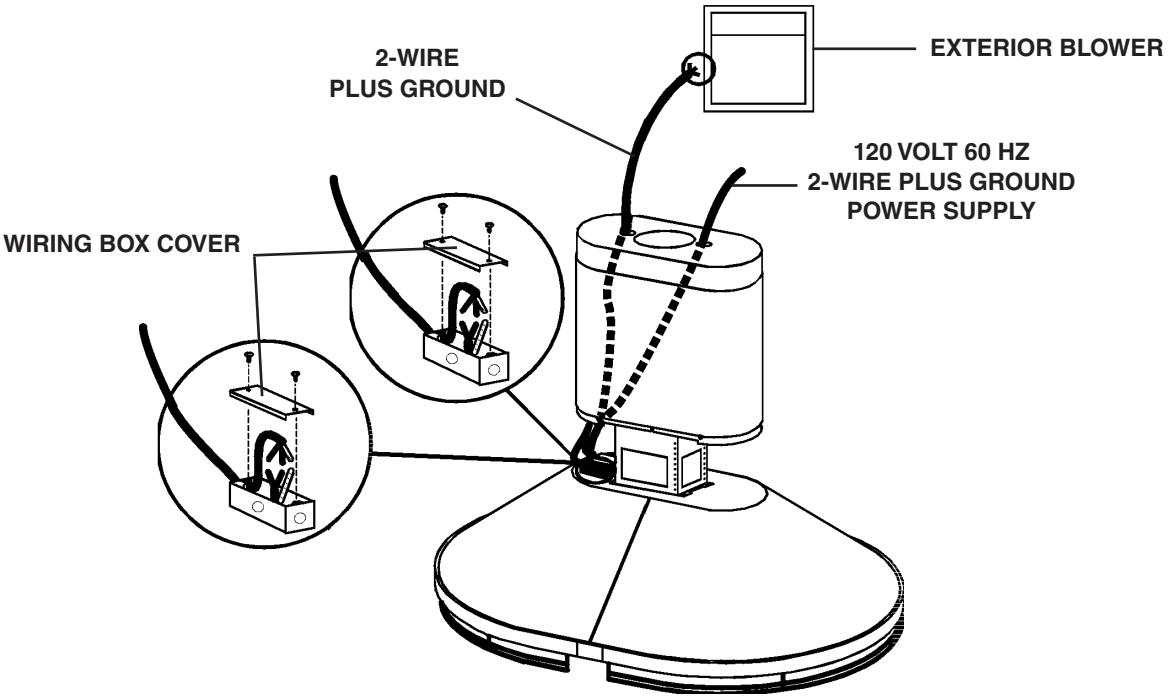

IEX102 SERIES MOUNTING

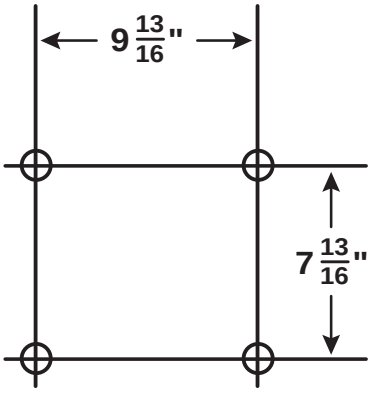

best®