30-INCH PRO DUAL-FUEL RANGE

HDPR30 | HERITAGE COLLECTION

AVAILABLE MODELS

HDPR30/NG	30" Heritage Dual Fuel Pro Range - Stainless Steel Natural Gas
HDPR30/LP/H	30" Heritage Dual Fuel Pro Range - Stainless Steel Liquid Propane High Altitude
HDPR30/LP	30" Heritage Dual Fuel Pro Range - Stainless Steel Liquid Propane
HDPR30/NG/H	30" Heritage Dual Fuel Pro Range - Natural Gas High Altitude
HDPR30C/NG/H	30" Heritage Dual Fuel Pro Range - Color Match Natural Gas High Altitude
HDPR30C/NG	30" Heritage Dual Fuel Pro Range - Color Match Natural Gas
HDPR30C/LP/H	30" Heritage Dual Fuel Pro Range - Color Match Liquid Propane High Altitude
HDPR30C/LP	30" Heritage Dual Fuel Pro Range - Color Match Liquid Propane

FEATURES & BENEFITS

- Exclusive Four-Part Pure Convection – heating element, air baffle, fan and filter to precisely distribute heat for superior cooking results.
- Large oven capacity - 5.2 cu. ft.
- 4 Dual-Stack Sealed Burners.
- Powerful 18K BTU and true simmer burners.
- Illumina™ Knobs – White LED
- LED Tilt-Vue™ Glass Touch Control
- Soft Close Oven Door
- Continuous Grate Platform
- All Brass Valves, Heads and Caps

ADDITIONAL FEATURES

CLEANING TYPE	SELF CLEAN GREENCLEAN™
TYPE OF GRATE	CONTINUOUS CAST IRON
CAVITY	BLACK ENAMEL COATING
RACK POSITIONS	6
LIGHTING	LED & HALOGEN

GENERAL PROPERTIES

OVEN CAPACITY (CUBIC FEET)	5.2 CU FT.
COOKING MODES	PURE CONVECTION™ CONVECTION BAKE CONVECTION BROIL CONVECTION ROAST BAKE BROIL

OVEN PERFORMANCE

BAKE ELEMENT	3,000W - 8 PASS
BROIL ELEMENT	3,500W - 8 PASS
CONVECTION ELEMENT	2,200W - 2 PASS

BURNER PERFORMANCE

TOTAL NUMBER OF COOKTOP BURNERS	4 DUAL STACK BRASS BURNERS
LEFT FRONT (BTU)	18,000 DUAL (SIMMER/SEAR)
LEFT REAR (BTU)	15,000 STACK DUAL (SIMMER)
RIGHT FRONT (BTU)	15,000 STACK DUAL (SIMMER)
RIGHT REAR (BTU)	15,000 STACK DUAL (SIMMER)
SEALED BURNERS	YES
PERMA-FLAME™ (AUTO RE-IGNITION)	YES

ADDITIONAL MODES

KEEP WARM	YES
PROOF	YES
TEMPERATURE PROBE	YES
DEHYDRATE	YES
SABBATH	YES

CONTROL FEATURES

LED (WHITE)	YES
NUMBER OF KNOBS	4 KNOBS
CONTROL METHOD	LED GLASS TOUCH CONT
ILLUMINA™ BURNER KNOBS	YES
HIGHLIGHTING COLOR	WHITE
CLOCK	YES
DELAY START	YES
KITCHEN TIMER	YES 2
TIME OF DAY (12 HR/24 HR)	YES
TEMPERATURE (F/C)	YES
CHILD LOCK	YES
SOUND ON/OFF	YES

TECHNICAL DETAILS

CIRCUIT BREAKER (A)	40 AMP
VOLTS (V)	240 V
FREQUENCY (HZ)	60 HZ
ENERGY SOURCE	GAS AND ELECTRICAL
GAS TYPES	NATURAL GAS NATURAL GAS (HIGH ALTITUDE) LIQUID PROPANE LIQUID PROPANE (HIGH ALTITUDE)

DIMENSIONS & WEIGHT

APPLIANCE DIMENSIONS (H X W X D) (IN.)	36 1/8" X 29 7/8" X 26 7/8"
REQUIRED CUTOUT SIZE (W X D) (IN.)	30" X 24"

WARRANTY

LIMITED, PARTS AND LABOR	1 YEAR

dacor 30-INCH PRO DUAL-FUEL RANGE

APPLIANCE DIMENSIONS

30"	
A (WIDTH)	29 7/8" (75.9CM)
B (DEPTH)	24" (60.1CM)
C (HEIGHT)	36 3/16 TO 37 1/2 (91.9-95.3CM)

Product tolerances: ±/-1/16" (+/-1.6MM)

CABINET CUT-OUT DIMENSIONS

RANGE MODEL	F	G
HDPR30	36" (91.4 CM)* 30" (76.2 CM)**	30" (76.2 CM)**

* Recommended
** Minimum

Cutout tolerances: +1/16" (+1.6 mm), -0 unless otherwise stated

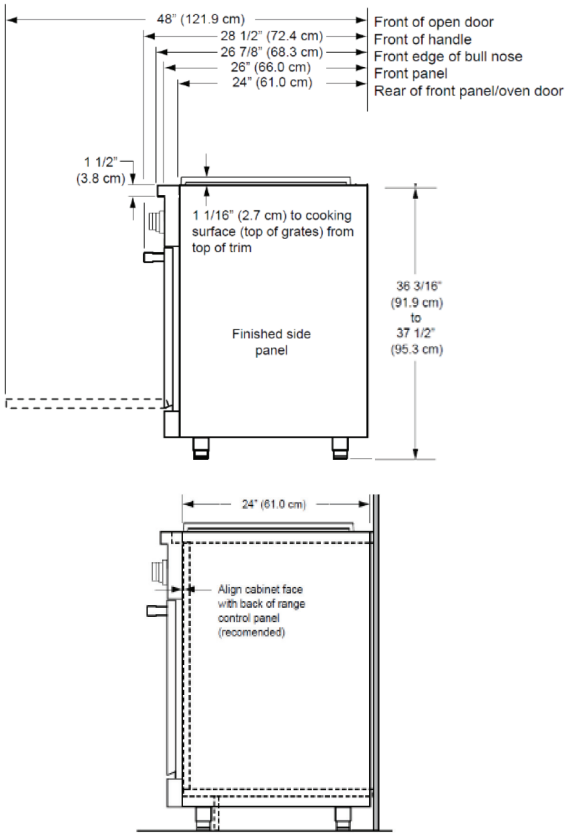

View of Range Installed (Side View)

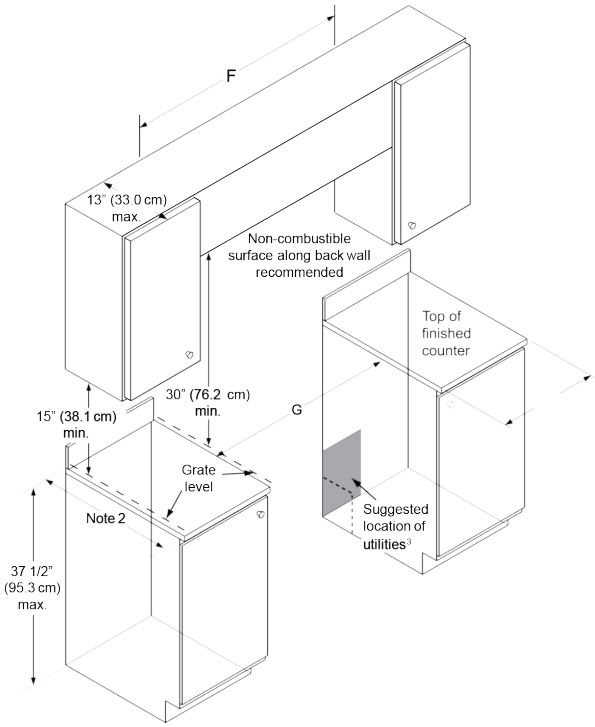

ACCESSORIES (INCLUDED)

GLIDERACK™	2
STANDARD RACK	1
TEMPERATURE PROBE	1
WOK RING	1
CONVECTION FILTER	1
BRASS/BLACK PORCELAIN BURNER CAPS	6/EA
REMOVABLE NON-STICK GRIDDLE	1

ACCESSORIES (OPTIONAL)

COOKIE SHEETS (SET OF 3)	ACSRO303
REMOVABLE NON-STICK GRIDDLE	AG30
REMOVABLE NON-STICK SEARING GRILL	AEGR30
BAKING STONE	ABS16
BROIL/ROASTING PAN W/GRILL & V RACK	AORPVR
STAINLESS STEEL BACKGUARD, MOUNTS TO UNIT (6 IN HIGH)	AERB30D6
STAINLESS STEEL BACKGUARD, MOUNTS TO UNIT (9 IN HIGH)	AERB30D9
3" SIDE PANELS	ARSP3