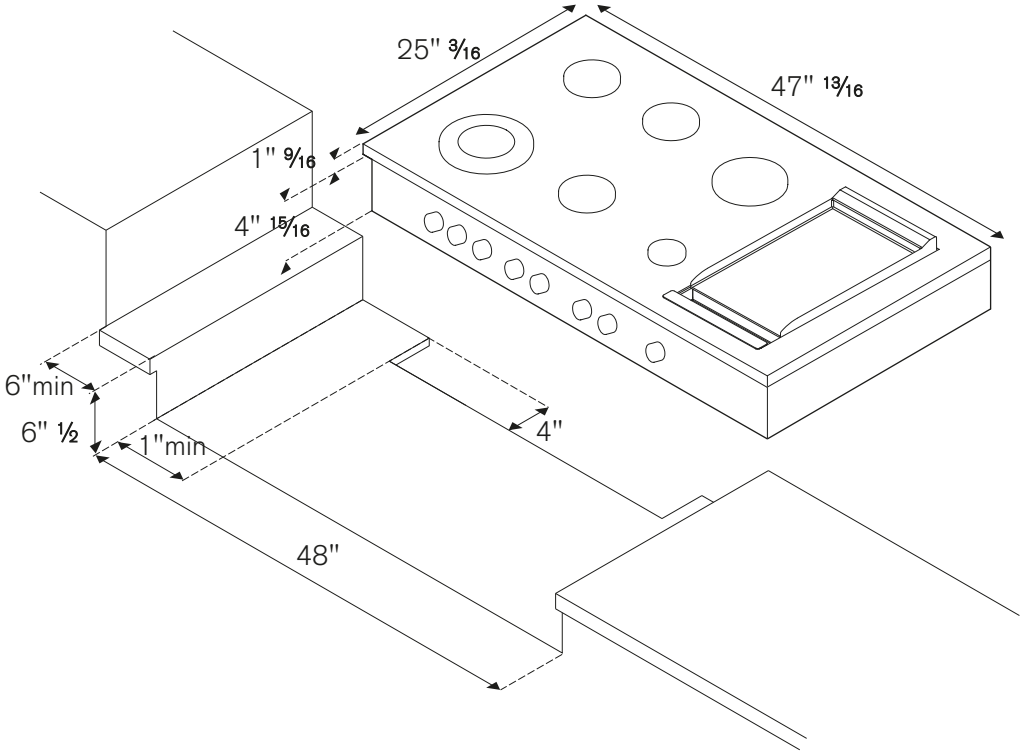
25" 3/16
47" 13/16
1" 9/16
4" 15/16
6"min
6" ½
1"min
4"
48"