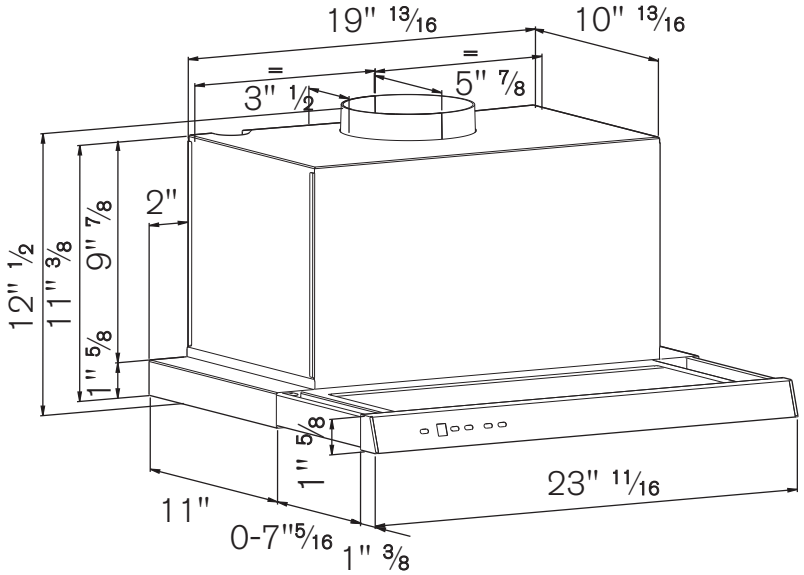
19" 13/16
10" 13/16
3" 1/2
5" 7/8
2"
12" 1/2
11" 3/8
9" 7/8
1" 5/8
1" 5/8
23" 11/16
11"
0-7"5/16
1" 3/8