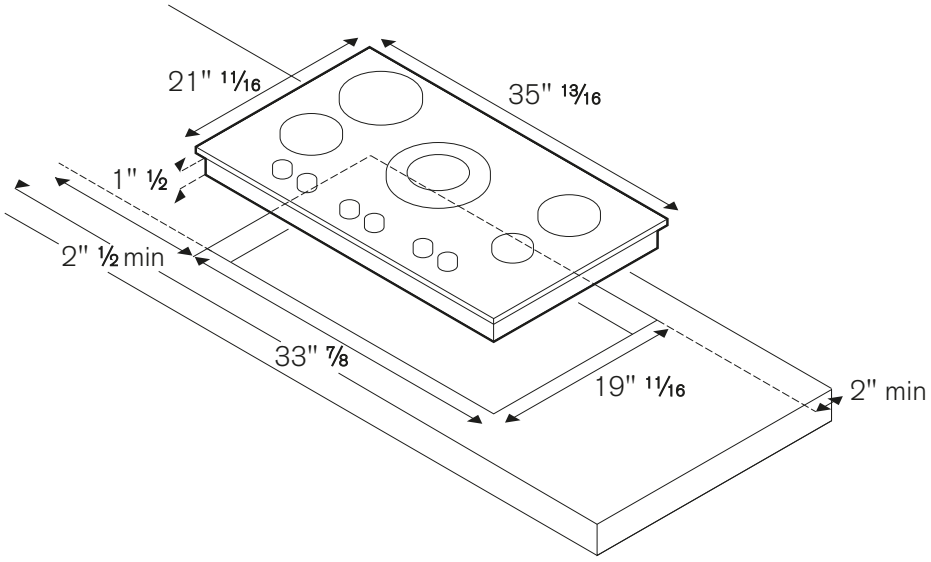
21" 11/16
35" 13/16
1" 1/2
2" 1/2 min
33" 7/8
19" 11/16
2" min