30-INCH DOUBLE WALL OVEN

DOB30M977D | MODERNIST COLLECTION

AVAILABLE MODELS

DOB30M977DM	30" Steam-Assisted Double Wall Oven Graphite Stainless Steel
DOB30M977DS	30" Steam-Assisted Double Wall Oven Stainless Steel

FEATURES & BENEFITS

- Available in graphite stainless steel and silver stainless steel.
- Exclusive Four-Part Dual Pure Convection - heat, air, baffle and filter to precisely distribute heat for superior cooking results.
- Steam and Convection Oven - the power of steam assist and convection cooking in one.
- Large oven capacity: 4.8 / 4.8 cu. ft.
- Easy to use / refill water reservoir for steam cooking.
- 7" LCD control panel.
- BrightVue™ - integrated LED lights in the oven door + Halogen lights.
- SoftShut™ oven doors.
- Dacor iQ Kitchen app with integrated Wi-Fi to control and monitor remotely.

ACCESSORIES (INCLUDED)	
GLIDERACK™	2 (UPPER) / 2 (LOWER)
STANDARD RACK	1 (UPPER) / 1 (LOWER)
TEMPERATURE PROBE	1 (UPPER)
MESH FILTER	4
AUTOMATIC WATER RESERVOIR	1 (UPPER)

ACCESSORIES (OPTIONAL)	
COOKIE SHEETS (SET OF 3)	SKU - ACSM303

GENERAL PROPERTIES	
COOKING MODES UPPER CAVITY	BAKE - BROIL - CONVECTION BAKE - CONVECTION ROAST - CONVECTION BROIL - FOUR PART PURE CONVECTION - PURE CONVECTION SEAR - STEAM BAKE - STEAM ROAST
COOKING MODES LOWER CAVITY	BAKE - BROIL - CONVECTION BAKE - CONVECTION ROAST - CONVECTION BROIL - FOUR PART PURE CONVECTION - PURE CONVECTION SEAR

ADDITIONAL FEATURES	
CLEANING TYPE	SELF CLEAN (BOTH OVENS) & GREENCLEAN (BOTH OVENS)
CONTROLS	7" TFT LCD
WI FI	YES
RACK POSITIONS	6
CONVECTION TYPE	FOUR PART DUAL PURE CONVECTION WITH MESH FILTER
LIGHTING	BRIGHTVUE™ - LED + HALOGEN

OVEN PERFORMANCE	
BAKE ELEMENT	3,000W - 8 PASS
BROIL ELEMENT	4,400W - 10 PASS
CONVECTION ELEMENT	1,300W (EACH - 2,600W TOTAL)
STEAM HEATER	500W

CONTROL FEATURES	
DELAY START	YES (BOTH OVENS)
KITCHEN TIMER	YES (BOTH OVENS)
SABBATH MODE	YES
CHILD LOCK	YES

ADDITIONAL MODES	
KEEP WARM	YES (BOTH OVENS)
PROOF (LOWER TEMP)	YES (BOTH OVENS)
PROOF	YES (BOTH OVENS)
PIZZA STONE MODE	YES (BOTH OVENS)
DEHYDRATE	YES (BOTH OVENS)
GOURMET COOK	YES (BOTH OVENS)
INSTANTHEAT™	YES (BOTH OVENS)
TEMPERATURE PROBE	YES (UPPER OVEN)
AUTO CONVERSION	YES

TECHNICAL DETAILS	
CIRCUIT BREAKER (A)	50
VOLTS (V)	240 / 208
FREQUENCY (HZ)	60
ENERGY SOURCE	ELECTRIC

DIMENSIONS & WEIGHT	
APPLIANCE DIMENSIONS (H X W X D) (IN.)	51 1/2" X 29 7/8" X 24 1/2"
REQUIRED CUTOUT SIZE (H X W X D) (IN.)	50 1/4" X 30 1/4" X 24 7/8"
OVEN CAPACITY (CUBIC FEET)	4.8
NET WEIGHT (LBS)	139

WARRANTY	
LIMITED, PARTS AND LABOR	1 YEAR

dacor 30-INCH DOUBLE WALL OVEN

APPLIANCE DIMENSIONS

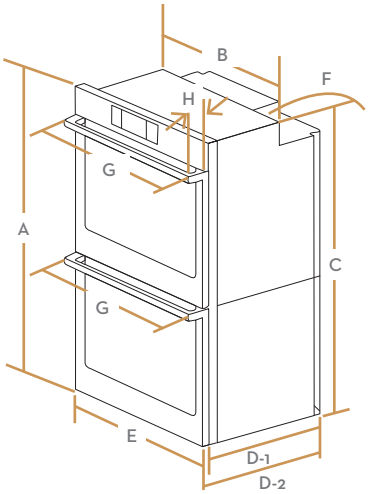

APPLIANCE DIMENSIONS

30"		
A	51 1/2" (130.7CM)	OVERALL HEIGHT (RECESSED HEIGHT IN FLUSH INSTALL)
B	28 1/2" (72.4CM)	RECESSED WIDTH
C	49 7/8" (126.7CM)	RECESSED HEIGHT
D-1	23 1/8" (58.7CM)	RECESSED DEPTH (STANDARD INSTALL)
D-2	24 2/5" (62.0CM)	RECESSED DEPTH (FLUSH INSTALL)
E	29 3/4" (75.6CM)	DOOR WIDTH
F	67" (170CM)	CONDUIT LENGTH
G	30" (76.2CM)	OVERALL WIDTH (HANDLE WIDTH)
H	2 1/5" (5.6CM)	HANDLE DEPTH

INSTALLATION CUTOUT DIMENSIONS

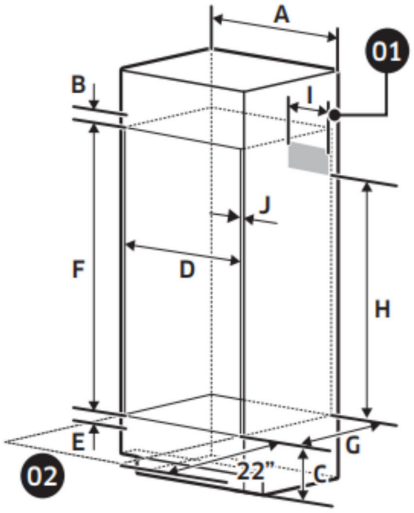

01 - Junction Box

02 - Allow a minimum of 22" for clearance to adjacent corners, drawers, walls, etc. when door is ope

INSTALLATION CUTOUT DIMENSIONS

CABINET	STANDARD INSTALL DIMENSION
A	30" (76.2CM)
B	MIN. 1 3/16" (3.0CM)
C	12" (30.5CM)
D	MIN. 28 1/2" / MAX. 28 5/8" (MIN. 72.4CM / MAX. 72.7CM))
E	MIN. 1" / MAX. 1 1/4" (MIN. 2.5CM / MAX. 3.2CM)
F	50 1/4" (127.6CM)
G	MIN. 23 1/2" (MIN. 59.7CM)
H	MIN. 47" (MIN. 119.4CM)
I	MAX. 9 1/2" (MAX. 24.1CM) JUNCTION BOX
J	MIN. 11/16" (1.75CM) - WOODEN CABINET THICKNESS

INSTALLATION CUTOUT DIMENSIONS

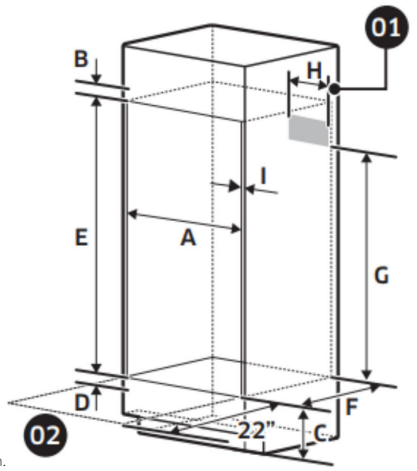

01 - Junction Box

02 - Allow a minimum of 22" for clearance to adjacent corners, drawers, walls, etc. when door is open.

INSTALLATION CUTOUT DIMENSIONS

CABINET	FLUSH INSTALL DIMENSION
A	MIN. 30 1/5" / MAX. 30 3/10" (MIN. 76.7CM / MAX. 76.9CM)
B	MIN. 1 3/16" (3.0CM)
C	12" (30.5CM)
D	MIN. 1" / MAX. 1 1/4" (MIN. 2.5CM / MAX. 3.2CM)
E	51 4/5" (131.6CM)
F	MIN. 24 4/5" (MIN. 63CM)
G	MIN. 47" (MIN. 119.4CM)
H	MAX. 9 1/2" (MAX. 24.1CM) JUNCTION BOX
I	MIN. 11/16" (1.75CM) - WOODEN CABINET THICKNESS