Planning Guide

Modernist Wall Oven
DOB30M977

DACOR MOERNIST

UNIT	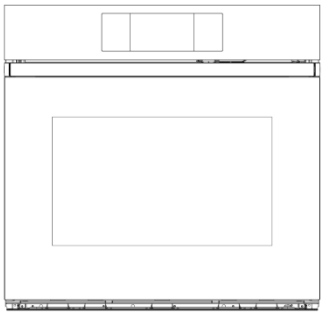 **Single oven** **DOB30M977SS** **DOB30M977SM**	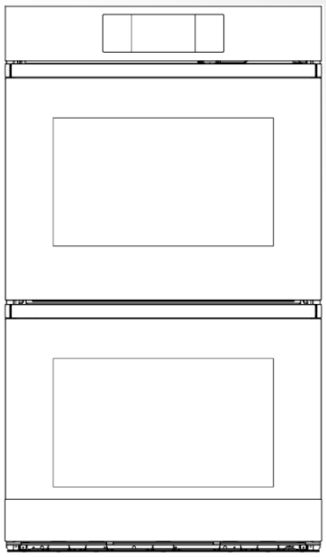 **Double oven** **DOB30M977DS** **DOB30M977DM**
CONTROL	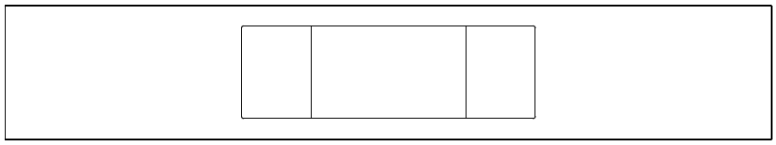 **Flat aluminum** **(Graphite or Silver)**	
HANDLE	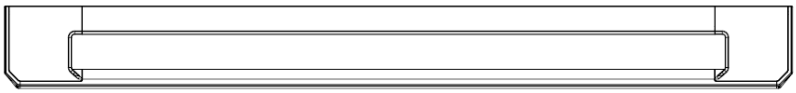 **Flat aluminum** **(Graphite or Silver)**	
GLASS	 **Smog glass, Black printing with silver logo** **(Transparency 33%)**	

PLANNING CHECK PROCESS

① Double or Single Wall oven configurations

② Plan the cutout Width and Depth
· depending on install method
(Standard or Flush install)

③ Plan the cutout Height
· depending on install method and configuration
(Single or Double oven)

④ Gas or Electric cooktops may be installed over oven
· Check approved cooktop models(Single oven only)

⑤ Check for interference with other appliances
· Allow a min. 22” for clearance when door is open

⑥ Check proper location for the electrical outlet

⑦ Procure the proper installation materials

① Double or Single Wall oven configurations

	Double	Single
Width	30″	30″
Control Panel	Silver or Graphite Aluminum	Silver or Graphite Aluminum
Handle	Silver or Graphite Aluminum	Silver or Graphite Aluminum

Wall oven

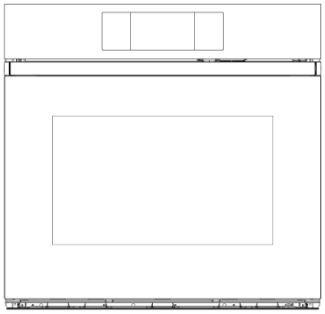

Single
DOB30M977SS (Silver)
DOB30M977SM (Graphite)

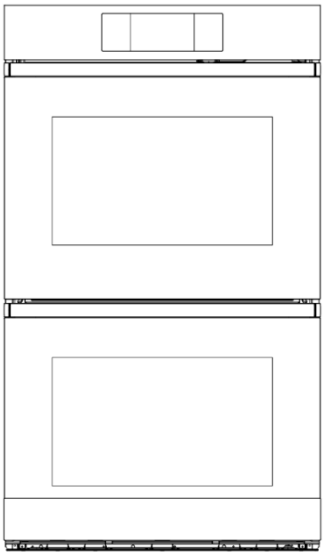

Double
DOB30M977DS (Silver)
DOB30M977DM (Graphite)

② Plan the cutout Width and Depth
· depend on install method
(Standard or Flush install)

▶

③ Plan the cutout Height
· depend on install method and configuration
(Single or Double oven)

It is important to observe the specified dimensions of the installation cutout for a trouble-free installation of the appliance.
- The appliance can be installed ~~by~~ two ways, STANDARD INSTALL or FLUSH INSTALL, Note: cabinet cut out dimensions are different for each method.
- Standard install needs recessed dimensions and Flush install needs overall dimensions.
- Detailed install dimensions can be confirmed by reviewing the Installation Instructions.

	TOP VIEW	SIDE VIEW (Single oven)	SIDE VIEW (Double oven)
STANDARD INSTALL (Refer to the recessed dimensions)	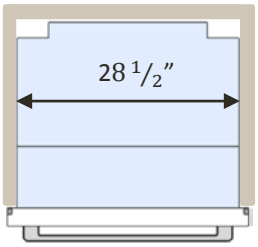	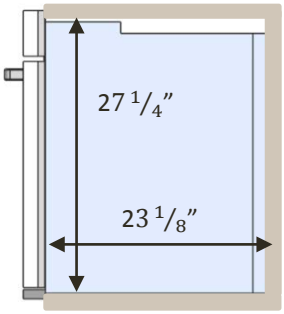	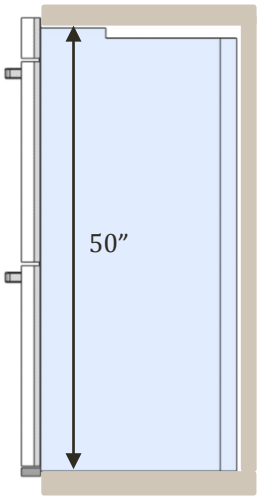
FLUSH INSTALL (Refer to the overall dimensions)	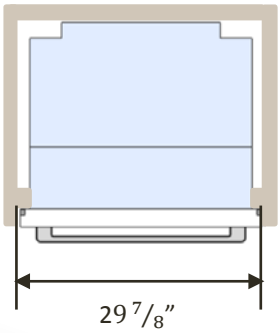	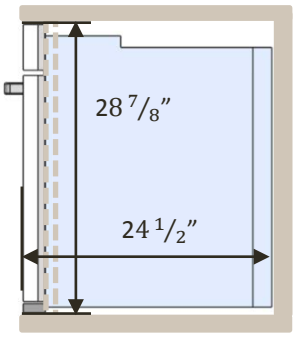	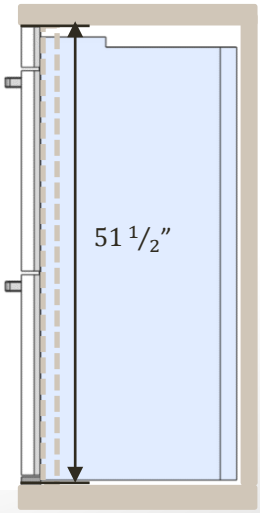

④ Gas or Electric cooktops may be installed over oven
· Check approved cooktop models(Single oven only)

⑤ Check for interference with other appliances
· Allow a min. 22" for clearance when door is open

⑥ Check proper location for the electrical outlet

■ Single Oven-Standard

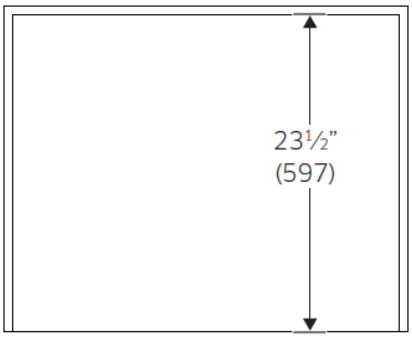

Top view

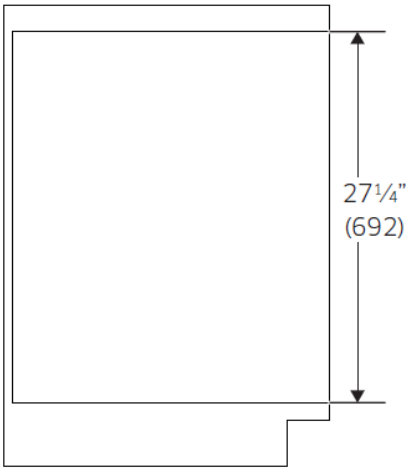

Side view

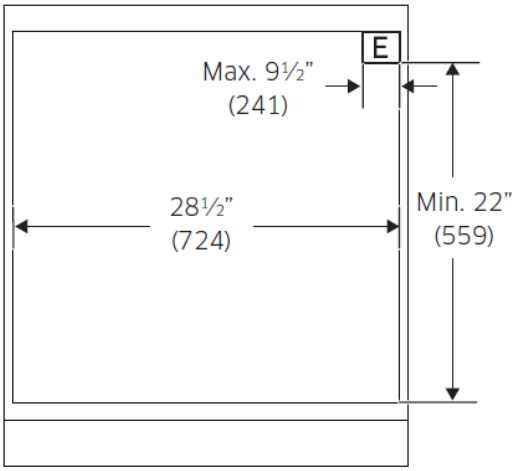

Front view

■ Single Oven-Flush

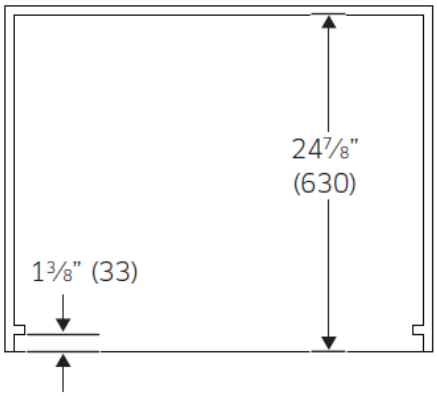

Top view

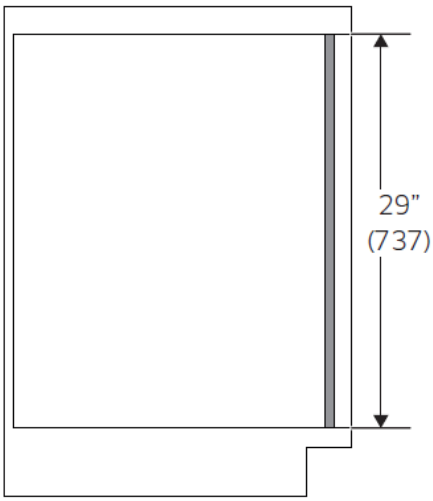

Side view

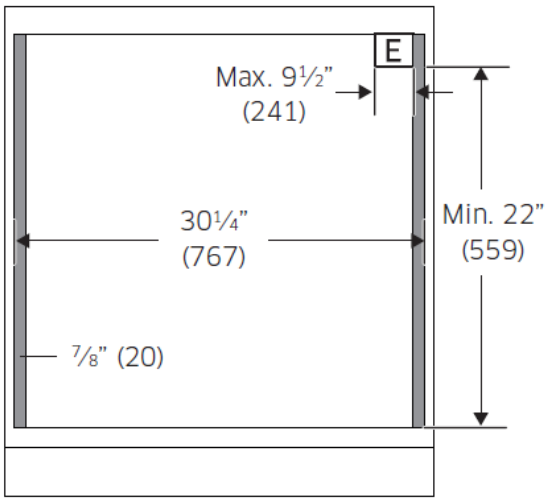

Front view

■ Double Oven-Standard

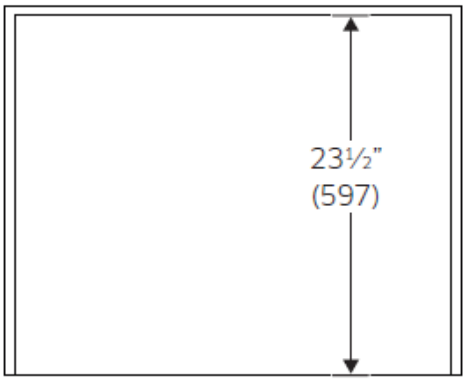

Top view

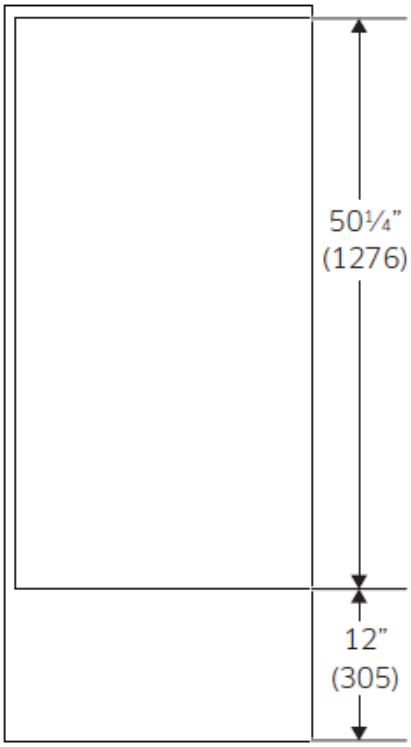

Side view

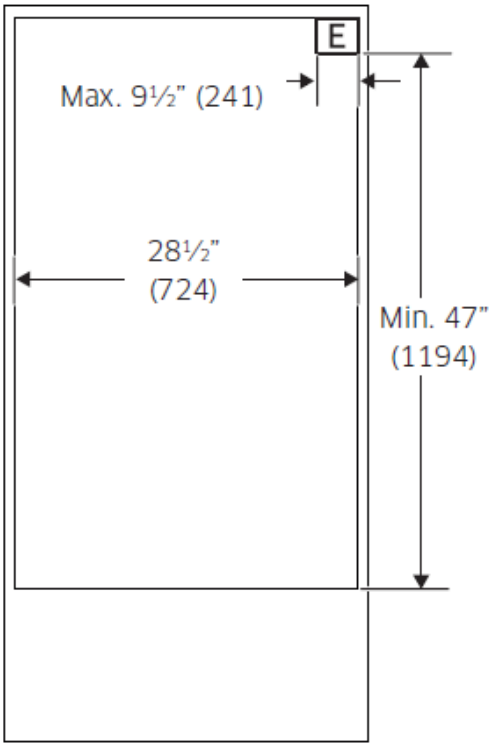

Front view

■ Double Oven-Flush

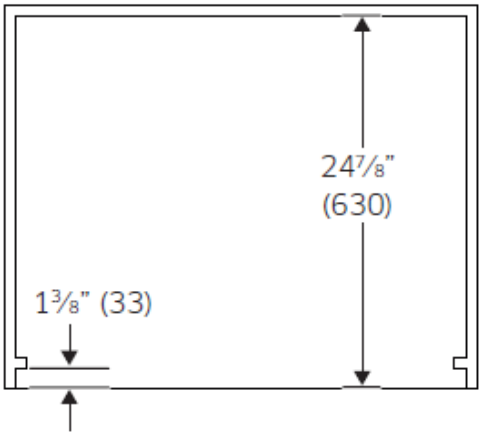

Top view

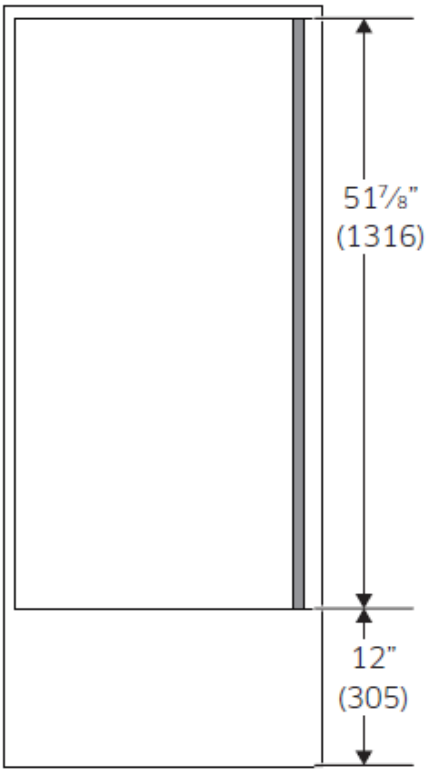

Side view

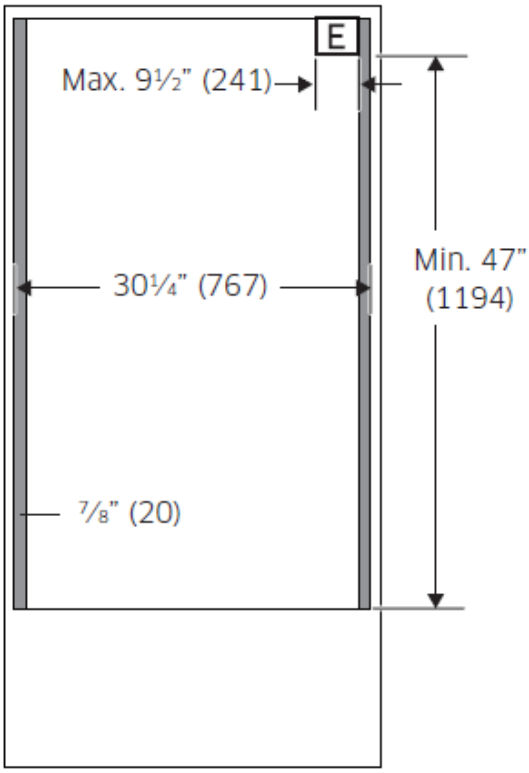

Front view

ELECTRICAL SPECIFICATIONS

3-Wire Cable from Home Power Supply - U.S. Only

IMPORTANT: Use the 3-wire cable from home power supply where local codes permit a 3-wire connection.

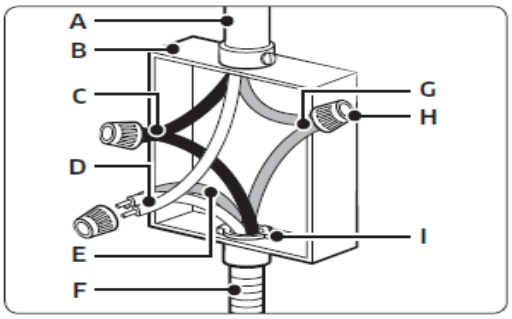

1. Connect the 2 black wires (C) together using a UL listed wire connector.
2. Connect the 2 white wires (D) and the green (or bare) ground wire (of the oven cable) using a UL listed wire connector.
3. Connect the 2 red wires (G) together using a UL listed wire connector.
4. Install junction box cover.

A. Cable from home power supply
B. Junction box
C. Black wires (normally L1)
D. White wires (normally N-neutral)
E. green wires (normally G-ground)
F. 4-wire flexible conduit from oven
G. Red wires (normally L2)
H. UL listed wire connectors
I. UL listed or CSA approved conduit connector

4-Wire Cable from Home Power Supply

IMPORTANT: Use the 4-wire cable from home power supply in the U.S. where local codes do not allow grounding through neutral, New Branch circuit installations (1996 NEC), mobile homes and recreational vehicles, new construction and in Canada.

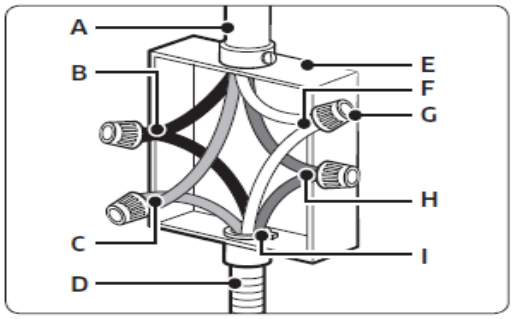

1. Connect the 2 black wires (B) together using a UL listed wire connector.
2. Connect the 2 red wires (C) together using a UL listed wire connector.
3. Untwist white wire from green (or bare) ground wire coming from the oven.
4. Connect the 2 white wires (F) together using a UL listed wire connector.
5. Connect the green (or bare) ground wire (H) from the oven cable to the green (or bare) ground wire (in the junction box) using a UL listed wire connector.
6. Install junction box cover.

A. Cable from home power supply
B. Black wires (normally L1)
C. Red wires (normally L2)
D. 4-wire flexible conduit from oven
E. Junction box
F. White wires (normally N-neutral)
G. UL listed wire connectors
H. green wires (normally G-ground)
I. UL listed or CSA approved conduit connector

⑦ Procure the proper installation materials

Prepare to install the oven

Phillips Screwdriver

Drill

Junction Box

Wire Nuts

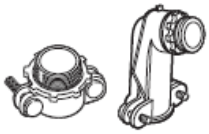

3/4" Conduit Connector

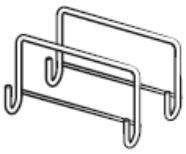

Install Handle (only for double oven)

6 screws (M4 L16)
6 Wood Screws For Mounting (4 needed for installation and 2 extra's)

30-Inch Double Wall Oven

DOB30M977DS / DOC30M977DM

General	Oven Color	Silver STSS / Graphite STSS
	Installation Type	Flush
	Handle	Fixed Bar Type
	Cooking Mode (20ea)	Bake, Broil, Convection Bake, Convection Roast Convection Broil, Dual Four Part Pure Convection Pure Conv.Sear, Steam Bake, Steam Roast Keep Warm(3Hr), Proof 1, Proof 2, Stone Bake Dehydrate, Chef Mode(15ea), InstantHeat
	Oven Rack	2 GlideRack + 1 Wire Rack (@ 1 Cavity)
	Rack Position	6
	Interior Lights	BrightVue™ TOP(2 Halogen) + Door(2 LED)
	SoftShut™ Door	●
	Cleaning Method	Self Clean (2/3/5hr)
		Steam Clean(GreenClean™) – Only Upper Oven
Control	Display	7” Touch LCD
	Electronic Clock	●
	Child Lock	●
Oven Performance (Upper/Lower)	Bake(Hidden)	3,300W
	Broil	4,400W
	Convection Heater	1,300W + 1,300W
	Steam element	500W / 120V (Only Upper Oven)
Smart	Wi-Fi (LTE) Module	●

Total Capacity (cu. ft.)	4.8 + 4.8
Product Width	29 7/8"
Product Height	51 1/2"
Product Depth	24 1/2"
Cutout Width	30 1/4"
Cutout Height	50 1/4"
Cutout Depth	24 7/8"
Watts(W)	11.2KW
Electrical Supply	240VAC/50A/60Hz
Power Cord	Fixed Connection (No Plug Type)
Net Weight (lbs.)	346.8 lbs. (157.3Kg)

※ Cutout Dimensions are for Flush Cabinet

Product Specification

30-Inch ~~Double~~ Single Wall Oven

DOB30M977DS / DOC30M977DM

General	Oven Color	Silver STSS / Graphite STSS
	Installation Type	Flush
	Handle	Fixed Bar Type
	Cooking Mode (20ea)	Bake, Broil, Convection Bake, Convection Roast Convection Broil, Dual Four Part Pure Convection Pure Conv.Sear, Steam Bake, Steam Roast Keep Warm(3Hr), Proof 1, Proof 2, Stone Bake Dehydrate, Chef Mode(15ea), InstantHeat
	Oven Rack	2 GlideRack + 1 Wire Rack (@ 1 Cavity)
	Rack Position	6
	Interior Lights	TOP(2 Halogen) + Door(2 LED)
	Soft Close Door	●
	Cleaning Method	Self Clean (2/3/5hr)
		Steam Clean(GreenClean™) – Only Upper Oven
Control	Display	7” Touch LCD
	Electronic Clock	●
	Child Lock	●
Oven Performance (Upper/Lower)	Bake(Hidden)	3,300W
	Broil	4,400W
	Convection Heater	1,300W + 1,300W
	Steam element	500W / 120V (Only Upper Oven)
Smart	Wi-Fi (LTE) Module	●
	Bluetooth	-

Total Capacity (cu. ft.)	4.8
Product Width	29 7/8"
Product Height	28 7/8"
Product Depth	24 1/2"
Cutout Width	30 1/4"
Cutout Height	29"
Cutout Depth	24 7/8"
Watts(W)	5.6KW
Electrical Supply	240VAC/30A/60Hz
Power Cord	Fixed Connection (No Plug Type)
Net Weight (lbs.)	213.8lbs (97Kg)

※ Cutout Dimensions are for Flush Cabinet